Exhibit G

City of Fresno
Planning and Development Department

Conditions of Approval
January 21, 2026

Rezone Application No. P25-01778
Development Permit Application No. P25-01774

Valeria Ramirez, Planner II

Rezone Application No. P25-01778 requests authorization to remove one (1) of three (3) existing conditions of zoning which would permit a Day Care Center use on the subject property.

Development Permit Application No. P25-01774 requests authorization to construct a ±17,880 square-foot single-story adult day care/healthcare facility (PACE) that will provide medical services to persons aged 55 and older and ±1.17 acres of site improvements.

PART A – ITEMS TO BE COMPLETED

The following items are required before the issuance of building permits, prior to occupancy, and/or commencement of land activity:

Planner to check when completed		
☐	1.	Development shall take place in accordance with Exhibits A, E, F, L-1, L-2, and O-1 through O-3, dated July 25, 2025. If any, transfer all red line notes, comments, conditions, etc. to the corrected exhibit(s) and **submit to planner at least 15 days prior to sign off.**
☐	2.	A Lot Line Adjustment shall be recorded prior to issuance of a Building Permit.
☐	3.	Detail all security measures on the Operational Statement (Exhibit O-1 through O-3).
☐	4.	Update Development Permit & Rezone application numbers on the site plan (Exhibit A). Development Permit: P25-01774 Rezone: P25-01778
☐	5.	Dimension the adjacent streets and provide their designations on the site plan (Exhibit A). North Cedar Avenue: Arterial East Hampton Way: Local
☐	6.	Identify the location and size of existing water and sewer lines on the site plan (Exhibit A).
☐	7.	Pursuant to FMC Section 15-2006.F.1, a fence up to four feet in height may be installed within any required front yard setback. Fences must be open a

		minimum of 80 percent (e.g., no more than 20 percent opaque) to allow for the passage of light and air. The proposed decorative fence does not comply with this requirement. Please revise the plans to show compliance with this requirement.
☐	8.	Add as a note: Pursuant to FMC Section 15-2011, all exterior mechanical and electrical equipment shall be screened or incorporated into the design of buildings so as not to be visible from major streets, highways, passenger railways, or abutting Residential Districts.
☐	9.	Add as a note: Pursuant to FMC Section 15-2015, all exterior doors, during the hours of darkness, shall be illuminated with a minimum of 0.5 foot-candle of light.
☐	10.	Pursuant to Table 15-2015.B.3, light fixtures have a maximum height limitation of 25 feet within 100 of any street frontage, and 30 feet in any other location. Depict the height of the proposed site light (Keynote #14) to verify compliance with this standard.
☐	11.	Add as a note: Pursuant to FMC Section 15-2508, lights shall be placed to deflect light away from adjacent properties and public streets, and to prevent adverse interference with the normal operation or enjoyment of surrounding properties. Direct or sky-reflected glare from floodlights shall not be directed into any other property or street. Except for public street lights and stadium lights, no light, combination of lights, or activity shall cast light onto a residentially zoned property, or any property containing residential uses, exceeding one-half foot-candle.
☐	12.	All proposed signs shall be processed and permitted under a separate Sign Permit Application.

PART B – OTHER AGENCY COMMENTS AND CONDITIONS REQUIREMENTS

Planner to check when completed		
☐	1.	**Airports:** Airspace review required for any objects (temporary or permanent) over 100 feet tall.
☐	2.	**Building & Safety Services:** The items below require a separate process with additional fees and timelines, in addition to the Development Permit Application process. Be advised the following are preliminary comments based on the drawings submitted to the Planning and Development Division. a. Parcel merger shall be completed prior to issuance of “Certificate of Occupancy” for the proposed building.

		b. Building, Grading and Utility plans are required to be submitted to the Building and Safety Services Division for approval and permits for the proposed project. i. All construction documents shall be designed, stamped and signed by a licensed architect/engineer. ii. Provide a complete code analysis for the proposed building. iii. I-4 Occupancies shall meet all requirements of CBC section 436. Rooms used for Group I-4 adult day care on the first floor shall have one exit door directly to the exterior.
☐	3.	**Department of Public Utilities (Planning & Engineering, Solid Waste, Water):** Comply with all requirements within the attached Department of Public Utilities memorandum and redlined site plan dated August 14, 2025.
☐	4.	**Fire Department:** All additional/revised submittals are performed electronically through the Accela Program (FAASTER portal). You must submit the following documentation: 1) Provide copy of the original submittals (drawings, calculations, and supporting documents) including mark-ups from the plan reviewers who worked on your documents. 2) Provide a complete set of revised drawings, calculations, and supporting documents addressing plan check comments (all changes shall be clouded or noted with a delta). 3) Provide a detailed typed response to each item listed in the plan check correction comments document. If you have additional questions regarding additional/revised submittals, please contact the Building Department. If there are questions regarding FFD Development Policies, you may access them at: https://www.fresno.gov/fire-training/manuals-and-forms/. Fire Department correction items require approval from Fire Department staff. Correction items approved by any person other than sworn Fire Department staff are invalid. All revisions to plans shall be called out with a cloud or delta. a. Unless otherwise approved, all fire sprinkler systems shall be installed with remote Post Indicator Valves and Fire Department Connections. PIVs and FDC shall be a minimum of 40 feet away from the building serviced, and no more than 40 feet from a Fire Department access road. FFD Policy No. 405.003 and 405.025. Note that if the gate is ever extended to surround the building, a new site plan will be required to be submitted and approved through the City of Fresno Planning Division.

		Fresno County Public Health: Recommended Conditions of Approval: Regarding Proposed Medical/Dental Services: • The applicant will be required to obtain a Medical Waste Permit from the California Department of Health Services, Medical Waste Management Program. Call (916) 449-5671 for more information. • Prior to occupancy, the applicant must register any radiation diagnostic equipment with the California Department of Public Health, Radiologic Health Branch. Contact the registration staff at (916) 327-5106 for more information or visit the webpage at: https://www.cdph.ca.gov/Programs/CEH/DRSEM/Pages/RHB-X-ray/Registration.aspx. Regarding Dining/Day and Warming Pantry Areas Indicated on Site Plan: • Prior to issuance of building permits, applicant shall contact Fresno County Department of Public Health, Environmental Health Division, Consumer Food Protection Program at (559) 600-3357 to provide more information on the proposed process for providing/serving meals to individuals/patients at PACE facility.
	5.	Additional Recommended Conditions of Approval: • If the applicant proposes to use and/or store hazardous materials and/or hazardous wastes, they shall meet the requirements set forth in the California Health and Safety Code (HSC), Division 20, Chapter 6.95, and the California Code of Regulations (CCR), Title 22, Division 4.5. Any business that handles a hazardous material or hazardous waste may be required to submit a Hazardous Materials Business Plan pursuant to the California Health and Safety Code (HSC), Division 20, Chapter 6.95, Section 25507 (http://cers.calepa.ca.gov/). Contact the Fresno County Hazmat Compliance Program at (559) 600-3271 for more information. • Should any underground storage tank(s) be found during construction, the applicant shall apply for and secure an Underground Storage Tank Removal Permit from the Fresno County Department of Public Health, Environmental Health Division. Contact the Fresno County Hazmat Compliance Program at (559) 600-3271 for more information. • As a measure to protect ground water, all water wells and/or septic systems that exist or have been abandoned within the project area should be properly destroyed by an appropriately licensed contractor. The proposed construction project has the potential to expose nearby residents and businesses to elevated noise levels; consideration should be given to the City of Fresno Municipal Code.

☐	6.	**Fresno Metropolitan Flood Control District (FMFCD):** Comply with all requirements within the attached FMFCD memorandum dated August 15, 2025.
☐	7.	**Fresno Irrigation District (FID):** Comply with all requirements within the attached FID memorandum dated August 14, 2025.
☐	8.	**Land Division Impact Fees:** Comply with all requirements within the attached Development and Impact Fees Estimate memorandum dated August 7, 2025.
☐	9.	**Fresno Unified School District (FUSD):** Comply with all requirements within the attached FUSD memorandum dated July 30, 2025.
☐	10.	**Department of Public Works (Traffic Planning, Street Tree Requirements and Community Facilities District (CFD)):** Comply with all requirements within the attached Department of Public Works memorandum dated August 18, 2025, and redlined exhibit dated July 25, 2025.

PART C – PLANNING DEVELOPMENT CODE STANDARDS

1. **Density and Massing Development Standards:** Development shall take place in accordance with FMC Section 15-1303.
2. **Site Design Development Standards:** Development shall take place in accordance with FMC Section 15-1304.
3. **Parking and Loading:** All parking shall be provided in accordance with the City of Fresno Parking Manual and in accordance with FMC, Chapter 15, Article 24. Provide short-term bike parking, as required pursuant to FMC Section 15-2429.
4. **Landscaping:**
   a. Landscaping must be in place before issuance of the certificate of occupancy. A Hold on Occupancy shall be placed on the proposed development until such time that landscaping has been approved and verified for proper installation by the Development Services Division. **(include this note on the site plan and landscape plans)**
   b. New landscaping shall have an automatic irrigation system designed to provide adequate and efficient coverage of all plant material. Irrigation systems shall comply with the requirements of the California Green Building Standards Code and/or the California Model Water Efficient Landscape Ordinance and/or the California Plumbing Code, as may be amended.
   c. Additional landscaping requirements including landscape plan requirements, landscape design standards, and general landscaping standards can be found in

FMC Chapter 15, Article 23.

5. **Fencing:** All fencing, walls, and hedges shall be provided and installed in accordance with FMC Section 15-2006.

PART D – PLANNING – OTHER REQUIREMENTS

1. Development shall take place in accordance with the policies of the Fresno General Plan, McLane Community Plan and with the planned land use designation of Employment – Office and the underlying zone district, as well as all other applicable sections of the Fresno Municipal Code (FMC).
2. Development shall take place in accordance with the O/cz (*Office/conditions of zoning*) zone district and all other applicable sections of the Fresno Municipal Code.
3. Comply with the operational statement dated July 25, 2025.
4. Comply with the mitigation measures of the Project Specific Mitigation Monitoring and Reporting Program checklist prepared for the related Mitigated Negative Declaration dated December 12, 2025 (SCH No. 2025050744).
5. Conditions of zoning were placed on the site in 2007 with approval of Rezone Application No. R-06-48. This application is subject to compliance with the conditions of zoning for Rezone Application No. R-06-48 and the removal of Condition of Zoning No. 1, as approved with Rezone Application No. P25-01778.
6. Development shall comply with the City of Fresno Parking Manual, California Building Code, and American with Disabilities Act requirements.
7. Property development standards and operational conditions are contained in FMC Articles 13 (Employment Districts), 20 (General Site Requirements), 23 (Landscape), 24 (Parking and Loading), and 25 (Performance Standards). Any project revisions, development and operation must comply with these property development standards and operational conditions.
8. Development shall take place in accordance with the "General Notes and Requirements for Entitlement Applications" listed below, if applicable.

PART E – MISCELLANEOUS REQUIREMENTS AND GENERAL NOTES

Not all notes and requirements listed below are applicable to all projects.

1. Approval of this special permit may become null and void in the event that development is not completed in accordance with all the conditions and requirements imposed on this special permit, the Zoning Ordinance, and all Public Works Standards and Specifications. This special permit is granted, and the conditions imposed, based upon the Operation Statement provided by the applicant. The Operation Statement is material to the issuance of this special permit. Unless the conditions of approval specifically require operation inconsistent with the Operation Statement, a new or revised special permit is required if the operation of this establishment changes or becomes inconsistent with the Operation Statement. Failure to operate in accordance with the conditions and requirements imposed may result in revocation of the special permit or any other enforcement remedy available under the law. The Planning and Development Department shall not assume responsibility for any deletions or omissions resulting from the special permit review process or for

additions or alterations to construction plans not specifically submitted and reviewed and approved pursuant to this special permit or subsequent amendments or revisions.

2. Approval of this special permit shall be considered null and void in the event of failure by the applicant and/or the authorized representative, architect, engineer, or designer to disclose and delineate all facts and information relating to the subject property and the proposed development including, but not limited to, the following:

    a. All existing and proposed improvements including but not limited to buildings and structures, signs and their uses, trees, walls, driveways, outdoor storage, and open land use areas on the subject property and all of the preceding which are located on adjoining property and may encroach on the subject property; and,

    b. Existing and proposed grade differentials between the subject property and adjoining property zoned or planned for residential use.

3. No land shall be used, and no structure shall be constructed, occupied, enlarged, altered, demolished, or moved in any zoning district, except in accordance with the provisions of this Code. Specific uses of land, buildings, and structures listed as prohibited in any zoning district are hereby declared to be detrimental to the public health, safety, and welfare.

4. Development shall take place in accordance with the Standards, Specifications, and Standard Drawings of the City of Fresno Public Works Department.

5. Development shall take place in accordance with all city, county, state and federal laws and regulations.

6. Owners and persons having ownership interest in businesses operating in the City of Fresno (including leasing out any commercial or industrial property, or renting out four or more dwelling units) are required by the FMC to obtain a Business Tax Certificate. Contact the City of Fresno Finance Department's Business Tax Division at (559) 621-6880 for more information. Information and an application form is available at the following website: Click Here

7. All proposed building(s) or structure(s) constructed on the property must comply with the prevailing California Building Code Standards.

8. Any building modifications and/or additions not included with this application are not approved with this special permit and would be subject to a new special permit.

9. A permit granted under the FMC shall automatically expire if it is not exercised or extended within three years of its issuance. Refer to section 15-5013, Expiration of Planning Entitlements, for more information about the exercise of rights.

FENCES/WALLS, LANDSCAPING, PARKING

10. Nothing in the Development Code shall be deemed to prohibit the erection of temporary fencing around construction sites in compliance with the Building Code and other applicable provisions of the FMC.

11. Future fences shall be reviewed and approved by the Planning and Development Department prior to installation.

12. Fences, hedges, and walls shall be maintained in good repair, including painting, if required, and shall be kept free of litter or advertising. Where hedges are used as screening, trimming or pruning shall be employed as necessary to maintain the maximum allowed height. Fences shall be maintained and shall stand upright and shall not lean.

13. All planting and other landscape elements shall be permanently maintained in good growing condition. Such maintenance shall include, where appropriate, pruning, mowing, weeding, cleaning, fertilizing, and regular watering. Wherever necessary, plantings shall be replaced with other plant materials to ensure continued compliance with applicable landscaping requirements. Yards shall be maintained free of refuse, debris, rubbish, or other accumulated matter and/or materials, and shall be maintained clean. Grass shall not exceed six inches in height.
14. New landscaping shall have an automatic irrigation system designed to provide adequate and efficient coverage of all plant material. Irrigation systems shall comply with the requirements of the California Green Building Standards Code and/or the California Model Water Efficient Landscape Ordinance and/or the California Plumbing Code as may be amended.

15. Trees shall be maintained by property owners to be free from physical damage or injury arising from lack of water, chemical damage, accidents, vandalism, insects, and disease. Any tree showing such damage shall be replaced with another tree.

16. No tree for which a Tree Removal Permit is required shall be removed until all conditions of the permit have been satisfied and the decision has become final. In addition, tree(s) approved for removal in conjunction with a development application shall not be removed before the issuance of a Building Permit or unless all of the conditions of approval of the development applications are satisfied.

17. The review authority shall issue a Tree Removal Permit if any of the following general criteria is met:

    a) The tree(s) is irreparably diseased or presents a danger of falling that cannot be controlled or remedied through reasonable preservation and/or preventative procedures and practices so that the public health or safety requires its removal.
    b) b) The tree(s) can potentially cause substantial damage to existing or proposed main structure(s) (e.g. dwellings, other main structures, or public infrastructure) or interfere with utility services and cannot be controlled or remedied through reasonable relocation or modification of the structure or utility services.

    c) The retention of the tree(s) restricts the economic enjoyment of the property or creates an unusual hardship for the property owner by severely limiting the use of the property in a manner not typically experienced by owners of similarly zoned and situated properties, and the applicant has demonstrated to the satisfaction of the Review Authority that there are no reasonable alternatives to preserve the tree(s).

18. Landscaping must be in place before issuance of the certificate of occupancy. A Hold on Occupancy shall be placed on the proposed development until such time that landscaping has been approved and verified for proper installation by the Current Planning Division. (Include this note on the landscape plan.)

19. Future tenant improvements shall be reviewed and approved by the Planning and Development Department to ensure that adequate off-street parking is provided.

20. Trees required for parking lots are in addition to trees required elsewhere on the site as prescribed in other sections of the FMC.

21. Parking lots, including landscaped areas, driveways, and loading areas, shall be maintained free of refuse, debris, or other accumulated matter and shall be kept in good repair at all times.

22. Parking lots, including landscaped areas, driveways, and loading areas, shall be maintained free of refuse, debris, or other accumulated matter and shall be kept in good repair at all times.

23. All accessible stalls shall be marked with the international symbol of spaces and a warning that vehicles in violation of Section 10-1017 of the FMC shall be towed away. The international symbol and tow-away warning shall be posted conspicuously on seven-foot poles. (Include this note on the site plan.)

24. Applicants are encouraged to provide shared vehicle and pedestrian access between adjacent properties for convenience, safety, and efficient circulation. A joint access covenant shall be required. (Include this note on the site plan.)

25. All general standards of Section 15-2015 of the FMC shall apply when lighting is provided to illuminate parking, sales or display areas. Depict all proposed lights on the site plan.

26. Bicycle parking spaces shall be supplied according to Table 15-2429-D: Required On-Site Bicycle Parking Spaces of the FMC. Each bicycle parking space shall be a minimum of 30 inches in width and eight feet in length and shall be accessible without moving another bicycle. At least 30 inches of clearance shall be provided between bicycle parking spaces and adjacent walls, poles, landscaping, street furniture, drive aisles, and pedestrian ways and at least five feet from vehicle parking spaces to allow for the maneuvering of bikes. Overhead clearance shall be a minimum of seven feet. A minimum five-foot aisle between each row of bicycle parking shall be provided for bicycle maneuvering beside or between each row, when multiple rows are proposed. Bicycle parking spaces shall not encroach into pedestrian ways, landscaped areas, or other required open spaces, and shall be located proximal to structures.

27. All general provisions of Section 15-2403 of the FMC shall apply to all parking areas.

28. The parking lot is required to meet the *City of Fresno's Parking Manual, Public Works Standards (P-21, P-22, and P-23) and Specifications*. Parking must also comply with the California Building Code's accessibility requirements and the Fire and Solid Waste

Department's minimum turning templates. Contact the Planning and Development Department for Parking Manual questions.

SIGNAGE

29. All future signs shall be architecturally compatible with the proposed building(s). Provide a set of drawings, with descriptive information, including, materials, design and colors to allow for a preliminary assessment of the future signage. It is recommended that you provide a copy of the signage early in the project process to allow for staff comment.

30. Signs, other than directional signs, if applicable, are not approved for installation as part of this special permit. (Include this note on the site plan.)

31. All proposed signs shall conform to the current sign ordinance. The submittal checklist for signs is available online at: Click Here

32. Window signs limited to the hours of operation, address, occupancy, and emergency information, subject to the following standards:

    a) Operational windows signs shall not be mounted or placed on windows higher than the second story.

    b) The maximum area of exempt window signage shall not exceed three square feet in area.

33. Banners, streamers, moving signs, and inflatables (including air dancers, balloons, and similar objects) are allowed subject to Temporary Use Permit approval for establishments within Non-Residential Districts. Signs of this type do not count toward total maximum sign area. No sign per this section shall be displayed for more than 30 days, and a period of 30 must lapse before displaying another sign. Signs shall not be displayed for more than 60 total days during a calendar year.

34. Every sign displayed within the city, including exempt signs, shall be maintained in good physical condition and shall comply with adopted regulations. All defective or broken parts shall be replaced. Exposed surfaces shall be kept clean, in good repair, and painted where paint is required.

MISCELLANEOUS

35. Noise levels shall not exceed the decibel levels described in Section 15-2506 of the FMC at any time, measured at the nearest subject property line.

36. No vibration shall be produced that is transmitted through the ground and is discernible without the aid of instruments by a reasonable person at the lot lines of the site. Vibrations from temporary construction, demolition, and vehicles that enter and leave the subject parcel (e.g., construction equipment, trains, trucks, etc.) are exempt from this standard.

37. Lights shall be placed to deflect light away from adjacent properties and public streets, and to prevent adverse interference with the normal operation or enjoyment of surrounding

properties. Direct or sky-reflected glare from floodlights shall not be directed into any other property or street. Except for public streetlights and stadium lights, no light, combination of lights, or activity shall cast light onto a residentially zoned property, or any property containing residential uses, exceeding one-half foot-candle.

38. No use shall be operated such that significant, direct glare, incidental to the operation of the use is visible beyond the boundaries of the lot where the use is located. Windows shall not cause glare that may disrupt adjoining properties, traffic on adjacent streets, etc. Glare or heat reflected from building materials shall be mitigated so as to not disrupt surrounding properties.

39. The address listed in the conditions of approval is the 'Official Address' given to the building. If you would like separate suite or unit numbers for a building, provide a floor plan and contact the City of Fresno Planning and Development Department for 'Official Addresses'. Only those addresses assigned by the City of Fresno will be recognized as 'Official Addresses'. The United States Post Office will only recognize addresses assigned by the City of Fresno. If a non-official address is given to a building and or/separate suites, the City of Fresno has the authority to charge a fee and have those addresses corrected. In addition, the United States Post Office will cease mail delivery to those addresses that are not 'Official Addresses'.

40. All projects, including projects that involve less than one acre of property, are required to comply with the City of Fresno's Urban Storm Water Quality Management and Discharge Control Ordinance, FMC Chapter 6, Article 7 (Sections 6-701 et seq.)

    When a project involves one acre or more of construction activity (including, but not limited to, grading) the developer is required to obtain a stormwater discharge permit for construction, with a Notice of Intent (NOI) filed **prior to** commencement of any grading construction activity. Contact the Fresno office of the California Regional Water Quality Control Board at (559) 445-6281 regarding the required NOI and stormwater discharge permit. Additional information on California's construction stormwater regulation may be obtained from the Water Board via the internet:

    www.waterboards.ca.gov/water_issues/programs/stormwater/construction.shtml

    Helpful information for preparing and implementing stormwater pollution prevention plans may also be obtained from the California Stormwater Quality Association via its website, www.casqa.org

    When a project involves specified nonresidential activities (certain commercial and industrial activities), an ongoing industrial stormwater discharge permit is also required. Contact the Fresno office of the California Regional Water Quality Control Board at (559) 445-6281 to find out whether your project/business requires an industrial stormwater discharge permit, and to obtain details on securing this permit. Additional information on industrial stormwater regulations may be obtained from the following website: *www.waterboards.ca.gov/water_issues/programs/stormwater/industrial.shtml*,

    The California Stormwater Quality Association has additional information on preparing stormwater pollution prevention plans for industrial activities (*www.casqa.org*).

41. Screen all roof-mounted equipment from the view of public rights-of-way. Depict all mechanical equipment on site plan and elevations.

42. Connection to a municipal water system is required unless approved measures are included in the project conditions of approval for an alternative water supply.

43. Connection to a municipal City of Fresno sewer system is required unless approved measures are included in the project conditions for alternative wastewater treatment facilities.

44. City of Fresno water and sewer connection charge obligations applicable to this project will be computed during the building construction plan check process and shall be payable at time of issuance of building permit unless other arrangements have been approved to defer such payments to a later date. For information relating to water and sewer service requirements and connection charges, contact Frank Saburit at (559) 621-8797.

45. Open street cuts are not permitted; all utility connections must be bored.

46. CROSS-CONNECTION CONTROL. A backflow prevention device may be required on the water service. Contact the Department of Public Utilities, Water Division (559) 621-5300 for requirements relating to approved devices, locations, testing and acceptance. This requirement must be satisfied prior to final occupancy.

47. This project was reviewed by the Fire Department only for requirements related to water supply, fire hydrants, and fire apparatus access to the building(s) on site. Review for compliance with fire and life safety requirements for the building interior and its intended use are reviewed by both the Fire Department and the Building and Safety Section of the Planning and Development when a submittal for building plan review is made as required by the California Building Code by the architect or engineer of record for the building.

48. Open storage (outside an enclosed building) shall be limited to vehicles, boats, recreational vehicles, and trailers. Outdoor storages areas shall be screened from public view by building façades or solid fences. At the discretion of the Review Authority, the treatment of the ground surface of the open storage area may be gravel or other materials as prescribed by the San Joaquin Valley Air Pollution Control District, the Public Works Department, the Fire Department, and the Fresno Metropolitan Flood Control District. All open storage must be depicted on the site plan and described in operational statement. If it is not, it is not allowed on the site.

49. If video surveillance cameras are required or installed, provide signs under the surveillance cameras which notify the public that the subject property is monitored by video surveillance.

FEES

(Not all fees will be applicable to all projects.
Please reach out to Frank Saburit at (559) 621-8797 for fee questions.)

50. NOTICE TO PROJECT APPLICANT: In accordance with the provisions of Government Code Section 66020(d)(1), the imposition of fees, dedication, reservations or exactions for this project are subject to protest by the project applicant at the time of approval or

conditional approval of the development or within 90 days after the date of imposition of fees, dedications, reservation, or exactions imposed on the development project. This notice does not apply to those fees, dedications, reservations, or exactions which were previously imposed and duly noticed; or, where no notice was previously required under the provisions of Government Code Section 66020(d)(1) in effect before January 1, 1997.

51. CITYWIDE DEVELOPMENT IMPACT FEES

a) Traffic Signal Charge (FMC Section 12-4.1101 to 12-4.1103) This project shall pay its Traffic Signal Mitigation Impact Fee at the time of building permit based on the trip generation rate(s) as set forth in the latest Master Fee Schedule. Refer to the adopted Master Fee Schedule for fee rate. This fee shall be paid at time of building permit.

b) Fire Facilities Fee (FMC Section 12-4.901 to 12-4.906) (based on building square footage, or residential units)

c) Police Facilities Fee (FMC Section 12-4.801 to 12-4.806) (based on building square footage, or residential units).

d) Parks Facilities Fee (FMC Section 12-4.701 to 12-4.706) (based on the number of residential units)

52. CITYWIDE REGIONAL AND NEW GROWTH MAJOR STREET IMPACT FEES (FMC Section 12-4.1006).

a) Street Impact Fees shall be due and payable at the time of building permit issuance unless otherwise required by State law.
b) Street Impact Fees will be a condition on all development entitlements granted.

53. FRESNO COUNTY FACILITY IMPACT FEE
Fresno County adopted a Facilities Impact Fee, but the requirement to pay this fee was subsequently suspended by Fresno County. If the fee has been reinstated at the time of issuance of building permits for this project, or an alternative fee system has been adopted by Fresno County, proof of payment or payment of this fee will be required for issuance of building permits.

54. REGIONAL TRANSPORTATION MITIGATION FEE (RTMF)
Pay the RTMF fee to the Joint Powers Agency located at 2035 Tulare Street, Suite 201, Fresno, CA 93721; (559) 233-4148, ext. 200; www.fresnocog.org. Provide proof of payment or exemption prior to issuance of certificate of occupancy.

55. SCHOOL FEES
School fees must be paid, if required, prior to the issuance of building permits. Contact the applicable school district to obtain fee amount. Provide proof of payment (or no fee required) prior to the issuance of building permits.

56. FRESNO METROPOLITAN FLOOD CONTROL DISTRICT (FMFCD) FEES

a) A FMFCD Development Fee is required for review of proposed development projects, including applications for plan amendments, rezones, special permits,

subdivisions, and grading plans. This fee is based on project acreage and must be paid directly to FMFCD in order for that agency to review projects and provide a Notice of Requirements. For more information, contact the FMFCD at (559) 456-3292.

b) FMFCD drainage fees are due, if required, prior to issuance of building permits and are payable at the rate in place at the time of building permit issuance. Unpaid drainage fee obligations that were unpaid for a prior project at the site of a new project must be satisfied by the developer of the new project. Drainage fees may be paid at the Planning and Development Department prior to, or at the time of building permit issuance. They may also be paid directly to FMFCD, and proof of payment provided to the City, in order to obtain construction permits.

57. SEWER CONNECTION CHARGES (FMC Section 6-304(a)). The following sewer connection charges may be required and will be payable at the fee rate listed in the Master Fee Schedule at the time payment is due. New sewer connection charges adopted by the Council prior to the issuance of building permits may also be applied.
    a) Lateral Sewer Charge (based on property frontage to a depth of 100')
    b) Oversize Sewer Charge (based on property frontage to a depth of 100')
    c) Wastewater Facilities Charge
    d) Trunk Sewer Charge

    Effective January 9, 1999, Ordinance No. 98-97 also amended certain sewer connection charges. FMC Article 15, Section 12 provides property owners the incentives and deletes certain sewer connection charges pursuant to the Simple Tiered Equity Program (STEP) and the Employment Development Program (EDP). For additional information on the STEP and EDP, contact the Department of Public Utilities, Administration Division at (559) 621-8600.

58. WATER CONNECTION CHARGES: (FMC Sections 6-507 to 6-513). The following water connection charges may be required and will be payable at the fee rate listed in the Master Fee Schedule at the time payment is due. New water connection charges adopted by the Council prior to issuance of building permits may also be applied.
    a) Frontage Charge (based on property frontage)
    b) Service Charges (based on service size required by applicant)
    c) Meter Charges (based on service need)
    d) Water Capacity fee (based on size of meter)

59. Deferment of the payment of Citywide development impact fees for Fire, Police, Parks, Streets, and Traffic Signals is available for projects located within the Downtown Priority Areas in accordance with the provisions of City of Fresno Resolutions Nos. 2009-265 and 2010-19.

PUBLIC WORKS DEPARTMENT GENERAL NOTES
(to be added to the site plan)

60. Any survey monuments within the area of construction shall be preserved or reset by a person licensed to practice land surveying in the State of California.

61. Repair all damaged and/or off-grade concrete street improvements as determined by the Construction Management Engineer, prior to occupancy.

62. Two working days before commencing excavation operations within the street right-of-way and/or utility easements, all existing under-ground facilities shall have been located by underground services.

63. The performance of any work within the public street right-of-way requires a street work permit prior to commencement of work. All required street improvements must be completed and accepted by the City prior to occupancy.

64. Contact the Public Works Department, Traffic Engineering at (559) 621-8800, 10 working days prior to any offsite concrete construction.

65. For Standard Drawings Click Here

66. For Traffic Planning's website with useful links, additional notes, sample of legend, Parking Manual and Traffic Study Checklist Click Here.

67. Traffic Planning Checklist Click Here .

68. For Traffic Study questions please contact Jill Gormley at (559) 621-8792 or via email at Jill.Gormley@fresno.gov.

City of FRESNO

Development and Resource Management

2600 Fresno Street, Third Floor, Room 3043
Fresno, California 93721-3604
(559) 621-8003

Jennifer K. Clark, AICP, HDFP
Director

Date: August 12, 2025

To: Planning Staff
Development and Resource Management
Planning Department

From: Christian Mendez, Senior Plans Examiner
Development and Resource Management
Building and Safety Services Department

RE: Planning Application: P25-01774

ATTENTION:
The items below require a separate process with additional fees and timelines, in addition to the Development Permit Application process. Be advised the following are preliminary comments based on the drawings submitted to the Planning and Development Division.

1) Parcel merger shall be completed prior to issuance of "Certificate of Occupancy" for the proposed building.

2) Building, Grading and Utility plans are required to be submitted to the Building and Safety Services Division for approval and permits for the proposed project.

    a) All construction documents shall be designed, stamped and signed by a licensed architect/engineer.

    b) Provide a complete code analysis for the proposed building.

    c) I-4 Occupancies shall meet all requirements of CBC section 436.

        i) Rooms used for Group I-4 adult day care on the first floor shall have one exit door directly to the exterior.

Questions relative to these conditions may be directed to Christian Mendez at (559)621-8088 or Christian.Mendez@fresno.gov in the Building and Safety Services Department.

City of FRESNO

DEPARTMENT OF PUBLIC UTILITIES

MEMORANDUM

DATE: August 14, 2025

TO: VALERIA RAMIREZ – Planner II
Planning & Development Department – Current Planning

FROM: DENISE SORIA, MSCE, PE, Licensed Professional Engineer
Department of Public Utilities – Utilities Planning & Engineering

SUBJECT: DPU CONDITIONS OF APPROVAL FOR DEVELOPMENT PERMIT APPLICATION P25-01774 - COMM - GRANITE PARK PACE CENTER – APNs 438-220-01, 08, 09, and 10

Background

Development Permit Application P25-01774 pertains to a property located on the southeast corner of North Cedar Avenue and East Hampton Way. The applicant proposes to construct a 20,000 square-foot single-story adult day care/healthcare facility (Grace Park PACE Center) and 1.2 acres of site improvements. The facility will provide adult daycare that will include rehabilitation therapies, meals, and counseling services, along with other services.

The Project includes APNs 438-220-01, 438-220-08, 438-220-09, and 438-220-10, which are proposed to be merged into a single legal parcel through a Lot Line Adjustment.

General Requirements

1. Engineered improvement plans, prepared by a Registered Civil Engineer, if necessary, shall be submitted for Department of Public Utilities (DPU) review and approval.

2. All DPU facilities shall be constructed in accordance with the Department of Public Works standards, specifications, and policies.

3. Street easements and/or deeds shall be recorded prior to the approval of improvement plans.

4. A street work permit is required for any work in the Right-of-Way. Contact the Department of Public works at DPWPermits@fresno.gov or (559) 621-8800 for an encroachment/street work permit.

5. All underground utilities shall be installed prior to permanent street paving.

6. There is an existing 10-foot Public Utility Easement on the western boundary of the Project (APNs 438-220-01, and 438-220-10)

a. All public utility easements shall be clear and **unobstructed** by buildings or other structures. No fencing or wall shall either enclose or be located above water and sewer mains. The planting plan for any proposed landscape within the easement, shall be approved by the Director of the Department of Public Utilities or designee. No trees shall be located within 8 feet of the water and sewer mains. All water and sewer mains within an easement shall be clearly marked with signage above indicating the exact location and type of facility.

b. In the event the City damages any street, sidewalk, landscaping, or other improvements in exercising reasonable care, use and enjoyment of the public utility easement, the City shall not be obligated to restore any street, sidewalk, landscaping or other improvements so damaged. The City shall have the right, without notice and at the property owner's expense, to remove from the public utility easement any buildings, fence, tree, or other encroachment not approved by the Director of the Department of Public Utilities or designee. The public utility easement shall be maintained by the property owner free of any surface obstructions, except for those that may be approved by the Director of the Department of Public Utilities or designee, so that the City may have vehicular access to and through the public utility easement at all times.

c. Relocate all private facilities to the outside of the existing and/or proposed public utility easement(s).

7. **Attached to these DPU Conditions of Approval is a <u>preliminary review</u> of the Site Plan for the Project (as such Site Plan was available on Accela as of the date of these Conditions of Approval). Final Site Plan review will be conducted after an update based on these and other conditions for the Project.**

<u>Water Service Requirements</u>

The nearest water mains to serve the Project are a 6-inch water main located in East Hampton Way, and a 12-inch water main located in North Cedar Avenue. Water facilities are available to provide service to the Project subject to the following requirements.

1. On-site water facilities (including installation of private fire hydrants, if applicable) shall remain private.

2. Installation of new water service(s) and meter(s) shall be required **only** if the existing water service and meter at the property are not adequate and/or operational (**or** if new/additional water service(s) and meter(s) are requested by the applicant, in which case separate fees will apply to the new water service(s)).

   Note: At the time these DPU Conditions of Approval were written the applicant had not provided confirmation regarding the installation of new/additional water services.

3. The applicant shall be financially responsible for the abandonment of any unused water services previously installed to the property, if any.

4. Destroy existing on-site well(s), **if any**, in compliance with the State of California Well Standards, Bulletins 74-81 and 74-90, or current revisions, issued by the California Department of Water Resources, and City of Fresno Public Works Standard Drawing **W-45** and Standard Specifications Section **32**. The applicant shall comply with Fresno Municipal Code (FMC) Chapter 6, Article 4, as may be amended from time to time.

Landscape Requirements

1. Service, meter, and backflow prevention device are to be of the same size (inside diameter of pipe).

2. 1.5-inch and 2.0-inch meters to be installed per Public Works Standard Drawing **W-1**.

3. 1.0-inch meters to be installed per Public Works Standard Drawing **W-2**.

4. Backflow prevention device(s) to be installed per Public Works Standard Drawing **W-11**.

5. All Reduced Pressure Principle Backflow Prevention Assembly (i.e. RP devices) shall be tested and approved by a certified AWWA or ABPA tester within five days of installation. The property will not be given occupancy until all the RP devices are tested and documented with the City of Fresno Water Division. A list of certified testers can be obtained by calling (559) 621-5335.

6. DPU reserves the right to require an applicant to increase or decrease the size of a water meter for the Project to ensure that it is properly sized to accommodate water demands and to allow for accurate volumetric flow measurements at low- and high-flow conditions.

Water Supply Requirements

For APN 438-220-01, the Project is served by 1 (one) 2.0-inch water service and meter, for APN 438-220-08, the Project is served by 1 (one) 2.0-inch service and meter, for APN 438-220-09 the Project is served by 1 (one) 2.0-inch service and meter, and for APN 438-220-10, the Project is served by 2 (two) 0.75-inch services and meters, and 1 (one) 2.0-inch water irrigation service and meter. **See Water Service Requirements Item 2 above for reference to new and/or additional water service(s) and meter(s).**

1. The Water Capacity Fee charges for the installation of new water services and meters to serve the property.

    a. The Water Capacity Fee charge assessed to the applicant shall be based on the number and size of service connections and water meters required to serve the property.

b. If the total domestic, commercial, industrial, and irrigation water demands for the Project can be accommodated with the existing water services and meters, the applicant shall not be required to pay Water Capacity Fee charges.

c. If the total domestic, commercial, industrial, and irrigation water demands for the Project cannot be accommodated with the existing water services and meters, and an additional water meter or a larger water meter is required, the applicant shall be required to pay Water Capacity Fee charges.

d. If a larger water meter or fire service is required to accommodate the new, larger water demands, then the Water Capacity Fee charge shall be calculated by subtracting the Water Capacity Fee charge associated with the existing water services and meters from the Water Capacity Fee charge associated with the larger water meter size required for the Project.

e. The Water Capacity Fee charges by meter size are defined in the City's Master Fee Schedule (MFS).

f. The City reserves the right to require an applicant to increase or decrease the size of a water meter for the Project to ensure that it is properly sized to accommodate fire protection requirements and to allow for accurate volumetric flow measurements at low- and high-flow conditions.

2. The applicant shall be required to pay all other water-related fees and charges in accordance with the City's MFS and FMC.

Sewer Service Requirements

The nearest sanitary sewer mains available to serve the Project are an 8-inch sanitary sewer main located in East Hampton Way, and a 10-inch sanitary sewer main located in North Cedar Avenue. Sanitary sewer facilities are available to provide service to the Project subject to the following requirements:

1. On-site sanitary sewer facilities shall remain private.

2. Installation of a new sewer service branch(es) shall be required **only** if the existing sewer branch (sewer lateral) is not operational and/or adequate to serve the proposed development (**or** if new/additional sewer services are requested by the applicant, in which case separate fees will apply to the new/additional sewer service(s)).

   Note: At the time these DPU Conditions of Approval were written the applicant had not provided confirmation regarding the installation of new/additional sanitary sewer services.

3. The applicant shall be financially responsible for the abandonment of any unused

sewer services previously installed to the property, if any.

4. All existing on-site private septic systems (including septic tanks), **if any**, shall be destroyed and abandoned in compliance with the State of California standards, Fresno County standards, and City of Fresno standards, as may be amended from time to time. All sewer connections and sewer main extensions shall comply with FMC Section 6-303(a), as may be amended from time to time.

Sanitary Sewer Fees

The following Sewer Connection Charges are due and shall be paid for the Project (if not previously paid with the existing sewer service at the property, or if a new/additional sewer service is requested by the applicant). **See Sewer Service Requirements Item 2 above for reference to new and/or additional sewer service(s).**

1. Lateral Sewer Charge.

2. Oversize Sewer Charge.

3. Wastewater Facility Sewer Charge (Non-Residential).

4. Upon connection of this Project to the City Sewer System the owner shall be subject to payment of Sewer Facility Charges per FMC Sections 6-304 and 6-305. Sewer Facility Charges consist of two components: A Wastewater Facilities Charge and Trunk Sewer Charge, where applicable.

5. Sewer Facility Charges are collected after occupancy on a monthly basis, based on metered usage (water or sewer effluent). The applicant may contact the Department of Public Utilities/Wastewater-Environmental Control at (559) 621-5153 to receive an estimated cost of the Sewer Facility Charges applicable to the Project (based on a constant sewer discharge and loading (Biochemical Oxygen Demand [BOD] and Total Suspended Solids [TSS] levels anticipated) at the current rates in effect at that time, per City of Fresno MFS. The applicant shall provide data regarding estimated sewer discharge rates (flow) and loading (BOD/TSS levels) required for calculating the estimated charges.

Solid Waste Service Requirements

The following are Solid Waste Service Requirements for the purpose of establishing City solid waste service policies for office/commercial space. These service requirements apply to all office/commercial complexes within the City of Fresno. Except as otherwise noted, the applicant shall comply with FMC Chapter 6, Article 2, as may be amended from time to time.

1. This location is serviced by a Commercial Solid Waste Franchisee. For service

information, please contact Mid Valley Disposal at (559) 237-9425.

2. All office/commercial complexes are required to subscribe for recycling services. Recycling services may be provided by the City of Fresno or any private recycling service provider. Recycling services must include, at the minimum, cardboard, newspaper, paper, glass, plastics, beverage containers, and metal recycling.

3. All trash and recyclable material must be placed in approved containers. At no time may trash and recyclable material be placed on the ground or pavement.

4. Senate Bill (SB) 1383, as enacted in 2017, establishes statewide targets to reduce the statewide disposal of organic waste by 50 percent by 2020 and 75 percent by 2025; and requires that not less than 20 percent of edible food that is currently to be disposed of be recovered for human consumption by 2025. As part of SB 1383, Chapter 12 of Title 14, Division 7 of the California Code of Regulations (CCR), and amended portions of regulations of Title 14 CCR and Title 27 CCR were created, also referred to as Short-Lived Climate Pollutants: Organic Waste Reductions regulations. The City of Fresno adopted Bill B-3, Ordinance 2022-003 to amend Chapter 6, Article 2 of FMC at its March 10, 2022, meeting. Subsequently, the City of Fresno adopted Bill B-11, Ordinance 2022-011 to amend Section 6-233 of FMC relating to the requirements for commercial edible food generators at its May 26, 2022, meeting.

5. As required by FMC section 6-206(a) residential and commercial establishments are required to maintain solid waste, recyclables, and organics collection service through an authorized provider. The City has the right to review the number and size of containers and require applicants to adjust the service level (frequency of service).

6. This Project will require 1 (one) 3-cell trash enclosure designed to accommodate separate facilities containing 2 (two) – 4-cu. yd. bins, one for trash and one for recycling collection, and 1 (one) 2-cu.yd. bin for green and/or organic/food waste (to be placed in a cell designated for grease collection storage) to be constructed to current Public Works Standard Drawings (Solid Waste Standards) **P-33A through C, P-34, and P-35; and P-93, and/or P-94, and/or P-95** to be serviced once a week.

   Note 1: The Site Plan uploaded to Accela on July 25, 2025, currently depicts a new 2-cell trash enclosure to service the Project. The applicant shall revise the Site Plan to show 1 (one) new 3-cell trash enclosure and note/document this in any subsequent submittals (permit, etc.) to the City's various departments.

7. Service Route Permits and Location Permits are required for all private trash company services within the City of Fresno per FMC 9-408. All private company trash service arrangements must be pre-approved through Solid Waste Management Division.

8. Trash enclosures shall be at least 40 feet way from entrances and exits to prevent trucks from sticking out in the roadway while waiting to access trash enclosure, in accordance with Public Works Standard Drawing **P-34**.

9. Ingress and egress of the location shall have an unobstructed overhead clearance of 16 feet and shall not be less than 18 feet wide, in accordance with Public Works Standard Drawing **P-34**.

10. The applicant will need to provide a 44-foot (centerline) turning radius at all corners and a T-turnaround (or hammerhead) area where the solid waste vehicle is to turn around, in accordance with Public Works Standard Drawing **P-34**.

11. The safe back up limit for a solid waste vehicle shall not exceed 45 feet, in accordance with Public Works Standard Drawing **P-34**.

12. On solid waste service collection days provide access to the gates by 5:30 AM. Alternatively, provide a lock box with key, remote control access, or access code (same as for the Fire Department).

13. Americans with Disability Act (ADA) requirement for office/commercial complexes (developments):

    The applicant shall install (construct) a trash enclosure(s) for the Project that complies with the City's ADA requirements as defined in the City's Standard Drawings, Details and Specifications. The certificate of occupancy for the Project shall be withheld until the applicant installs (constructs) the trash enclosure(s) in accordance with the City's ADA requirements.

Other Information

As-built drawings for utilities in the right-of-way may be requested by submitting a filled-out Information Request Intake Form to dpu.plan@fresno.gov.

Attachments: DPU1 Redlines dated August 14, 2025
Information Request Intake Form
Public Works Standard Drawings P-33A through C, P-34, P-35, P-93 through P-95

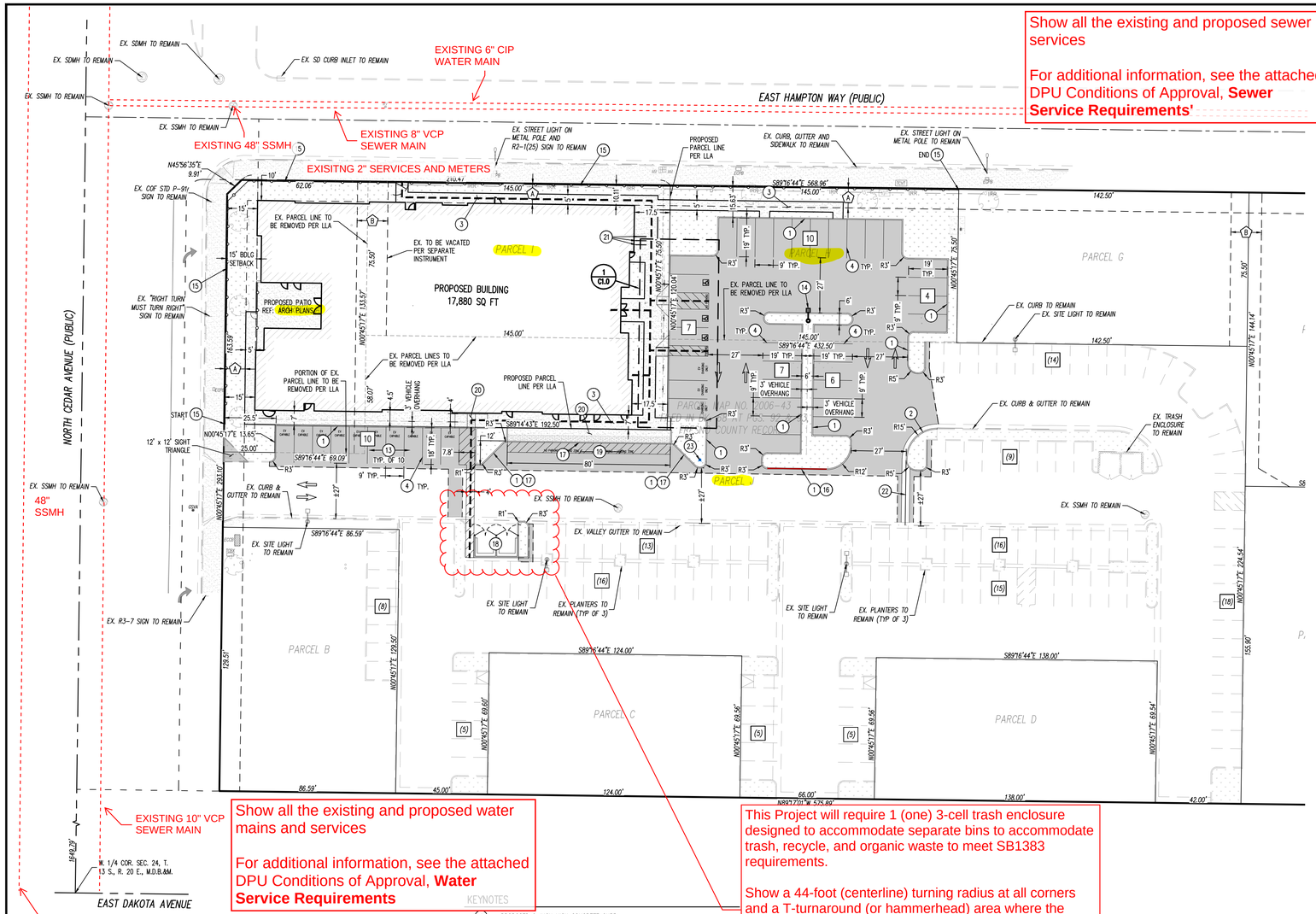

Show all the existing and proposed sewer services

For additional information, see the attached DPU Conditions of Approval, **Sewer Service Requirements'**

Show all the existing and proposed water mains and services

For additional information, see the attached DPU Conditions of Approval, **Water Service Requirements**

This Project will require 1 (one) 3-cell trash enclosure designed to accommodate separate bins to accommodate trash, recycle, and organic waste to meet SB1383 requirements.

Show a 44-foot (centerline) turning radius at all corners and a T-turnaround (or hammerhead) area where the solid waste vehicle is to turn around, in accordance with Public Works Standard Drawings P-33A through C, P-34, and P-35; and P-93, and/or P-94, and/or P-95

For details see the attached DPU Conditions of Approval, **Solid Waste Service Requirements**

KEYNOTES

1. PROPOSED 6-INCH HIGH CONCRETE CURB.
2. PROPOSED 6-INCH HIGH CONCRETE CURB WITH 24-INCH WIDE GUTTER.
3. PROPOSED CONCRETE WALK (WIDTH PER PLAN).
4. PAINT 4-INCH WHITE PARKING STALL STRIPE
5. ACCESS AISLE PAINTED WITH 4-INCH WIDE BLUE STRIPE BORDER AND 4-INCH WIDE WHITE DIAGONAL LINES SPACED AT MAX 3-FOOT O.C.
6. INSTALL ACCESSIBLE STALL SIGNAGE. ACCESSIBLE PARKING ONLY/MINIMUM FINE COMBINATION SIGN (R99C(CA)) OR SIMILAR. VAN ACCESSIBLE STALL SHALL ALSO INCLUDE "VAN ACCESSIBLE" PLAQUE (R7-8B) BENEATH PARKING SIGN. BOTTOM OF LOWEST SIGN SHALL BE INSTALLED A MINIMUM OF 60" ABOVE FINISHED GRADE.
7. PAINT INTERNATIONAL SYMBOL OF ACCESSIBILITY PAVEMENT MARKING PER 2022 CBC 11B-502.6.4.1
8. PAINT "NO PARKING" IN MINIMUM 12-INCH HIGH WHITE LETTERS
9. PROPOSED VAN ACCESSIBLE PARKING STALL
10. PROPOSED ELECTRIC VEHICLE CHARGING STATION (EVCS)
11. INSTALL EV CHARGING SIGNAGE. NO PARKING EXCEPT EV CHARGING (R113(CA)) OR SIMILAR. BOTTOM OF LOWEST SIGN SHALL BE INSTALLED A MINIMUM OF 60" ABOVE FINISHED GRADE.
12. PAINT "EV CHARGING ONLY" IN MINIMUM 12-INCH HIGH WHITE LETTERS.
13. PROPOSED EV CAPABLE PARKING STALL
14. PROPOSED SITE LIGHT. REF: ELECTRICAL PLANS.
15. PROPOSED 6-FOOT TALL DECORATIVE IRON FENCE. REF: ARCHITECTURAL PLANS.
16. PAINT CURB RED WITH MINIMUM 4-INCH HIGH WHITE LETTERING READING "FIRE LANE - NO PARKING" AT MAXIMUM 50-FOOT INTERVALS
17. PAINT CURB YELLOW
18. PROPOSED 2-CELL TRASH ENCLOSURE PER CITY OF FRESNO PW STDS. P-33A, P-34 AND P-35
19. PROPOSED 80-FOOT BY 12-FOOT PASSENGER DROP OFF AND LOADING ZONE
20. PROPOSED PEDESTRIAN RAMP
21. PROPOSED BIKE RACKS. REF: ARCHITECTURAL PLANS
22. PROPOSED 48-INCH WIDE VALLEY GUTTER
23. PROPOSED LOCATION OF RELOCATED FIRE HYDRANT ASSEMBLY

PROJECT INFORMATION TABLE

PROJECT NAME	GRANITE PARK P.A.C.E. FACILITY
SITE ADDRESS	SEC CEDAR AVENUE & HAMPTON WAY
ASSESSOR PARCEL NUMBERS	438-220-01, 08, 09, 10 (PORTION)

ZONING & LAND USE

	EXISTING	PROPOSED
ZONING	O/cz (OFFICE/CONDITIONS OF ZONING)	O (OFFICE)
LAND USE	VACANT PARCEL, PARTIALLY IMPROVED PARKING LOT	ADULT DAYCARE FACILITY
SITE AREA	26,411 S.F. (0.61 GROSS ACRES)	26,411 S.F. (0.61 NET ACRES)

SITE COVERAGE

	AREA	PERCENT COVERAGE
EXISTING BUILDING AREA	±0 S.F. (0.00 ACRES)	0%
PROPOSED BUILDING AREA	±17,896 S.F. (0.41 ACRES)	68%
LANDSCAPE AREA	±4,164 S.F. (0.10 ACRES)	16%
CONCRETE PAVEMENT	±3,588 S.F. (0.08 ACRES)	14%
ASPHALT PAVEMENT	0 S.F. (0.00 ACRES)	0%

PARKING SUMMARY TABLE

TYPE	METHOD	REQUIRED	PROVIDED
VEHICLE	ADULT DAY CARE: 1 PER EMPLOYEE + 2 LOADING SPACES	50 + 2 LOADING	58 + 2 LOADING
ACCESSIBLE	TABLE 11B-208.2 & SEC. 11B-208.2.4, 2022 CBC	3 (1 VAN ACCESSIBLE)	3 (1 VAN ACCESSIBLE)
SHORT TERM BICYCLE	SEC. 5.106.4.1.1 2022 CALGREEN STANDARDS	2	3
LONG TERM BICYCLE	SEC. 5.106.4.1.2 2022 CALGREEN STANDARDS	2	2 (INTERIOR)
EV CAPABLE SPACES	TABLE 5.106.5.3.1 2022 CALGREEN STANDARDS	13	13
EVCS	TABLE 5.106.5.3.3 2022 CALGREEN STANDARDS	3	3

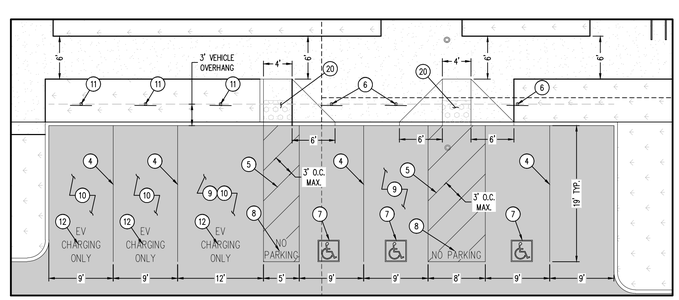

1 FRONT PARKING DETAIL
SCALE: 1" = 10'

N
SCALE: 1"=30'

LEGEND

- EXISTING PROPERTY LINE
- EXISTING CENTER LINE
- EXISTING SECTION LINE
- ADA PATH OF TRAVEL
- PROPOSED RED CURB
- PROPOSED LANDSCAPING
- PROPOSED CONCRETE PAVEMENT
- PROPOSED CONCRETE SIDEWALK
- PROPOSED ASPHALT CONCRETE
- # PROPOSED PARKING COUNT
- (#) EXISTING PARKING COUNT
- EXISTING SEWER MAIN
- EXISTING WATER MAIN

PUBLIC WORKS GENERAL NOTES

1. ANY SURVEY MONUMENTS WITHIN THE AREA OF CONSTRUCTION SHALL BE PRESERVED OR RESET BY A PERSON LICENSED TO PRACTICE LAND SURVEYING IN THE STATE OF CALIFORNIA.
2. REPAIR ALL DAMAGED AND/OR OFF-GRADE CONCRETE STREET IMPROVEMENTS AS DETERMINED BY THE CONSTRUCTION MANAGEMENT ENGINEER, PRIOR TO OCCUPANCY.
3. TWO WORKING DAYS BEFORE COMMENCING EXCAVATION OPERATIONS WITHIN THE STREET RIGHT-OF WAY AND/OR UTILITY EASEMENTS, ALL EXISTING UNDER-GROUND FACILITIES SHALL HAVE BEEN LOCATED BY UNDERGROUND SERVICES.
4. THE PERFORMANCE OF ANY WORK WITHIN THE PUBLIC STREET RIGHT-OF-WAY REQUIRES A STREET WORK PERMIT PRIOR TO COMMENCEMENT OF WORK. ALL REQUIRED STREET IMPROVEMENTS MUST BE COMPLETED AND ACCEPTED BY THE CITY PRIOR TO OCCUPANCY.
5. CONTACT THE PUBLIC WORKS DEPARTMENT, TRAFFIC ENGINEERING AT (559) 621-8800, 10 WORKING DAYS PRIOR TO ANY OFFSITE CONCRETE CONSTRUCTION.
6. FOR STANDARD DRAWINGS VISIT https://www.fresno.gov/wp-content/uploads/2025/01/City-of-Fresno-Standards-Vol-1-Std.-Drawings_JAN-2025.pdf
7. FOR TRAFFIC PLANNING'S WEBSITE WITH USEFUL LINKS, ADDITIONAL NOTES, SAMPLE OF LEGEND, PARKING MANUAL AND TRAFFIC STUDY CHECKLIST VISIT https://www.fresno.gov/publicworks/traffic-engineering/#tab-2
8. TRAFFIC PLANNING CHECKLIST LINK: http://www.fresno.gov/publicworks/wp-content/uploads/sites/17/2019/04/Traffic-Planning-Checklist-04-19.pdf19.pd
9. FOR TRAFFIC STUDY QUESTIONS PLEASE CONTACT JILL GORMLEY AT (559) 621-8792 OR VIA EMAIL AT JILL.GORMLEY@FRESNO.GOV.

GENERAL NOTES

1. APPROVAL OF THIS SPECIAL PERMIT MAY BECOME NULL AND VOID IN THE EVENT THAT DEVELOPMENT IS NOT COMPLETED IN ACCORDANCE WITH ALL THE CONDITIONS AND REQUIREMENTS IMPOSED ON THIS SPECIAL PERMIT, THE CITYWIDE DEVELOPMENT CODE, AND ALL PUBLIC WORKS STANDARDS AND SPECIFICATIONS. THIS SPECIAL PERMIT IS GRANTED, AND THE CONDITIONS IMPOSED, BASED UPON THE OPERATIONAL STATEMENT PROVIDED BY THE APPLICANT. THE OPERATIONAL STATEMENT IS MATERIAL TO THE ISSUANCE OF THIS SPECIAL PERMIT. UNLESS THE CONDITIONS OF APPROVAL SPECIFICALLY REQUIRE OPERATION INCONSISTENT WITH THE OPERATIONAL STATEMENT, A NEW OR REVISED SPECIAL PERMIT IS REQUIRED IF THE OPERATION OF THIS ESTABLISHMENT CHANGES OR BECOMES INCONSISTENT WITH THE OPERATIONAL STATEMENT. FAILURE TO OPERATE IN ACCORDANCE WITH THE CONDITIONS AND REQUIREMENTS IMPOSED MAY RESULT IN REVOCATION OF THE SPECIAL PERMIT OR ANY OTHER ENFORCEMENT REMEDY AVAILABLE UNDER THE LAW. THE PLANNING AND DEVELOPMENT DEPARTMENT SHALL NOT ASSUME RESPONSIBILITY FOR ANY DELETIONS OR OMISSIONS RESULTING FROM THE SPECIAL PERMIT REVIEW PROCESS OR FOR ADDITIONS OR ALTERATIONS TO CONSTRUCTION PLANS NOT SPECIFICALLY SUBMITTED AND REVIEWED AND APPROVED PURSUANT TO THIS SPECIAL PERMIT OR SUBSEQUENT AMENDMENTS OR REVISIONS.
2. APPROVAL OF THIS SPECIAL PERMIT SHALL BE CONSIDERED NULL AND VOID IN THE EVENT OF FAILURE BY THE APPLICANT AND/OR THE AUTHORIZED REPRESENTATIVE, ARCHITECT, ENGINEER, OR DESIGNER TO DISCLOSE AND DELINEATE ALL FACTS AND INFORMATION RELATING TO THE SUBJECT PROPERTY AND THE PROPOSED DEVELOPMENT INCLUDING, BUT NOT LIMITED TO, THE FOLLOWING:
   a) ALL EXISTING AND PROPOSED IMPROVEMENTS INCLUDING BUT NOT LIMITED TO BUILDINGS AND STRUCTURES, SIGNS AND THEIR USES, TREES, WALLS, DRIVEWAYS, OUTDOOR STORAGE, AND OPEN LAND USE AREAS ON THE SUBJECT PROPERTY AND ALL OF THE PRECEDING WHICH ARE LOCATED ON ADJOINING PROPERTY AND MAY ENCROACH ON THE SUBJECT PROPERTY.
   b) ALL PUBLIC AND PRIVATE EASEMENTS, RIGHTS-OF-WAY AND ANY ACTUAL OR POTENTIAL PRESCRIPTIVE EASEMENTS OR USES OF THE SUBJECT PROPERTY; AND,
   c) EXISTING AND PROPOSED GRADE DIFFERENTIALS BETWEEN THE SUBJECT PROPERTY AND ADJOINING PROPERTY ZONED OR PLANNED FOR RESIDENTIAL USE.
3. NO LAND SHALL BE USED, AND NO STRUCTURE SHALL BE CONSTRUCTED, OCCUPIED, ENLARGED, ALTERED, DEMOLISHED, OR MOVED IN ANY ZONING DISTRICT, EXCEPT IN ACCORDANCE WITH THE PROVISIONS OF THIS CODE. SPECIFIC USES OF LAND, BUILDINGS, AND STRUCTURES LISTED AS PROHIBITED IN ANY ZONING DISTRICT ARE HEREBY DECLARED TO BE DETRIMENTAL TO THE PUBLIC HEALTH, SAFETY, AND WELFARE.
4. DEVELOPMENT SHALL TAKE PLACE IN ACCORDANCE WITH THE STANDARDS, SPECIFICATIONS, AND STANDARD DRAWINGS OF THE CITY OF FRESNO PUBLIC WORKS DEPARTMENT;
5. DEVELOPMENT SHALL TAKE PLACE IN ACCORDANCE WITH ALL CITY, COUNTY, STATE AND FEDERAL LAWS AND REGULATIONS.
6. OWNERS AND PERSONS HAVING OWNERSHIP INTEREST IN BUSINESSES OPERATING IN THE CITY OF FRESNO ARE REQUIRED BY THE FRESNO MUNICIPAL CODE TO OBTAIN A BUSINESS TAX CERTIFICATE. CONTACT THE CITY OF FRESNO FINANCE DEPARTMENT'S BUSINESS TAX DIVISION AT (559) 621-6880 FOR MORE INFORMATION. INFORMATION AND AN APPLICATION FORM ARE AVAILABLE ON THE CITY'S WEBSITE.
7. ALL PROPOSED BUILDING(S) OR STRUCTURE(S) CONSTRUCTED ON THE PROPERTY MUST COMPLY WITH THE PREVAILING CALIFORNIA BUILDING CODE STANDARDS.
8. ANY BUILDING MODIFICATIONS AND/OR ADDITIONS NOT INCLUDED WITH THIS APPLICATION ARE NOT APPROVED WITH THIS SPECIAL PERMIT AND WOULD BE SUBJECT TO A NEW SPECIAL PERMIT.
9. A PERMIT GRANTED UNDER THE FRESNO MUNICIPAL CODE SHALL AUTOMATICALLY EXPIRE IF IT IS NOT EXERCISED OR EXTENDED WITHIN THREE YEARS OF ITS ISSUANCE. REFER TO SECTION 15-5013, EXPIRATION OF PLANNING ENTITLEMENTS, FOR MORE INFORMATION ABOUT THE EXERCISE OF RIGHTS.
10. ALL ACCESSIBLE STALLS SHALL BE MARKED WITH THE INTERNATIONAL SYMBOL OF SPACES AND A WARNING THAT VEHICLES IN VIOLATION OF SECTION 10-1017 OF THE FRESNO MUNICIPAL CODE SHALL BE TOWED AWAY. THE INTERNATIONAL SYMBOL AND TOW-AWAY WARNING SHALL BE POSTED CONSPICUOUSLY ON SEVEN-FOOT POLES.
11. APPLICANTS ARE ENCOURAGED TO PROVIDE SHARED VEHICLE AND PEDESTRIAN ACCESS BETWEEN ADJACENT PROPERTIES FOR CONVENIENCE, SAFETY, AND EFFICIENT CIRCULATION. A JOINT ACCESS COVENANT SHALL BE REQUIRED.
12. SIGNS, OTHER THAN DIRECTIONAL SIGNS, IF APPLICABLE, ARE NOT APPROVED FOR INSTALLATION AS PART OF THIS SPECIAL PERMIT.
13. IF ARCHAEOLOGICAL AND/OR ANIMAL FOSSIL MATERIAL IS ENCOUNTERED DURING PROJECT SURVEYING, GRADING, EXCAVATING, OR CONSTRUCTION, WORK SHALL STOP IMMEDIATELY.
14. IF THERE ARE SUSPECTED HUMAN REMAINS, THE FRESNO COUNTY CORONER SHALL BE IMMEDIATELY CONTACTED. IF THE REMAINS OR OTHER ARCHAEOLOGICAL MATERIAL IS POSSIBLY NATIVE AMERICAN IN ORIGIN, THE NATIVE AMERICAN HERITAGE COMMISSION (PHONE: (916) 653-4082) SHALL BE IMMEDIATELY CONTACTED, AND THE CALIFORNIA ARCHAEOLOGICAL INVENTORY/SOUTHERN SAN JOAQUIN VALLEY INFORMATION CENTER (PHONE: (805) 644-2289) SHALL BE CONTACTED TO OBTAIN A REFERRAL LIST OF RECOGNIZED ARCHAEOLOGISTS. AN ARCHEOLOGICAL ASSESSMENT SHALL BE CONDUCTED FOR THE PROJECT, THE SITE SHALL BE FORMALLY RECORDED, AND RECOMMENDATIONS MADE TO THE CITY AS TO ANY FURTHER SITE INVESTIGATION OR SITE AVOIDANCE/PRESERVATION.
15. IF ANIMAL FOSSILS ARE UNCOVERED, THE MUSEUM OF PALEONTOLOGY, U.C. BERKELEY SHALL BE CONTACTED TO OBTAIN A REFERRAL LIST OF RECOGNIZED PALEONTOLOGISTS. AN ASSESSMENT SHALL BE CONDUCTED BY A PALEONTOLOGIST AND, IF THE PALEONTOLOGIST DETERMINES THE MATERIAL TO BE SIGNIFICANT, IT SHALL BE PRESERVED.

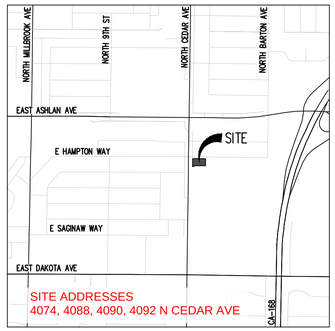

VICINITY MAP

NOT TO SCALE

N

OWNER/APPLICANT

STOCK FIVE DEVELOPMENT, INC
2972 LARKIN AVENUE
CLOVIS, CA 93612
ATTN: GUY STOCKBRIDGE
TEL: (559) 292-2900

PREPARED BY

GALLOWAY & COMPANY, INC
575 E. LOCUST AVENUE, SUITE 103
FRESNO, CA 93720
ATTN: TERRA MORTENSEN, PE
TEL: (559) 721-5030

LEGAL DESCRIPTION

PARCEL A
THE LAND DESCRIBED HEREIN IS SITUATED IN THE STATE OF CALIFORNIA, COUNTY OF FRESNO, CITY OF FRESNO, DESCRIBED AS FOLLOWS:

PARCEL A AS SHOWN ON PARCEL MAP NO. 2006-43 FILED IN THE OFFICE OF THE FRESNO COUNTY RECORDER ON AUGUST 8, 2008, IN BOO 68, OF PARCEL MAPS, AT PAGES 92 AND 93, RECORDS OF SAID COUNTY.

APN: 438-220-01

PARCEL H
THE LAND DESCRIBED HEREIN IS SITUATED IN THE STATE OF CALIFORNIA, COUNTY OF FRESNO, CITY OF FRESNO, DESCRIBED AS FOLLOWS:

PARCEL H AS SHOWN ON PARCEL MAP NO. 2006-43 FILED IN THE OFFICE OF THE FRESNO COUNTY RECORDER ON AUGUST 8, 2008, IN BOO 68, OF PARCEL MAPS, AT PAGES 92 AND 93, RECORDS OF SAID COUNTY.

APN: 438-220-08

PARCEL I
THE LAND DESCRIBED HEREIN IS SITUATED IN THE STATE OF CALIFORNIA, COUNTY OF FRESNO, CITY OF FRESNO, DESCRIBED AS FOLLOWS:

PARCEL I AS SHOWN ON PARCEL MAP NO. 2006-43 FILED IN THE OFFICE OF THE FRESNO COUNTY RECORDER ON AUGUST 8, 2008, IN BOO 68, OF PARCEL MAPS, AT PAGES 92 AND 93, RECORDS OF SAID COUNTY.

APN: 438-220-09

PARCEL J
THE LAND DESCRIBED HEREIN IS SITUATED IN THE STATE OF CALIFORNIA, COUNTY OF FRESNO, CITY OF FRESNO, DESCRIBED AS FOLLOWS:

PARCEL J AS SHOWN ON PARCEL MAP NO. 2006-43 FILED IN THE OFFICE OF THE FRESNO COUNTY RECORDER ON AUGUST 8, 2008, IN BOO 68, OF PARCEL MAPS, AT PAGES 92 AND 93, RECORDS OF SAID COUNTY.

APN: 438-220-10

SETBACKS

BUILDING	FRONT: 15', INTERIOR SIDE: 10' (PER FIRE CODE), ALLEY: 0'
PARKING	15' FROM BACK OF SW OR CURB, 20' FROM R/W ON CEDAR
OPEN SPACE	2.0 FAR

EASEMENT SCHEDULE

(A) EXISTING 10' PUBLIC UTILITY EASEMENT PER PM 2006-43, RECORDED ON AUGUST 8, 2008 IN BK. 68, PGS. 92 AND 93, OF PARCEL MAPS.

(B) EXISTING PRIVATE WATER MAIN EASEMENT OFFERED FOR DEDICATION PER DOC. NO. 2008-0071395, O.R.F.C.

APPL. NO. P25-01774 EXHIBIT A DATE 07/25/2025
PLANNING REVIEW BY _____ DATE _____
TRAFFIC ENG. _____ DATE _____
APPROVED BY _____ DATE _____
CITY OF FRESNO DARM DEPT

BASIS OF BEARING

THE WEST LINE OF THE NORTHWEST QUARTER OF SECTION 24, T. 13 S., R. 20 E., M.D.B.& M., PER PARCEL MAP NO. 2006-43, FILED IN BOOK 68 OF PARCEL MAPS, AT PAGES 92-93, F.C.R., TAKEN AS NORTH 0°45'17" EAST.

BENCHMARK

ELEVATIONS HAVE BEEN COMPUTED FROM CITY OF FRESNO TBM 365, DESCRIBED AS A CHISELED SQUARE ON CURB, ON THE WEST SIDE OF CEDAR AVENUE, 130' SOUTH OF SOUTH HAMPTON WAY.

ELEVATION = 324.679'

CAUTION - NOTICE TO CONTRACTOR

1. ALL UTILITY LOCATIONS SHOWN ARE BASED ON MAPS PROVIDED BY THE APPROPRIATE UTILITY COMPANY AND FIELD SURFACE EVIDENCE AT THE TIME OF SURVEY AND IS TO BE CONSIDERED AN APPROXIMATE LOCATION ONLY. IT IS THE CONTRACTOR'S RESPONSIBILITY TO FIELD VERIFY THE LOCATION OF ALL UTILITIES, PUBLIC OR PRIVATE, WHETHER SHOWN ON THE PLANS OR NOT, PRIOR TO CONSTRUCTION. REPORT ANY DISCREPANCIESTO THE ENGINEER PRIOR TO CONSTRUCTION.
2. WHERE A PROPOSED UTILITY CROSSES AN EXISTING UTILITY, IT IS THE CONTRACTOR'S RESPONSIBILITY TO FIELD VERIFY THE HORIZONTAL AND VERTICAL LOCATION OF SUCH EXISTING UTILITY, EITHER THROUGH POTHOLING OR ALTERNATIVE METHOD. REPORT INFORMATION TO THE ENGINEER PRIOR TO CONSTRUCTION.

811 Know what's **below.** **Call** before you dig.

REZONE APP. NO. P25-XXXXX
CUP NO. P25-XXXXX

DPU1

08/14/2025
CCB/OS

REGISTERED PROFESSIONAL ENGINEER TERRA J. MORTENSEN 07/24/2025 NO. 75614 CIVIL STATE OF CALIFORNIA

COPYRIGHT
THESE PLANS ARE AN INSTRUMENT OF SERVICE AND ARE THE PROPERTY OF GALLOWAY, AND MAY NOT BE DUPLICATED, DISCLOSED, OR REPRODUCED WITHOUT THE WRITTEN CONSENT OF GALLOWAY. COPYRIGHTS AND INFRINGEMENTS WILL BE ENFORCED AND PROSECUTED.

GRANITE PARK PACE FACILITY
STOCK FIVE DEVELOPMENT, INC

SEC CEDAR AVENUE & HAMPTON WAY
FRESNO, CA 93726

#	Date	Issue / Description	Init.

Project No:	SBD00000010.20
Drawn By:	BMC
Checked By:	JR
Date:	07/18/25

SITE PLAN

C1.0

Show all proposed and existing water services and sizes related to landscape.

For details, see the attached DPU Conditions of Approval, **Landscape Requirements**

DPU1

08/14/2025
CCB/OS

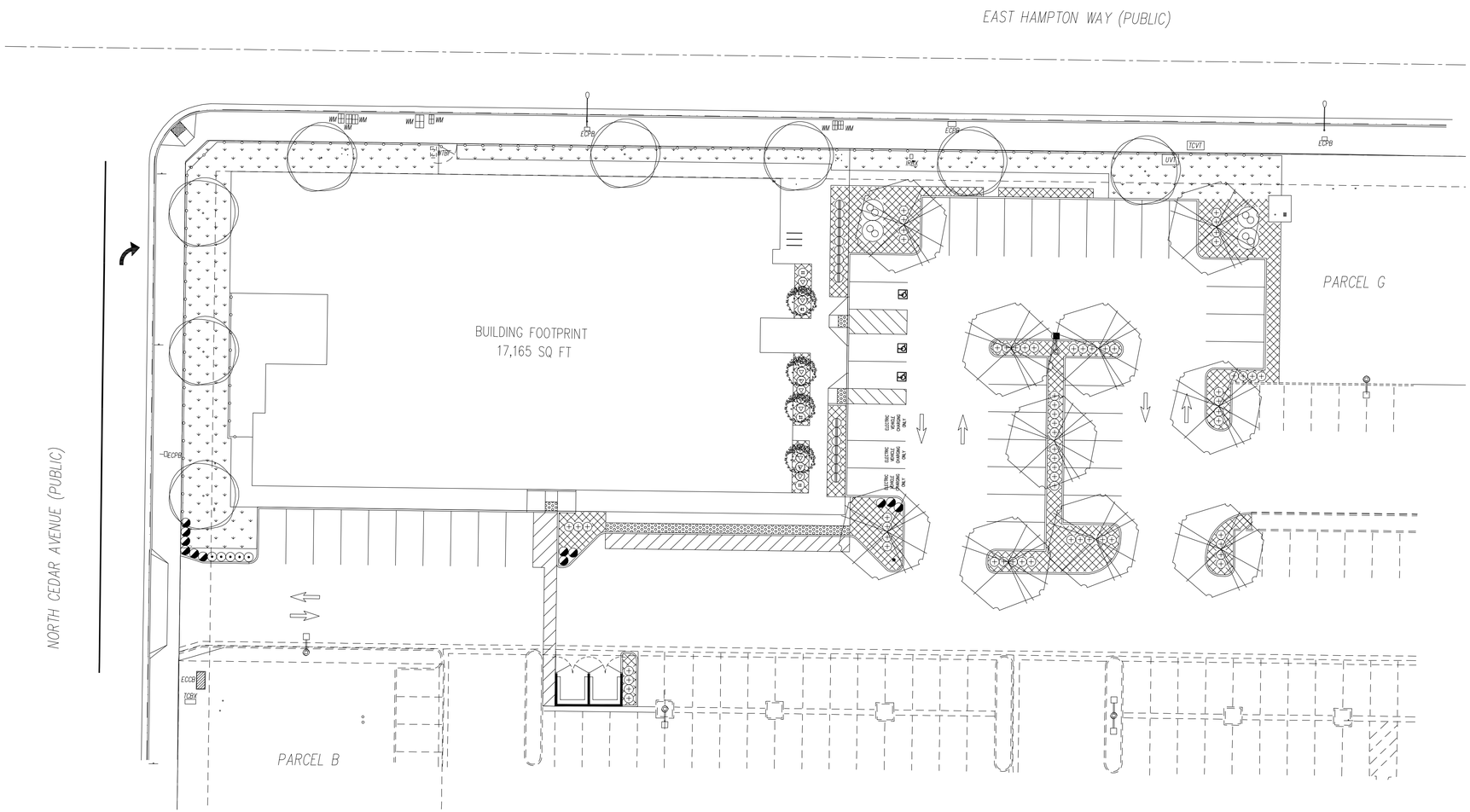

PLANTING PLAN

SCALE: 1"=20'-0"

PLANTING LEGEND

TREES

SYMBOL	SIZE	BOTANICAL NAME / COMMON NAME	COMMENTS	QUANT.
	15 GAL	ACER PALMATUM / JAPANESE MAPLE	STANDARD	4
	15 GAL	PISTACHIA CHINENSIS / CHINESE PISTACHE	STANDARD	10
	15 GAL	NYSSA SYLVATICA / TUPELO	STANDARD	8

SHRUBS & GROUNDCOVERS

SYMBOL	SIZE	BOTANICAL NAME / COMMON NAME	COMMENTS
	5 GAL	LAGERSTROEMIA INDICA / CRAPE MYRTLE SHRUB	MULTI-TRUNK
	5 GAL	PHOTENIA FRASERI / PHOTENIA	STANDARD
	5 GAL	LIGUSTRUM TEXANUM / WAXLEAF PRIVET	STANDARD
	5 GAL	RHAPHIOLEPIS INDICA 'BALLERINA' / INDIA HAWTHORN	STANDARD
	5 GAL	ESCALLONIA FRADESI / ESCALLONIA	STANDARD
	5 GAL	VIBURNUM TINUS 'SPRING BOUQUET' / LAURUSTINUS	STANDARD
	5 GAL	LOROPETALUM / PLUM DELIGHT	STANDARD
	FLATS	LONICERA / HONEYSUCKLE	SPACE @ 12" O.C.
	SOD	FESCUE	

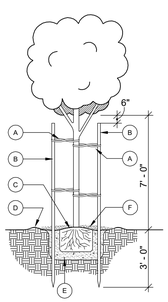

KEY NOTES

- (A) TREE TIES TO BE APPROVED RUBBER OR PLASTIC STRAPS NAILED TO STAKES.
- (B) TREATED 2"x10' LODGE POLE STAKE TO BE SET VERTICAL.
- (C) TOP OF ROOT BALL IS TO BE SET SLIGHTLY ABOVE FINISH GRADE.
- (D) CONSTRUCT WATER BASIN TO THE DIAMETER NOTED BELOW WITH 3" BERM AROUND PERIMETER.

BERM DIAMETER	SIZE OF PLANT
30"	15 GALLON

- (E) AGRIFORM PLANT FERTILIZER TABLETS.
- (F) MULCH AS TOP DRESSING ALL NON-TURF LANDSCAPE AREAS WITH SHREDDED BARK. INSTALL TO A COMPACTED DEPTH OF THREE INCHES (3"). DO NOT ENGULF THE STEMS OR TRUNKS OF TREES.

TREE PLANTING

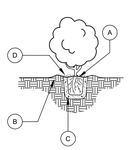

KEY NOTES

- (A) TOP OF ROOT BALL IS TO BE SET SLIGHTLY ABOVE FINISH GRADE.
- (B) CONSTRUCT WATER BASIN TO THE DIAMETER NOTED BELOW WITH 3" BERM AROUND PERIMETER.

BERM DIAMETER	SIZE OF PLANT
16"	5 GALLON PLANT

- (C) AGRIFORM PLANT FERTILIZER TABLETS.
- (D) MULCH AS TOP DRESSING ALL NON-TURF LANDSCAPE AREAS WITH SHREDDED BARK. INSTALL TO A COMPACTED DEPTH OF THREE INCHES (3"). DO NOT ENGULF THE STEMS OR TRUNKS OF SHRUBS.

SHRUB PLANTING

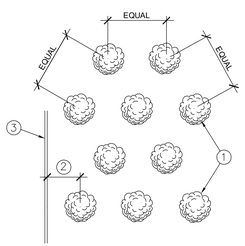

SPACING AS NOTED	PLANTS PER SQUARE FOOT
6" O.C.	4.61
8" O.C.	2.60
10" O.C.	1.66
12" O.C.	1.15
15" O.C.	0.74
18" O.C.	0.50
24" O.C.	0.28
30" O.C.	0.18
36" O.C.	0.12
48" O.C.	0.07
60" O.C.	0.04
72" O.C.	0.03

LEGEND

1. LOCATE PLANTS WITH EQUAL SPACING AS INDICATED ON PLAN (TRIANGULAR SPACING.)
2. 1/2 ON CENTER SPACING.
3. WALK, CURB, WALL, PAVEMENT, OR EDGE OF PLANTING BED.

GROUNDCOVER SPACING

NOTES:

1. TREES SHALL BE MAINTAINED IN GOOD HEALTH. HOWEVER, TREES MAY NOT BE TRIMMED OR PRUNED TO REDUCE THE NATURAL HEIGHT OR OVERALL CROWN OF THE TREE, EXCEPT AS NECESSARY FOR THE HEALTH OF THE TREE AND PUBLIC SAFETY; OR AS MAY OTHERWISE BE APPROVED BY THE DEVELOPMENT DEPARTMENT.
2. LANDSCAPING MUST BE IN PLACE BEFORE ISSUANCE OF THE CERTIFICATE OF OCCUPANCY.

PARKING LOT SHADING

TOTAL SQUARE FOOTAGE OF PAVED PARKING SURFACE:		15,704 S.F.
REQUIRED SQUARE FOOTAGE OF SHADED PARKING SURFACE (50%):		7,852 S.F.
TREE CANOPY AREA		EACH @ 962 S.F.
PISTACHE CHINENSIS	10	9,620 S.F.
TOTAL SQUARE FOOTAGE:		9,620 S.F.
PERCENTAGE OF PAVED PARKING SURFACE SHADED:		61%

MWELO COMPLIANCE STATEMENT

I, THE LANDSCAPE ARCHITECT OF RECORD, HAVE COMPLIED WITH THE CRITERIA OF THE ORDINANCE AND APPLIED THEM ACCORDINGLY FOR THE EFFICIENT USE OF WATER IN THE IRRIGATION & LANDSCAPE DESIGN PLAN.

DAVE BIGLER — 5/8/25 DATE

APPL. NO. P25-01774 EXHIBIT L-1 DATE 07/25/2025
PLANNING REVIEW BY _____ DATE _____
TRAFFIC ENG. _____ DATE _____
APPROVED BY _____ DATE _____

CITY OF FRESNO DARM DEPT

LICENSED LANDSCAPE ARCHITECT — DAVID B. BIGLER — RLA # 3887 — 31 JULY 26 RENEWAL DATE — STATE OF CALIFORNIA

David Bigler Associates
Landscape Architect #3887
1589 W. Shaw Avenue, Ste. 5
Fresno, California 93711
E Mail: davebigler @aol.com
Tel: (559) 276-9495
Fax: (559) 276-9497

GRANITE PARK PACE FACILITY
STOCK FIVE DEVELOPMENT, INC

SEC CEDAR AVENUE & HAMPTON WAY
FRESNO, CA 93726

#	Date	Issue / Description	Init.
-			
-			
-			
-			
-			
-			
-			
-			
-			
-			
-			
-			
-			
-			
-			
-			

Project No:	---
Drawn By:	SHD
Checked By:	GS
Date:	05/03/25

PLANTING PLAN

L1.00

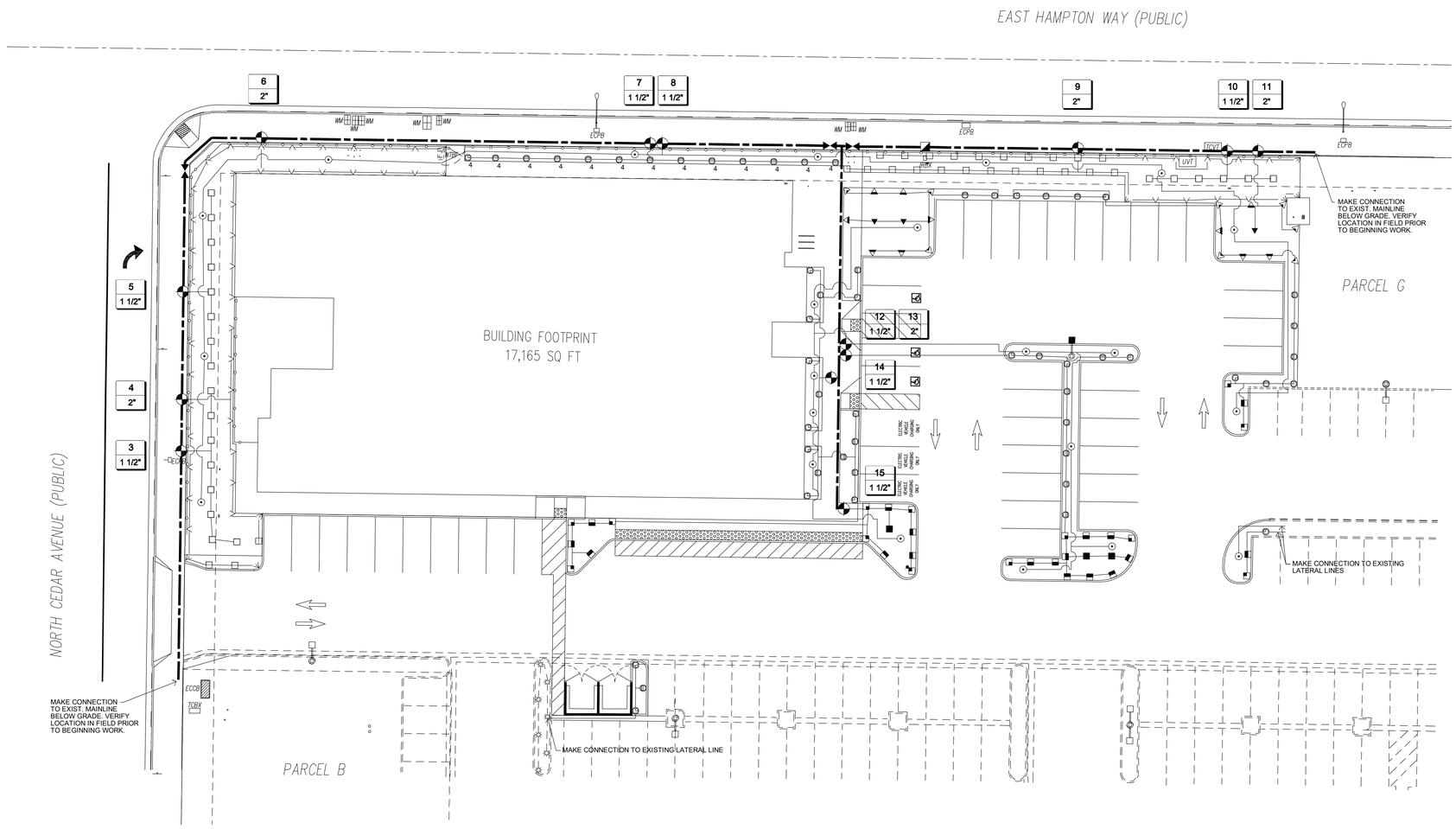

IRRIGATION PLAN

SCALE: 1"=20'-0"

Add Notes:

1.Service, meter, and backflow prevention device are to be of the same size (inside diameter of pipe).
2.1.5-inch and 2.0-inch meters to be installed per City of Fresno Public Works Standard Drawing W-1.
3.1.0-inch meters to be installed per City of Fresno Public Works Standard Drawing W-2.
4.Backflow prevention device to be installed per City of Fresno Public Works Standard Drawing W-11.
5.All Reduced Pressure Principle Backflow Prevention Assembly (i.e. RP devices) shall be tested and approved by a certified AWWA or ABPA tester within five days of installation. The property will not be given occupancy until all the RP devices are tested and documented with the City of Fresno Water Division. A list of Certified testers can be obtained by calling (559) 621-5335.
6.DPU reserves the right to require an applicant to increase or decrease the size of a water meter for the Project to ensure that it is properly sized to accommodate water demands and to allow for accurate volumetric flow measurements at low- and high-flow conditions.

APPL. NO. P25-01774 EXHIBIT L-2 DATE 07/25/2025

PLANNING REVIEW BY _____ DATE _____

TRAFFIC ENG. _____ DATE _____

APPROVED BY _____ DATE _____

CITY OF FRESNO DARM DEPT

MWELO COMPLIANCE STATEMENT

I, THE LANDSCAPE ARCHITECT OF RECORD, HAVE COMPLIED WITH THE CRITERIA OF THE ORDINANCE AND APPLIED THEM ACCORDINGLY FOR THE EFFICIENT USE OF WATER IN THE IRRIGATION & LANDSCAPE DESIGN PLAN.

DAVE BIGLER — 5/8/25 DATE

MWELO CALCULATIONS

Reference Evapotranspiration (ETo) 51.1

Hydrozone # / Planting Description[a]	Plant Factor (PF)	Irrigation Method[b]	Irrigation Efficiency (IE)[c]	ETAF (PF/IE)	Landscape Area (sq. ft.)	ETAF x Area	Estimated Total Water Use (ETWU)[e]
Regular Landscape Areas							
3 / Turf	0.8	Spray	0.75	1.067	399.00	425.60	13,484
4 / Turf	0.8	Spray	0.75	1.067	846.00	902.40	28,590
5 / Turf	0.8	Spray	0.75	1.067	283.00	301.87	9,564
6 / Turf	0.8	Spray	0.75	1.067	1,173.00	1251.20	39,641
7 / Turf	0.8	Spray	0.75	1.067	560.00	597.33	18,925
8 / Med. Trees	0.6	Bubbler	0.75	0.800	20.00	16.00	507
9 / Turf	0.8	Spray	0.75	1.067	1,195.00	1274.67	40,384
10 / Turf	0.8	Spray	0.75	1.067	255.00	272.00	8,618
11 / Med. Shrubs	0.6	Spray	0.75	0.800	871.00	696.80	22,076
12 / Med. Trees	0.6	Bubbler	0.75	0.800	22.00	17.60	558
13 / Med. Shrubs	0.6	Spray	0.75	0.800	908.00	726.40	23,014
14 / Med. Shrubs	0.6	Spray	0.75	0.800	1,397.00	1117.60	35,408
15 / Med. Shrubs	0.6	Spray	0.75	0.800	515.00	412.00	13,053
				Totals	8,444	8,011.47	**253,819**
Special Landscape Areas							
				Totals	8,444	8,011.47	
						ETWU Total	**253,819**
				Maximum Allowed Water Allowance (MAWA)[e]			**273,453**

LANDSCAPE IRRIGATION LEGEND

SYMBOL	DESCRIPTION
	RAINBIRD ROOT WATER SYSTEM. ONE PER TREE. RWS-BC 9
	HUNTER PROS-06 12' SHRUB POP-UP
	HUNTER PROS-06 10' SHRUB POP-UP
	HUNTER PROS-06 STRIP SHRUB POP-UP
	HUNTER PROS-04 12' LAWN POP-UP
	HUNTER PROS-04 10' LAWN POP-UP
4 4	HUNTER PROS-04 STRIP LAWN POP-UP
	EXISTING SPRAY HEAD & LATERAL
	HUNTER ICV AUTO VALVE. SIZE AS PER DESIGN.
19 / 1 1/2"	Station # / Valve Size
	FEBCO 825Y-A 2" BACKFLOW PREVENTER.
	NIBCO T-113 2 1/2" GATE VALVE.

LATERAL PIPE SIZING CHART	
PIPE SIZE	ALLOWABLE RANGE GALLONS PER MINUTE
3/4"	0 - 8 GPM
1"	9 - 14 GPM
1 1/2"	15 - 30 GPM
2"	31 - 46 GPM
2 1/2"	47+ GPM
3"	NOT USED

NOTES:
1. TREES SHALL BE MAINTAINED IN GOOD HEALTH. HOWEVER, TREES MAY NOT BE TRIMMED OR PRUNED TO REDUCE THE NATURAL HEIGHT OR OVERALL CROWN OF THE TREE, EXCEPT AS NECESSARY FOR THE HEALTH OF THE TREE AND PUBLIC SAFETY; OR AS MAY OTHERWISE BE APPROVED BY THE DEVELOPMENT DEPARTMENT.
2. LANDSCAPING MUST BE IN PLACE BEFORE ISSUANCE OF THE CERTIFICATE OF OCCUPANCY.

GENERAL NOTES:
MAINLINE PIPE TO BE 2 1/2" CL 315 PVC - 18" COVER.

LATERAL PIPE TO BE CL 200 PVC - 12" COVER.

AUTO VALVES TO BE INSTALLED IN RECTANGULAR VALVE BOX.

QCV & GATE VALVES TO BE INSTALLED IN ROUND VALVE BOX.

ALL SPRAY HEADS TO BE INSTALLED WITH SJ-512 HUNTER SWING JOINT ASSEMBLY.

INSTALL FEBCO BACKFLOW PREVENTER AS PER LOCAL CODE.

110 VOLT POWER TO CONTROLLER - BY OTHERS.

ALL PVC PIPE UNDER PAVING TO BE INSTALLED IN SCH. 40 PVC SLEEVES.

CONTROLLER LOCATION BY OWNER.

LICENSED LANDSCAPE ARCHITECT DAVID B. BIGLER STATE OF CALIFORNIA
RLA # 3887
31 JULY 26
RENEWAL DATE

David Bigler Associates
Landscape Architect #3887
1589 W. Shaw Avenue, Ste. 5
Fresno, California 93711
E Mail: davebigler @aol.com
Tel: (559) 276-9495
Fax: (559) 276-9497

GRANITE PARK PACE FACILITY
STOCK FIVE DEVELOPMENT, INC

SEC CEDAR AVENUE & HAMPTON WAY
FRESNO, CA 93726

#	Date	Issue / Description	Init.
-			
-			
-			
-			
-			
-			
-			
-			
-			
-			
-			
-			
-			
-			

Project No:	---
Drawn By:	SHD
Checked By:	GS
Date:	05/03/25

IRRIGATION PLAN

L2.00

ENCLOSURE SCALE / STANDARD

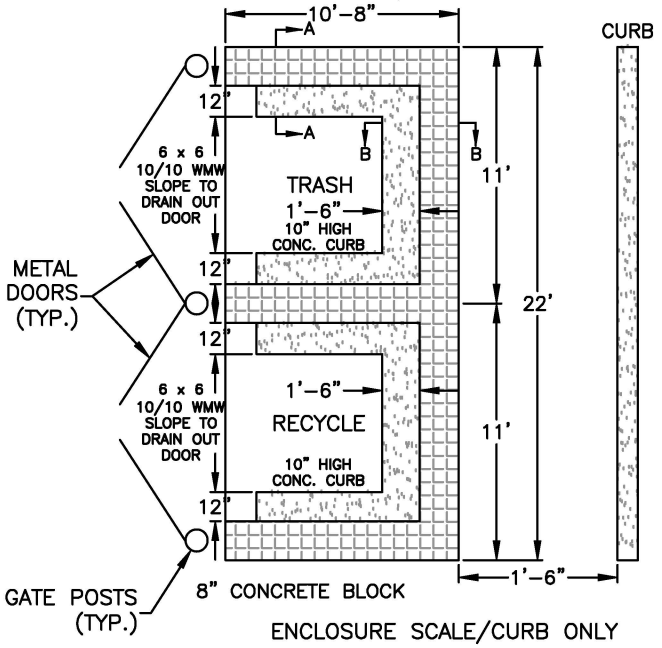

ENCLOSURE SCALE/CURB ONLY
ZONES–M1, M2, M3, & CM ONLY

ENCLOSURE SCALE / RESTAURANT

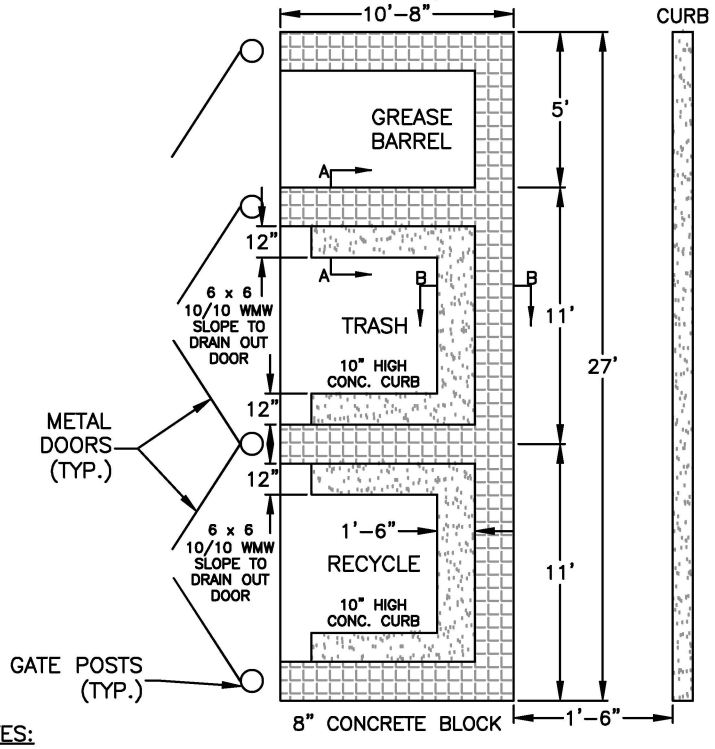

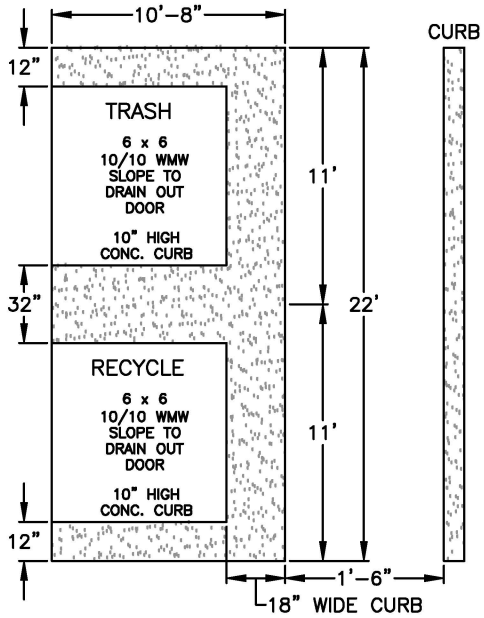

NOTES:

1. ALL CONSTRUCTION SHALL COMPLY WITH THE FRESNO MUNICIPAL CODE.
2. GROUT ALL CELLS.
3. ALL MASONRY UNITS SHALL COMPLY WITH THE LATEST ADOPTED CALIFORNIA BUILDING CODE AND U.B.C. STANDARD 24–4 GRADE N.
4. ALL MASONRY WALLS SHALL BE INSPECTED BY THE CITY OF FRESNO DEVELOPMENT DEPARTMENT.
5. DEPTH OF FOOTINGS ARE INTO NATURAL UNDISTURBED SOIL OR TESTED AND APPROVED COMPACTED FILL.
6. ALL MASONRY UNITS SHALL BE MINIMUM F'M=1500 PSI.
7. REINFORCING STEEL SHALL BE DEFORMED BAR, MIN. GRADE 40.
8. FOOTING CONCRETE SHALL BE A MINIMUM 2000 PSI AT 28 DAYS.
9. MORTAR SHALL BE TYPE–S (MINIMUM 1800 PSI AT 28 DAYS).
   –ONE (1) PART CEMENT, TYPE–1
   –ONE–HALF (1/2) PART LIME PUTTY OR HYDRATED LIME.
   –FOUR AND ONE–HALF (4 1/2) PARTS SAND (MAXIMUM).
10. GROUT SHALL BE A MINIMUM 2000 PSI AT 28 DAYS.
   –ONE (1) PART CEMENT.
   –THREE (3) PARTS SAND.
   –TWO (2) PARTS PEA GRAVEL.
11. FINISH PAD ELEVATION TO BE FLUSH WITH GRADE AT ACCESS PAVEMENT.
12. ANY GATE HINGES SHOULD BE LOCATED ON THE OUTSIDE.
13. METAL DOORS ARE REQUIRED ON ALL ENCLOSURES, CHAIN LINK IS NOT ACCEPTABLE.
14. 8" CONCRETE BLOCK TO BE USED FOR WALLS.
15. 2 CELLS ARE REQUIRED FOR COMMERCIAL/INDUSTRIAL BUILDINGS.
16. 3 CELLS ARE REQUIRED FOR RESTAURANTS.

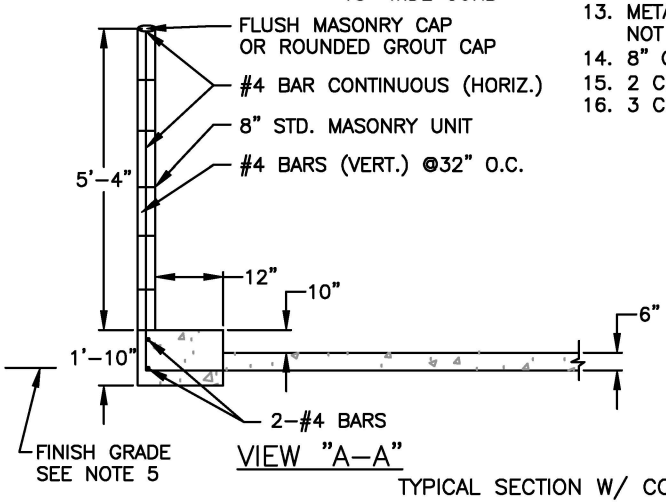

VIEW "A–A"

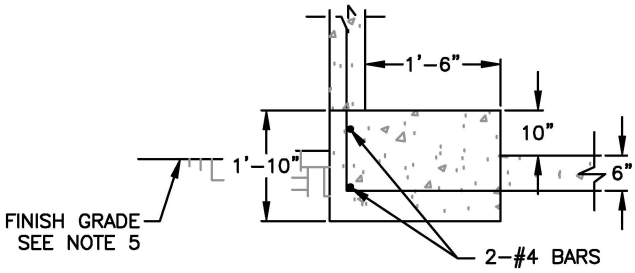

VIEW "B–B"

TYPICAL SECTION W/ CONCRETE BLOCK WALL

TYPICAL REFUSE CONTAINER ENCLOSURE DETAILS	REF. & REV. ~~AUG. 2010~~ MAR. 2021 (A.7)	CITY OF FRESNO P–33A

EXHIBIT "B"
MODIFIED TRASH/RECYCLING ENCLOSURE

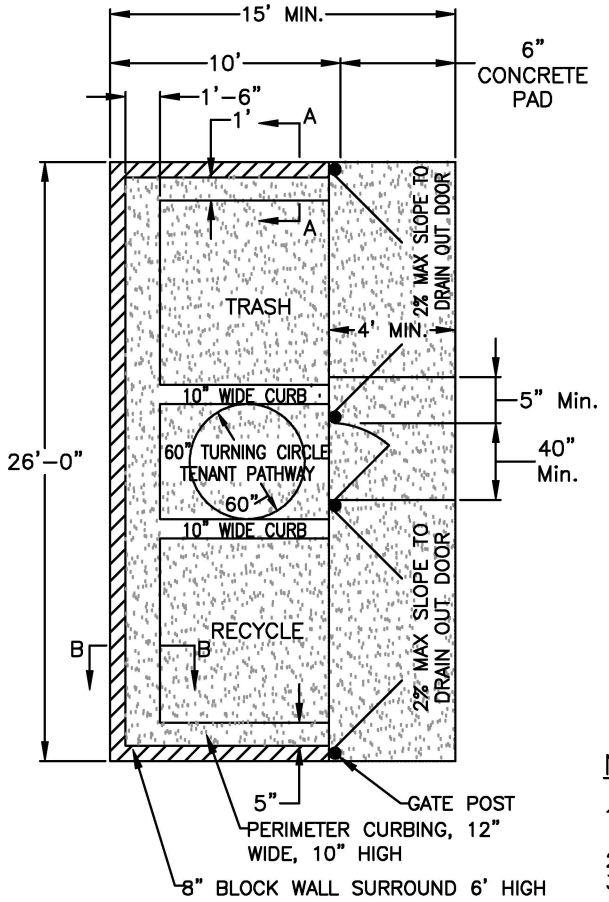

EXHIBIT "A"
MODIFIED TRASH/RECYCLING ENCLOSURE

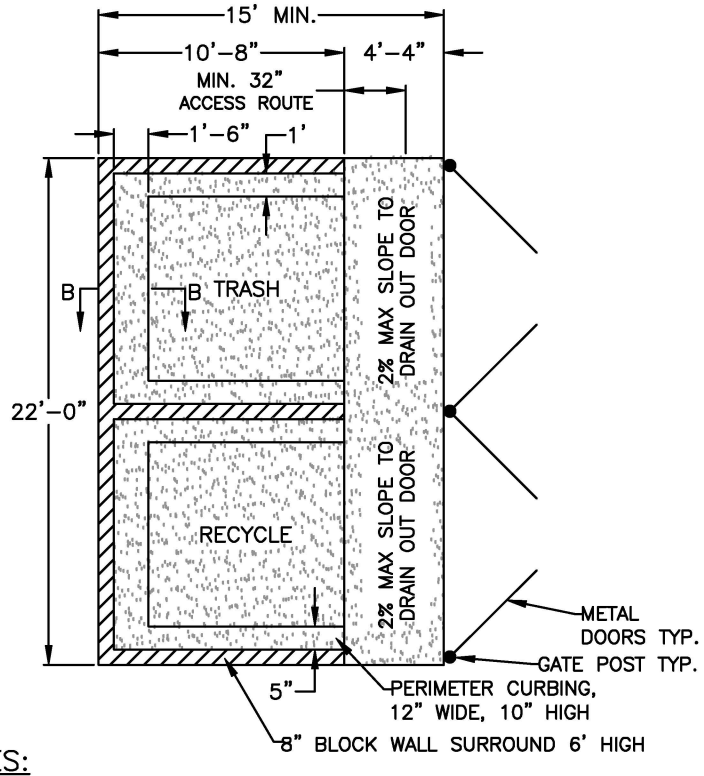

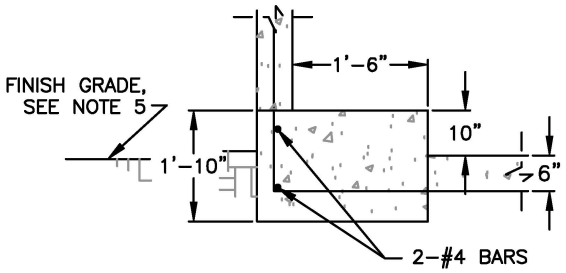

VIEW "B-B"

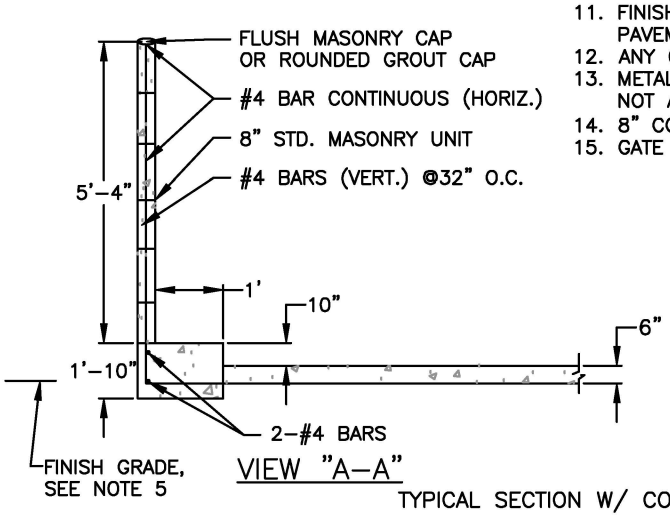

VIEW "A-A"

TYPICAL SECTION W/ CONCRETE BLOCK WALL

NOTES:

1. ALL CONSTRUCTION SHALL COMPLY WITH THE FRESNO MUNICIPAL CODE.
2. GROUT ALL CELLS.
3. ALL MASONRY UNITS SHALL COMPLY WITH THE LATEST ADOPTED CALIFORNIA BUILDING CODE AND U.B.C. STANDARD 24-4 GRADE N.
4. ALL MASONRY WALLS SHALL BE INSPECTED BY THE CITY OF FRESNO DEVELOPMENT DEPARTMENT.
5. DEPTH OF FOOTINGS ARE INTO NATURAL UNDISTURBED SOIL OR TESTED AND APPROVED COMPACTED FILL.
6. ALL MASONRY UNITS SHALL BE MINIMUM F'M=1500 PSI.
7. REINFORCING STEEL SHALL BE DEFORMED BAR, MIN. GRADE 40.
8. FOOTING CONCRETE SHALL BE A MINIMUM 2000 PSI AT 28 DAYS.
9. MORTAR SHALL BE TYPE-S (MINIMUM 1800 PSI AT 28 DAYS).
   ONE (1) PART CEMENT, TYPE-1
   ONE-HALF (1/2) PART LIME PUTTY OR HYDRATED LIME.
   FOUR AND ONE-HALF (4 1/2) PARTS SAND (MAXIMUM).
10. GROUT SHALL BE A MINIMUM 2000 PSI AT 28 DAYS.
    ONE (1) PART CEMENT.
    THREE (3) PARTS SAND.
    TWO (2) PARTS PEA GRAVEL.
11. FINISH PAD ELEVATION TO BE FLUSH WITH GRADE AT ACCESS PAVEMENT.
12. ANY GATE HINGES SHOULD BE LOCATED ON THE OUTSIDE.
13. METAL DOORS ARE REQUIRED ON ALL ENCLOSURES, CHAIN LINK IS NOT ACCEPTABLE.
14. 8" CONCRETE BLOCK TO BE USED FOR WALLS.
15. GATE HARDWARE SHALL COMPLY WITH 11-13 404.2.7 OF CBC 2016

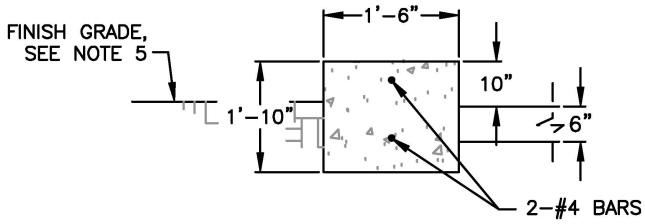

VIEW "C-C"

MULTI-FAMILY TYPICAL REFUSE CONTAINER ENCLOSURE DETAILS - EXHIBITS A & B	REF. & REV. MAR. 2021 (A.7)	CITY OF FRESNO P-33B

EXHIBIT "C"
MULTI-FAMILY TRASH/RECYCLING ENCLOSURE

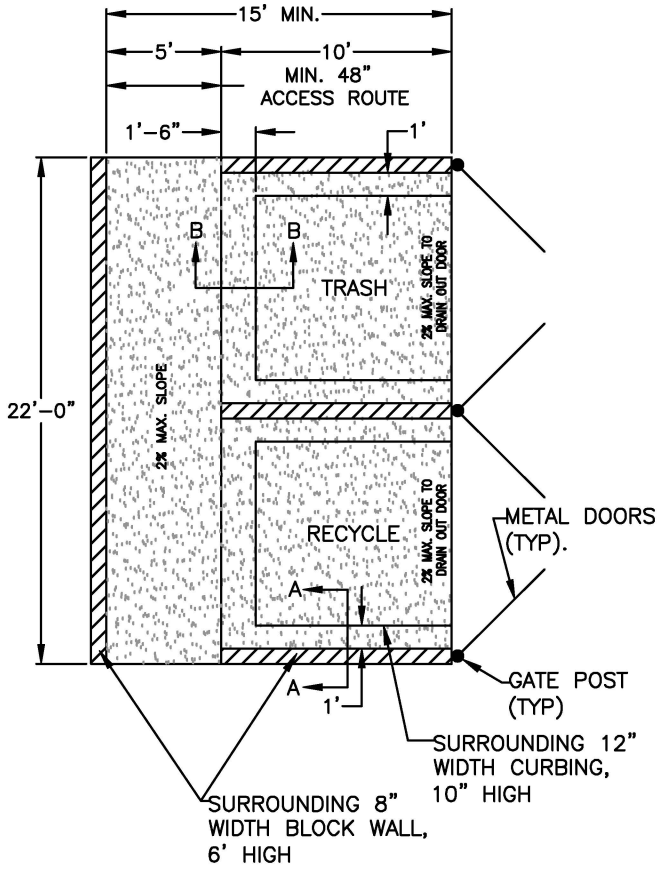

NOTES:

1. ALL CONSTRUCTION SHALL COMPLY WITH THE FRESNO MUNICIPAL CODE.
2. GROUT ALL CELLS.
3. ALL MASONRY UNITS SHALL COMPLY WITH THE LATEST ADOPTED CALIFORNIA BUILDING CODE AND U.B.C. STANDARD 24-4 GRADE N.
4. ALL MASONRY WALLS SHALL BE INSPECTED BY THE CITY OF FRESNO DEVELOPMENT DEPARTMENT.
5. DEPTH OF FOOTINGS ARE INTO NATURAL UNDISTURBED SOIL OR TESTED AND APPROVED COMPACTED FILL.
6. ALL MASONRY UNITS SHALL BE MINIMUM F'M=1500 PSI.
7. REINFORCING STEEL SHALL BE DEFORMED BAR, MIN. GRADE 40.
8. FOOTING CONCRETE SHALL BE A MINIMUM 2000 PSI AT 28 DAYS.
9. MORTAR SHALL BE TYPE-S (MINIMUM 1800 PSI AT 28 DAYS).
   ONE (1) PART CEMENT, TYPE-1
   ONE-HALF (1/2) PART LIME PUTTY OR HYDRATED LIME.
   FOUR AND ONE-HALF (4 1/2) PARTS SAND (MAXIMUM).
10. GROUT SHALL BE A MINIMUM 2000 PSI AT 28 DAYS.
    ONE (1) PART CEMENT.
    THREE (3) PARTS SAND.
    TWO (2) PARTS PEA GRAVEL.
11. FINISH PAD ELEVATION TO BE FLUSH WITH GRADE AT ACCESS PAVEMENT.
12. ANY GATE HINGES SHOULD BE LOCATED ON THE OUTSIDE.
13. METAL DOORS ARE REQUIRED ON ALL ENCLOSURES, CHAIN LINK IS NOT ACCEPTABLE.
14. 8" CONCRETE BLOCK TO BE USED FOR WALLS.
15. GATE HARDWARE SHALL COMPLY WITH 11-13 404.2.7 OF CBC 2016

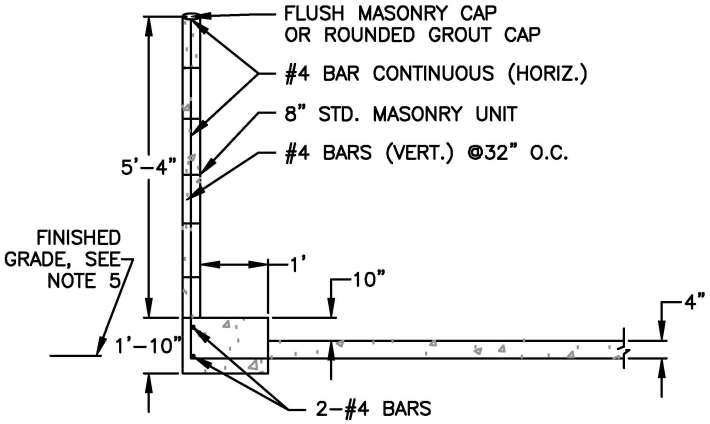

VIEW "A-A"

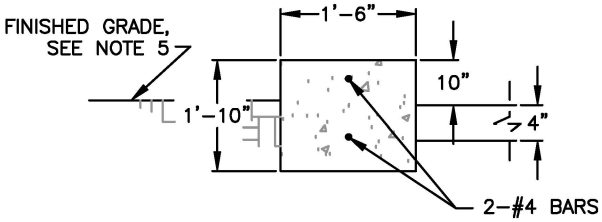

VIEW "B-B"

TYPICAL SECTION W/ CONCRETE BLOCK WALL

MULTI-FAMILY TYPICAL REFUSE CONTAINER ENCLOSURE DETAILS - EXHIBIT C	REF. & REV. MAR. 2021 (A.7)	CITY OF FRESNO P-33C

GENERAL NOTES:

1. ALL SITE PLANS SHALL HAVE THE SIGNATURE APPROVAL OF A SOLID WASTE MANAGEMENT DIVISION REPRESENTATIVE.
2. CONTAINERS USED AT ALL PLACES SHALL BE PLACED FOR COLLECTION AT SERVICE LOCATIONS APPROVED BY THE PUBLIC UTILITIES DIRECTOR, OR HIS/HER DESIGNEE, BUT SHALL NOT BE STORED IN THE PUBLIC RIGHT-OF-WAY.
3. THE DESIGN OF ANY NEW, SUBSTANTIALLY REMODELED, OR EXPANDED BUILDING OR OTHER FACILITY SHALL PROVIDE FOR PROPER STORAGE OR HANDLING WHICH WILL ACCOMMODATE THE SOLID WASTE LOADING ANTICIPATED AND WHICH WILL ALLOW FOR SAFE AND EFFICIENT WASTE REMOVAL.
4. THE PUBLIC UTILITIES DIRECTOR, OR HIS/HER DESIGNEE, SHALL PLAN WITH THE PROPERTY OWNER AND/OR THEIR REPRESENTATIVE AS TO PLACEMENT OF STORAGE CONTAINERS TO MINIMIZE TRAFFIC, AESTHETIC AND OTHER PROBLEMS BOTH ON THE PROPERTY, AND FOR THE GENERAL PUBLIC.
5. BELOW IS A CHECKLIST OF REQUIREMENTS REVIEWED FOR A SITE PLAN:
   a. REFUSE, RECYCLABLES, AND GREASE BARRELS SHALL BE STORED FOR LATER REMOVAL FROM THE PREMISES IN AN AREA THAT IS SCREENED FROM VIEW OF THE PUBLIC STREETS BY A CITY OF FRESNO, PUBLIC UTILITIES APPROVED STANDARD ENCLOSURE (REFER TO P-33, P-34, AND P-95 FOR DETAILS). APPROVED STANDARD ENCLOSURES ARE TO BE BUILT USING EIGHT INCH (8") CONCRETE BLOCK AT A HEIGHT OF SIX FEET (6').
   b. ENCLOSURES BUILT IN (INDUSTRIAL ZONES) M-1, M-2, M-3, AND CM ZONES REQUIRING DIRECTOR APPROVAL, OR HIS/HER DESIGNEE, MAY ELIMINATE WALLS AS LONG AS IT IS NOT VISIBLE FROM A MAIN STREET. FOR THIS DESIGN, THE CURBING WILL BE TWELVE INCHES (12") WIDE ON BOTH SIDES, EIGHTEEN INCHES (18") DEEP ALONG THE REAR WITH A THIRTY-TWO INCH (32") WIDE CURB SEPARATING THE TWO CELLS. CURBING MUST BE REINFORCED WITH REBAR AT A HEIGHT OF TEN INCHES (10"). ALL ENCLOSURES SHALL BE A MINIMUM OF EIGHTEEN INCHES (18") FROM THE NEAREST CURB. ALL OTHER PUBLIC WORKS DESIGN REQUIREMENTS SHALL BE MET DURING REVIEW.
   c. THE APPROVED STANDARD ENCLOSURE HAS BEEN DESIGNED TO ACCOMMODATE ALL SIZES OF CONTAINERS TO HANDLE THE ACCUMULATION OF WASTE AND RECYCLABLES GENERATE BETWEEN COLLECTIONS. A STORAGE AREA WITH INNER DIMENSIONS TEN FEET (10') BY TEN FEET (10') IS THE MINIMUM. THERE SHALL BE CURBING TWELVE INCHES (12") FROM SIDE WALLS AND EIGHTEEN INCHES (18") FROM REAR WALL AND AT A HEIGHT OF TEN INCHES (10"). THESE FEATURES ARE INCLUDED IN ORDER TO REDUCE THE POSSIBILITY OF DAMAGE TO THE ENCLOSURE ITSELF.
   d. SERVICE ACCESS TO ENCLOSURE SHALL BE A MINIMUM UNENCUMBERED OPENING OF EIGHT FEET (8'). THE GATE TO BE USED SHALL BE BUILT OF METAL, CHAIN LINK IS NOT ACCEPTABLE, SO THAT BINS CANNOT BE SEEN WHEN GATES ARE CLOSED AND SHALL BE MOUNTED ON THE OUTER SURFACE OF ENCLOSURE AS TO NOT PROTRUDE INTO SERVICE ACCESS OPENING. HARDWARE LATCHES SHOULD BE A HEAVY GAUGE LOCKING GATE LATCH. TWO GATES ARE REQUIRED ON EACH CELL WITH THE EXCEPTION OF THE GREASE BARREL CELL.
   e. THE FLOOR OR BOTTOM SURFACE OF THE COLLECTION AREA SHALL BE MADE OF CONCRETE, (SLOPED) ONE PERCENT (1%) TO THE FRONT, AND THERE SHALL NOT BE ANY DRAINAGE GUTTER IN FRONT OF ENTRANCE. THE UNENCUMBERED OPENING OF EIGHT FEET (8') REFERENCED IN D. ABOVE SHALL BE A LEVEL SURFACE. THE FLOOR SHALL NOT SLOPE TO THE BACK OR SIDES OF THE ENCLOSURE TO ALLOW DRAINAGE TO THE REAR OF THE AREA OR CAUSE ANY STANDING WATER WITHIN THE ENCLOSURE. IT SHALL BE CONSTRUCTED SO THE COLLECTION VEHICLE CAN DRIVE DIRECTLY INTO THE POCKETS OF THE CONTAINERS WITHOUT ANY OBSTRUCTIONS.
   f. INGRESS AND EGRESS SHALL HAVE AN UNOBSTRUCTED OVERHEAD CLEARANCE OF SIXTEEN FEET (16') AND SHALL NOT BE LESS THAN EIGHTEEN FREE (18') WIDE AND CAPABLE OF ACCOMMODATING A TRUCK WITH A TWO HUNDRED FIFTY INCH (250") WHEELBASE, A FORTY-FOUR FOOT (44') (CENTER LINE) TURNING RADIUS AND A SUPPORT WEIGHT OF THIRTY-FIVE (35) TONS. AREA SHALL BE UNOBSTRUCTED AND SO CONFIGURED THAT A TRUCK WILL BE ABLE TO MAKE A ROUND TRIP FROM THE PUBLIC RIGHT-OF-WAY TO THE COLLECTION ARE AND RETURN WITHOUT EXCESSIVE BACKING INTO A TRAFFIC LANE OR A PUBLIC THOROUGHFARE. BACKING AROUND A BUILDING IS NOT ALLOWED. AT NO TIME SHALL A TRUCK BE REQUIRED TO BACK IN EXCESS OF FORTY-FIVE FEET (45').
   g. BIN ENCLOSURE GATES AND SERVICE AREA SHALL NOT OPEN INTO OR BE A PART OF A PARKING STALL OR LOADING ZONE.
   h. GATED ENTRANCE/EXIT SERVICE SITES SHALL BE AT LEAST FORTY FEET (40') AWAY FROM ENTRANCES AND EXITS TO PREVENT TRUCKS FROM STICKING OUT INTO THE ROADWAY WHILE WAITING TO ACCESS ENCLOSURE AND ALLOW TRUCKS ENOUGH SPACE TO CLEAR GATE ON EXITING WHILE WAITING TO MERGE WITH TRAFFIC.
   i. THE ENCLOSURE(S) SHALL ACCOMMODATE REFUSE BINS, RECYCLE BINS, AND GREASE BARRELS WHEN APPLICABLE. NEITHER THE WASTE NOR RECYCLING CONTAINER SHALL BE REQUIRED TO BE MOVED IN ORDER TO SERVICE THE OTHER. GREASE BARRELS SHALL NOT BE PLACED IN THE SAME AREA OF THE ENCLOSURE WITH REFUSE OR RECYCLABLES.
   j. OWNER/OCCUPANTS SHALL NOT USE ENCLOSURES FOR STORAGE OR PLACE ANY MATERIALS AROUND THE TRASH, RECYCLE, OR GREASE CONTAINERS.
   k. SIGNAGE IS REQUIRED TO CLEARLY IDENTIFY ALL RECYCLING, SOLID WASTE COLLECTION, AND LOADING AREAS AND THE MATERIALS ACCEPTED THEREIN. THIS SIGNAGE SHALL BE PLACED AT ALL POINTS OF DIRECT ACCESS TO RECYCLING, SOLID WASTE, AND LOADING AREAS ON, OR ADJACENT TO, THE RECYCLABLE AND SOLID WASTE MATERIAL CONTAINERS.
   l. SITES UTILIZING COMPACTORS AND/OR ROLL-OFFS REQUIRE SIXTY FEET (60') OF CLEARANCE IN FRONT OF THE UNIT, AND A MINIMUM OF THREE FEET (3') ON EACH SIDE, FOR LOADING AND UNLOADING.

TYPICAL REFUSE ENCLOSURE DETAILS	REF. & REV. NOV. 2007	CITY OF FRESNO P-34

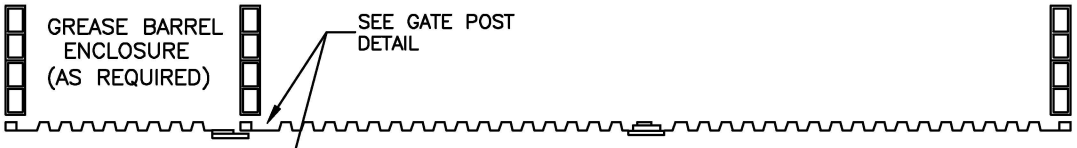

GATE PLAN VIEW

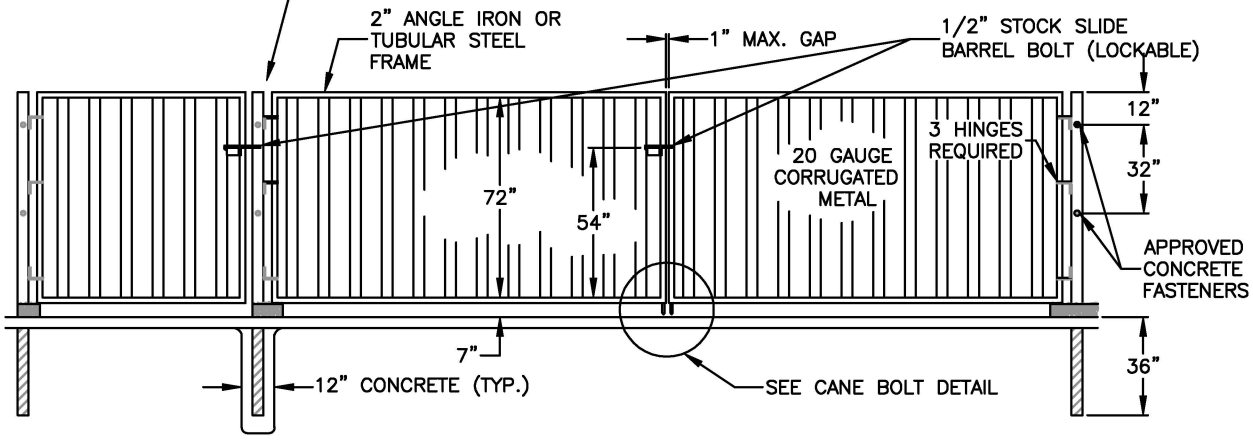

GATE LAYOUT

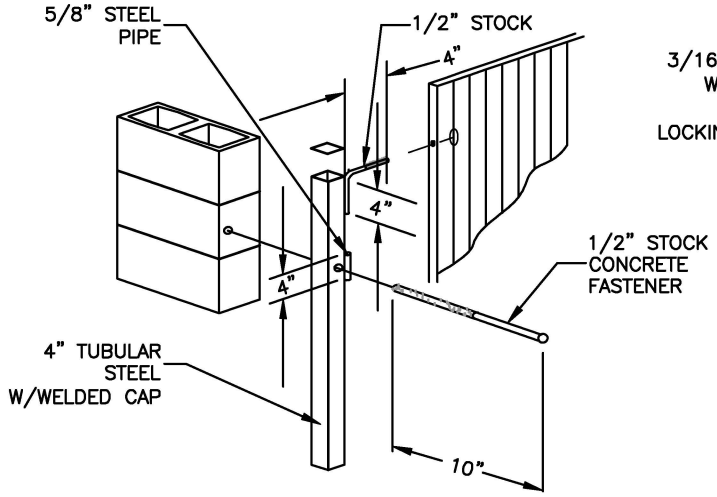

GATE POST DETAIL

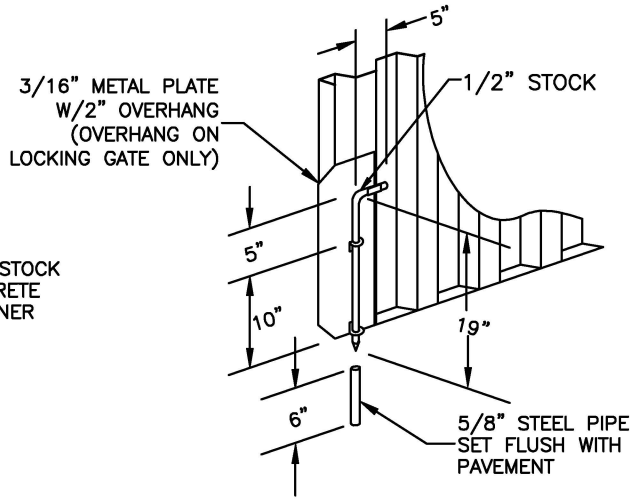

CANE BOLT DETAIL
(BOTH SIDES OF GATE)

NOTES:

1. GATES TO BE PAINTED TO MATCH BUILDING ACCENT FEATURES.
2. DESIGN, ENGINEERING AND CONSTRUCTION NOT SPECIFICALLY NOTED SHALL BE IN ACCORDANCE WITH ACCEPTED INDUSTRY STANDARDS AND OF FIRST QUALITY.
3. SECONDARY CANE BOLT RETAINER TO BE PLACED FOR EACH GATE SUCH THAT GATE IS HELD IN A POSITION 90° TO THE CLOSED POSITION.
4. TWO GATES ARE REQUIRED ON EACH CELL WITH THE EXCEPTION OF THE GREASE BARREL CELL.

TRASH ENCLOSURE GATE DETAILS	REF. & REV. AUG. 2010	CITY OF FRESNO P-35

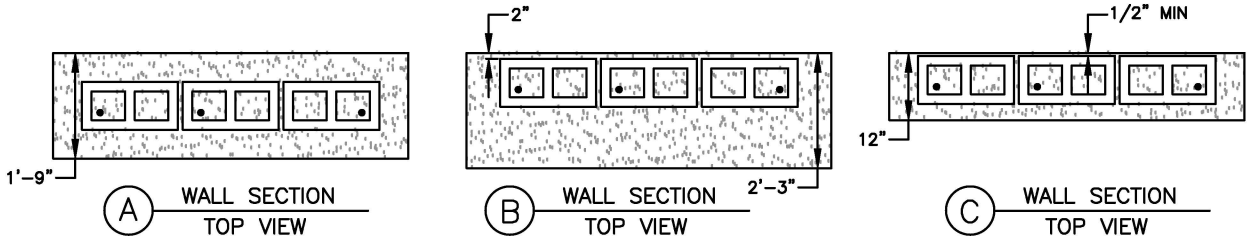

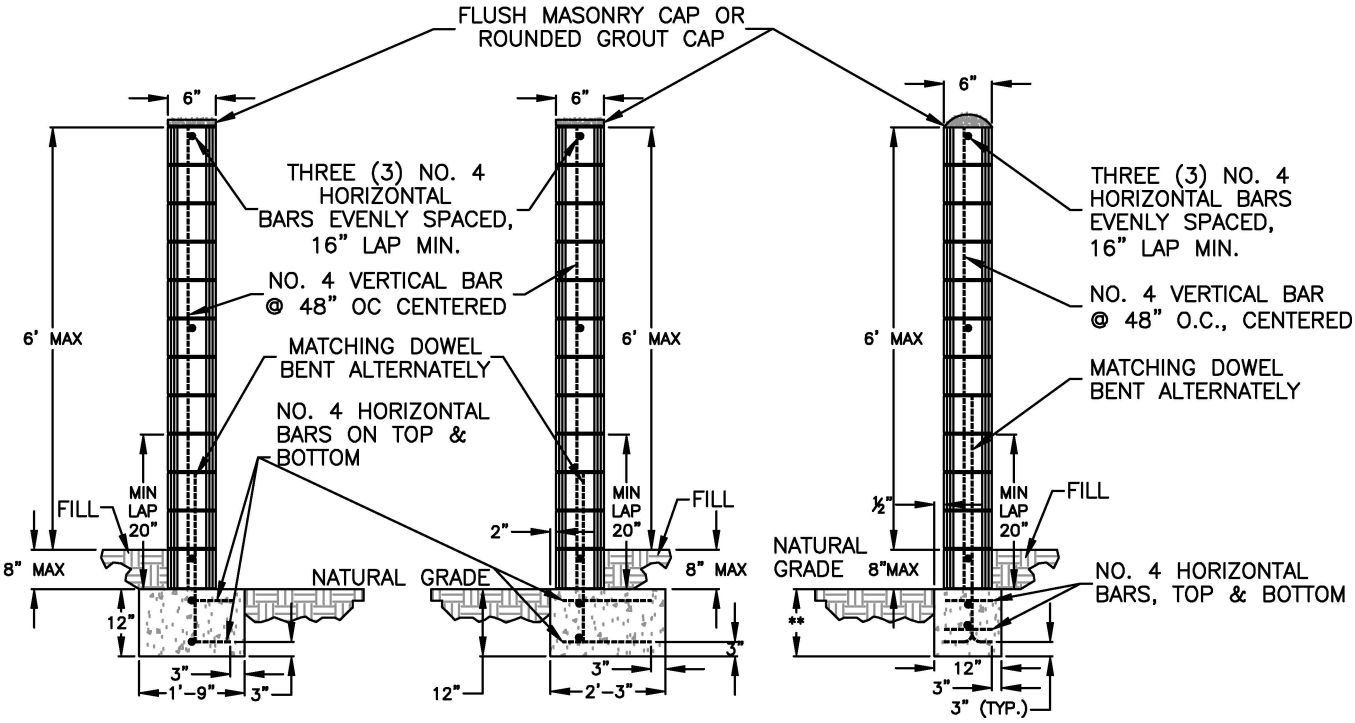

** 3'-2" MIN. AT LANDSCAPED AREA OR 2'-2" MIN. AT AREA W/PAVEMENT EACH SIDE

GENERAL NOTES AND SPECIFICATIONS:

1. ALL CONSTRUCTION SHALL COMPLY WITH THE FRESNO MUNICIPAL CODE.
2. GROUT ALL CELLS CONTAINING REINFORCING STEEL.
3. ALL MASONRY UNITS SHALL COMPLY WITH THE LATEST ADOPTED CALIFORNIA BUILDING CODE.
4. DEPTH OF FOOTINGS ARE INTO NATURAL UNDISTURBED SOIL OR TESTED AND APPROVED COMPACTED FILL.
5. ALL MASONRY UNITS SHALL BE MINIMUM F'm = 1,500 PSI.
6. REINFORCING BARS SHALL BE DEFORMED BARS MINIMUM GRADE 40.
7. FOOTING CONCRETE SHALL BE A MINIMUM 2,500 PSI AT 28 DAYS.
8. ALL CELLS SHALL BE GROUTED SOLID ON CITY OWNED WALLS.
9. MORTAR SHALL BE TYPE-S (MINIMUM 2,000 PSI AT 28 DAYS):
   - ONE (1) PART CEMENT, TYPE-1
   - ONE-HALF (1/2) PART LIME PUTTY OR HYDRATED LIME
   - FOUR AND ONE-HALF (4 1/2) PARTS SAND (MAXIMUM)
10. GROUT SHALL BE A MINIMUM 2,000 PSI AT 28 DAYS:
    - ONE (1) PART CEMENT
    - THREE (3) PARTS SAND
    - TWO (2) PARTS PEA GRAVEL.
11. PLEASE CONTACT THE DEVELOPMENT DEPARTMENT BUILDING DIVISION REGARDING THE APPLICABILITY AND USE OF THIS STANDARD AND ISSUANCE OF REQUIRED PERMITS.

6" CONCRETE MASONRY WALL WITH OR WITHOUT 8" MAX. SOIL RETENTION	REF. & REV. ~~SEP. 2011~~ MAR. 2021 (A.7)	CITY OF FRESNO P-93

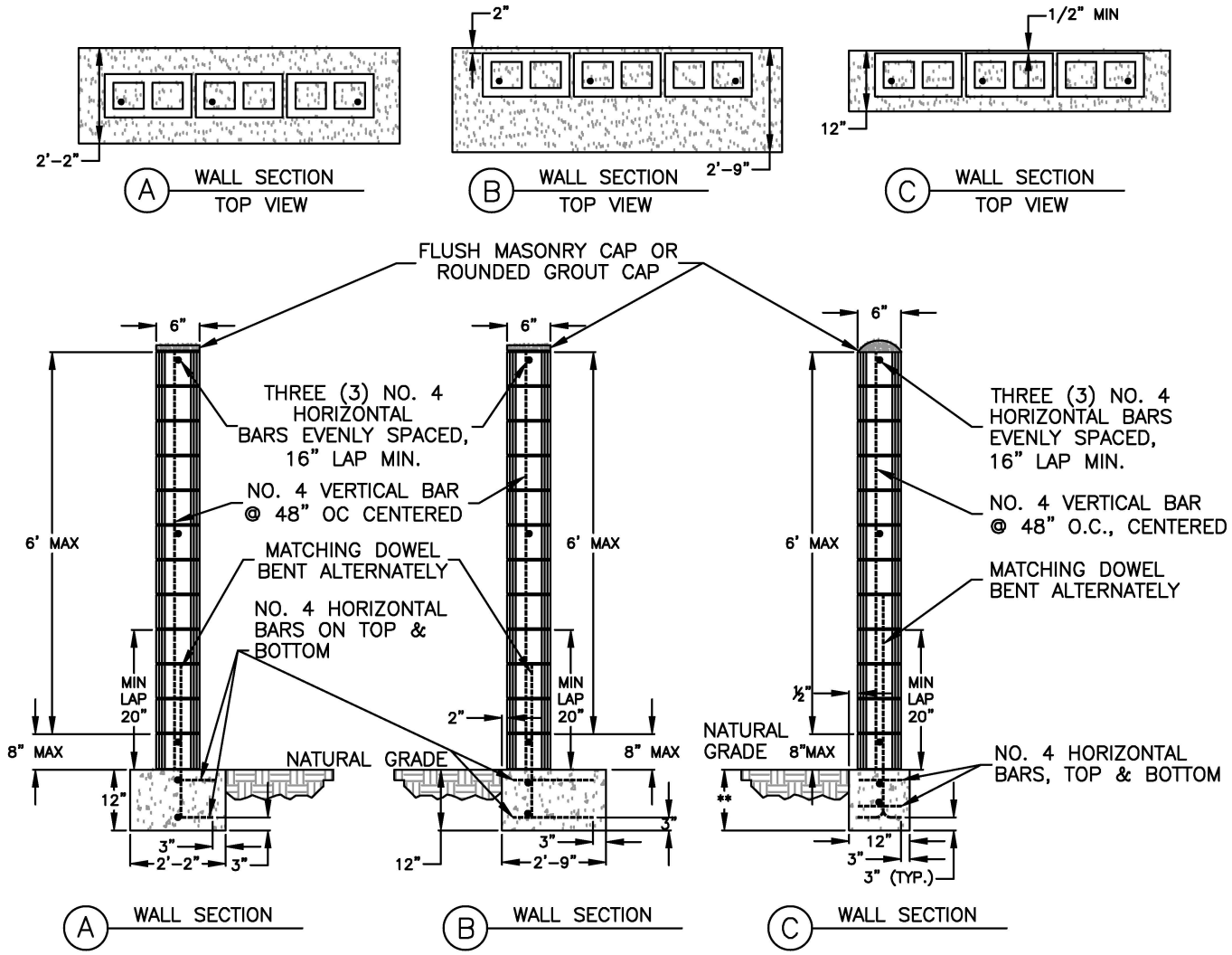

** 3'-2" MIN. AT LANDSCAPED AREA OR 2'-2" MIN. AT AREA W/PAVEMENT EACH SIDE

GENERAL NOTES AND SPECIFICATIONS:

1. ALL CONSTRUCTION SHALL COMPLY WITH THE FRESNO MUNICIPAL CODE.
2. GROUT ALL CELLS CONTAINING REINFORCING STEEL.
3. ALL MASONRY UNITS SHALL COMPLY WITH THE LATEST ADOPTED CALIFORNIA BUILDING CODE.
4. DEPTH OF FOOTINGS ARE INTO NATURAL UNDISTURBED SOIL OR TESTED AND APPROVED COMPACTED FILL.
5. ALL MASONRY UNITS SHALL BE MINIMUM F'm = 1,500 PSI.
6. REINFORCING BARS SHALL BE DEFORMED BARS MINIMUM GRADE 40.
7. FOOTING CONCRETE SHALL BE A MINIMUM 2,500 PSI AT 28 DAYS.
8. ALL CELLS SHALL BE GROUTED SOLID ON CITY OWNED WALLS.
9. MORTAR SHALL BE TYPE-S (MINIMUM 2,000 PSI AT 28 DAYS):
   - ONE (1) PART CEMENT, TYPE-1
   - ONE-HALF (1/2) PART LIME PUTTY OR HYDRATED LIME
   - FOUR AND ONE-HALF (4 1/2) PARTS SAND (MAXIMUM)
10. GROUT SHALL BE A MINIMUM 2,000 PSI AT 28 DAYS:
    - ONE (1) PART CEMENT
    - THREE (3) PARTS SAND
    - TWO (2) PARTS PEA GRAVEL.
11. PLEASE CONTACT THE DEVELOPMENT DEPARTMENT BUILDING DIVISION REGARDING THE APPLICABILITY AND USE OF THIS STANDARD AND ISSUANCE OF REQUIRED PERMITS.

6" CONCRETE MASONRY WALL WITHOUT SOIL RETENTION	REF. & REV. ~~SEP. 2011~~ MAR. 2021 (A.7)	CITY OF FRESNO P-94

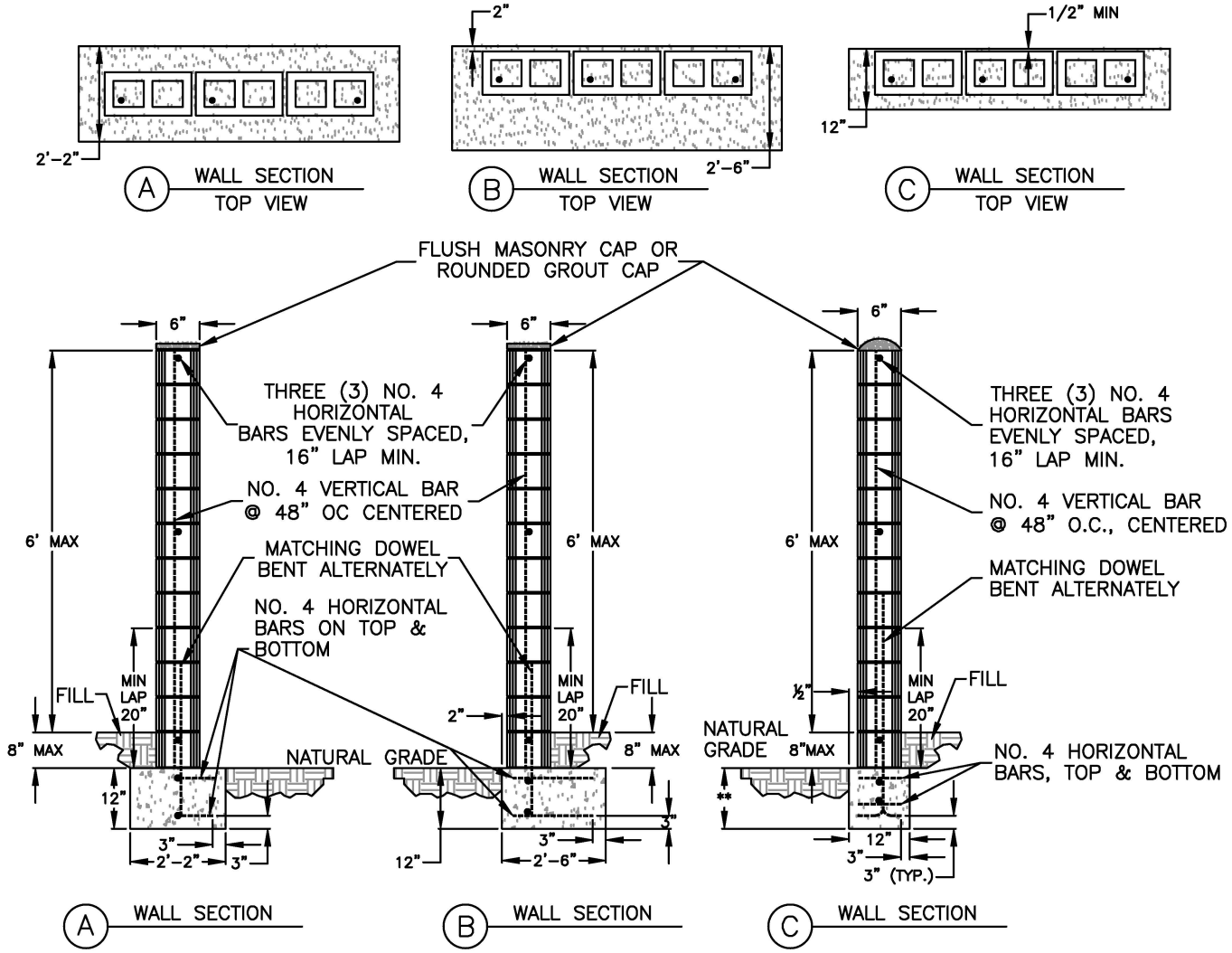

** 3'-2" MIN. AT LANDSCAPED AREA OR 2'-2" MIN. AT AREA W/PAVEMENT EACH SIDE

GENERAL NOTES AND SPECIFICATIONS:

1. ALL CONSTRUCTION SHALL COMPLY WITH THE FRESNO MUNICIPAL CODE.
2. GROUT ALL CELLS CONTAINING REINFORCING STEEL.
3. ALL MASONRY UNITS SHALL COMPLY WITH THE LATEST ADOPTED CALIFORNIA BUILDING CODE.
4. DEPTH OF FOOTINGS ARE INTO NATURAL UNDISTURBED SOIL OR TESTED AND APPROVED COMPACTED FILL.
5. ALL MASONRY UNITS SHALL BE MINIMUM F'm = 1,500 PSI.
6. REINFORCING BARS SHALL BE DEFORMED BARS MINIMUM GRADE 40.
7. FOOTING CONCRETE SHALL BE A MINIMUM 2,500 PSI AT 28 DAYS.
8. ALL CELLS SHALL BE GROUTED SOLID ON CITY OWNED WALLS.
9. MORTAR SHALL BE TYPE-S (MINIMUM 2,000 PSI AT 28 DAYS):
   - ONE (1) PART CEMENT, TYPE-1
   - ONE-HALF (1/2) PART LIME PUTTY OR HYDRATED LIME
   - FOUR AND ONE-HALF (4 1/2) PARTS SAND (MAXIMUM)
10. GROUT SHALL BE A MINIMUM 2,000 PSI AT 28 DAYS:
    - ONE (1) PART CEMENT
    - THREE (3) PARTS SAND
    - TWO (2) PARTS PEA GRAVEL.
11. PLEASE CONTACT THE DEVELOPMENT DEPARTMENT BUILDING DIVISION REGARDING THE APPLICABILITY AND USE OF THIS STANDARD AND ISSUANCE OF REQUIRED PERMITS.

6" CONCRETE MASONRY WALL WITH 8" MAX. SOIL RETENTION	REF. & REV. ~~SEP. 2011~~ MAR. 2021 (A.7)	CITY OF FRESNO P-95

File No. 210.412

FRESNO METROPOLITAN FLOOD CONTROL DISTRICT
NOTICE OF REQUIREMENTS

PUBLIC AGENCY

VALERIA RAMIREZ
PLANNING & DEVELOPMENT DEPARTMENT
CITY OF FRESNO
2600 FRESNO STREET, THIRD FLOOR
FRESNO, CA 93721-3604

DEVELOPER

TERRA MORTENSEN, GALLOWAY & COMPANY, INC.
7591 N. INGRAM AVE., SUITE 101
FRESNO, CA 93651

PROJECT NO: **2025-01774**

ADDRESS: **4092 N. CEDAR AVE.**

APN: **438-220-01, 09, 10, 438-220-08**

SENT: **August 15, 2025**

Drainage Area(s)	Preliminary Fee(s)	Development Review Service Charge(s)	Fee(s)	
JJ	$0.00	NOR Review	$50.00	To be paid prior to release of District comments to Public Agency and Developer.
		Grading Plan Review	$0.00	Amount to be submitted with first grading plan submittal.
	Total Drainage Fee: $0.00	**Total Service Charge: $50.00**		

The proposed development will generate storm runoff which produces potentially significant environmental impacts and which must be properly discharged and mitigated pursuant to the California Environmental Quality Act and the National Environmental Policy Act. The District in cooperation with the City and County has developed and adopted the Storm Drainage and Flood Control Master Plan. Compliance with and implementation of this Master Plan by this development project will satisfy the drainage related CEQA/NEPA impact of the project mitigation requirements.

Pursuant to the District's Development Review Fee Policy, the subject project shall pay review fees for issuance of this Notice of Requirements (NOR) and any plan submittals requiring the District's reviews. The NOR fee shall be paid to the District by Developer before the Notice of Requirement will be submitted to the City. The Grading Plan fee shall be paid upon first submittal. The Storm Drain Plan fee shall be paid prior to return/pick up of first submittal.

The proposed development shall pay drainage fees pursuant to the Drainage Fee Ordinance prior to issuance of a building permit at the rates in effect at the time of such issuance. The fee indicated above is valid through 2/28/26 based on the site plan submitted to the District on 7/28/25 Contact FMFCD for a revised fee in cases where changes are made in the proposed site plan which materially alter the proposed impervious area.

Considerations which may affect the fee obligation(s) or the timing or form of fee payment:

a.) Fees related to undeveloped or phased portions of the project may be deferrable.

b.) Fees may be calculated based on the actual percentage of runoff if different than that typical for the zone district under which the development is being undertaken and if permanent provisions are made to assure that the site remains in that configuration.

c.) Creditable storm drainage facilities may be constructed, or required to be constructed in lieu of paying fees.

d.) The actual cost incurred in constructing Creditable drainage system facilities is credited against the drainage fee obligation.

e.) When the actual costs incurred in constructing Creditable facilities exceeds the drainage fee obligation, reimbursement will be made for the excess costs from future fees collected by the District from other development.

f.) Any request for a drainage fee refund requires the entitlement cancellation and a written request addressed to the General Manager of the District within 60 days from payment of the fee. A non refundable $300 Administration fee or 5% of the refund whichever is less will be retained without fee credit.

FR DPA No. 2025-01774

FRESNO METROPOLITAN FLOOD CONTROL DISTRICT
NOTICE OF REQUIREMENTS

Approval of this development shall be conditioned upon compliance with these District Requirements.

1. X **a.** Drainage from the site shall BE DIRECTED TO CEDAR AVENUE AND/OR HAMPTON WAY.

___ **b.** Grading and drainage patterns shall be as identified on Exhibit No.

___ **c.** The grading and drainage patterns shown on the site plan conform to the adopted Storm Drainage and Flood Control Master Plan.

2. The proposed development shall construct and/or dedicate Storm Drainage and Flood Control Master Plan facilities located within the development or necessitated by any off-site improvements required by the approving agency:

___ Developer shall construct facilities as shown on Exhibit No. 1 as

X None required.

3. The following final improvement plans and information shall be submitted to the District for review prior to final development approval:

X Grading Plan

___ Street Plan

___ Storm Drain Plan

___ Water & Sewer Plan

___ Final Map

___ Drainage Report (to be submitted with tentative map)

___ Other

___ None Required

4. Availability of drainage facilities:

X **a.** Permanent drainage service is available provided the developer can verify to the satisfaction of the City that runoff can be safely conveyed to the Master Plan inlet(s).

___ **b.** The construction of facilities required by Paragraph No. 2 hereof will provide permanent drainage service.

___ **c.** Permanent drainage service will not be available. The District recommends temporary facilities until permanent service is available.

___ **d.** See Exhibit No. 2.

5. The proposed development:

___ Appears to be located within a 100 year flood prone area as designated on the latest Flood Insurance Rate Maps available to the District, necessitating appropriate floodplain management action. (See attached Floodplain Policy.)

X Does not appear to be located within a flood prone area.

6. ___ The subject site contains a portion of a canal or pipeline that is used to manage recharge, storm water, and/or flood flows. The existing capacity must be preserved as part of site development. Additionally, site development may not interfere with the ability to operate and maintain the canal or pipeline.

FR DPA No. 2025-01774

5469 E. OLIVE - FRESNO, CA 93727 - (559) 456-3292 - FAX (559) 456-3194

7. The Federal Clean Water Act and the State General Permits for Storm Water Discharges Associated with Construction and Industrial Activities (State General Permits) require developers of construction projects disturbing one or more acres, and discharges associated with industrial activity not otherwise exempt from National Pollutant Discharge Elimination System (NPDES) permitting, to implement controls to reduce pollutants, prohibit the discharge of waters other than storm water to the municipal storm drain system, and meet water quality standards. These requirements apply both to pollutants generated during construction, and to those which may be generated by operations at the development after construction.

a. State General Permit for Storm Water Discharges Associated with Construction Activities, effective July 1, 2010, as amended. A State General Construction Permit is required for all clearing, grading, and disturbances to the ground that result in soil disturbance of at least one acre (or less than one acre) if part of a larger common plan of development or sale). Permittees are required to: submit a Notice of Intent and Permit Registration Documents to be covered and must pay a permit fee to the State Water Resources Control Board (State Board), develop and implement a storm water pollution prevention plan, eliminate non-storm water discharges, conduct routine site inspections, train employees in permit compliance, and complete an annual certification of compliance.

b. State General Permit for Storm Water Discharges Associated with Industrial Activities, April, 2014 (available at the District Office). A State General Industrial Permit is required for specific types of industries described in the NPDES regulations or by Standard Industrial Classification (SIC) code. The following categories of industries are generally required to secure an industrial permit: manufacturing; trucking; recycling; and waste and hazardous waste management. Specific exemptions exist for manufacturing activities which occur entirely indoors. Permittees are required to: submit a Notice of Intent to be covered and must pay a permit fee to the State Water Resources Control Board, develop and implement a storm water pollution prevention plan, eliminate non-storm water discharges, conduct routine site inspections, train employees in permit compliance, sample storm water runoff and test it for pollutant indicators, and annually submit a report to the State Board.

c. The proposed development is encouraged to select and implement storm water quality controls recommended in the Fresno-Clovis Storm Water Quality Management Construction and Post-Construction Guidelines (available at the District Office) to meet the requirements of the State General Permits, eliminate the potential for non-storm water to enter the municipal storm drain system, and where possible minimize contact with materials which may contaminate storm water runoff.

8. A requirement of the District may be appealed by filing a written notice of appeal with the Secretary of the District within ten days of the date of this Notice of Requirements.

9. The District reserves the right to modify, reduce or add to these requirements, or revise fees, as necessary to accommodate changes made in the proposed development by the developer or requirements made by other agencies.

10. **X** See Exhibit No. 2 for additional comments, recommendations and requirements.

Debbie Campbell

Debbie Campbell
Design Engineer, RCE

Digitally signed by Debbie Campbell Date: 8/15/2025 3:14:57 PM

Gary Chapman

Gary W. Chapman
Engineering Tech III

Digitally signed by Gary W. Chapman Date: 8/15/2025 3:10:53 PM

CC:

ADAM WONG, STOCK FIVE HOLDINGS LLC G STOCKBRIDGE

2972 LARKIN AVE.

CLOVIS, CA 93612

FR DPA No. 2025-01774

OTHER REQUIREMENTS

EXHIBIT NO. 2

In an effort to improve storm runoff quality, outdoor storage areas shall be constructed and maintained such that material that may generate contaminants will be prevented from contact with rainfall and runoff and thereby prevent the conveyance of contaminants in runoff into the storm drain system.

The District encourages, but does not require that roof drains from non-residential development be constructed such that they are directed onto and through a landscaped grassy swale area to filter out pollutants from roof runoff.

Runoff from areas where industrial activities, product, or merchandise come into contact with and may contaminate storm water must be treated before discharging it off-site or into a storm drain. Roofs covering such areas are recommended. Cleaning of such areas by sweeping instead of washing is to be required unless such wash water can be directed to the sanitary sewer system. Storm drains receiving untreated runoff from such areas shall not be connected to the District's system. Loading docks, depressed areas, and areas servicing or fueling vehicles are specifically subject to these requirements. The District's policy governing said industrial site NPDES program requirements is available on the District's website at: www.fresnofloodcontrol.org or contact the District's Environmental Department for further information regarding these policies related to industrial site requirements.

2907 S. Maple Avenue
Fresno, California 93725-2208
Telephone: (559) 233-7161
Fax: (559) 233-8227

CONVEYANCE. COMMITMENT. CUSTOMER SERVICE.

August 14, 2025

Valeria Ramirez
City of Fresno
Department and Resource Management
2600 Fresno Street, Third Floor
Fresno, CA 93721

RE: Development Permit Application No. P25-01774
S/E Ashlan and Cedar avenues

Dear Ms. Ramirez:

The Fresno Irrigation District (FID) has reviewed the Development Permit Application No. P25-01774 for which the applicant proposes the construction of a single-story adult day care/healthcare facility, APNs: 438-220-01, 08, 09, 10. FID has the following comment:

1. FID does not own, operate, or maintain any facilities located on the subject property, as shown on the attached FID exhibit map.

2. For informational purposes, FID's active Gould Extension No. 151 runs southwesterly crossings Dakota Avenue and Cedar Avenue approximately 1,750 feet south of the subject property, as shown on the attached FID exhibit map. Should this project include any street and/or utility improvements along Dakota Avenue, Cedar Avenue, or in the vicinity of this facility, FID requires it review and approve all plans.

Thank you for submitting this for our review. We appreciate the opportunity to review and comment on the subject documents for the proposed project. If you have any questions, please feel free to contact Chris Lundeen at (559) 233-7161 extension 7410 or clundeen@fresnoirrigation.com.

Sincerely,

Laurence Kimura, P.E.
Chief Engineer

Attachment

G:\Agencies\FresnoCity\Development Permit Application\P25-01774\P25-01774 FID Comments.doc

BOARD OF DIRECTORS President RYAN JACOBSEN Vice-President JERRY PRIETO, JR. CHRISTOPHER WOOLF
GEORGE PORTER GREGORY BEBERIAN General Manager BILL STRETCH

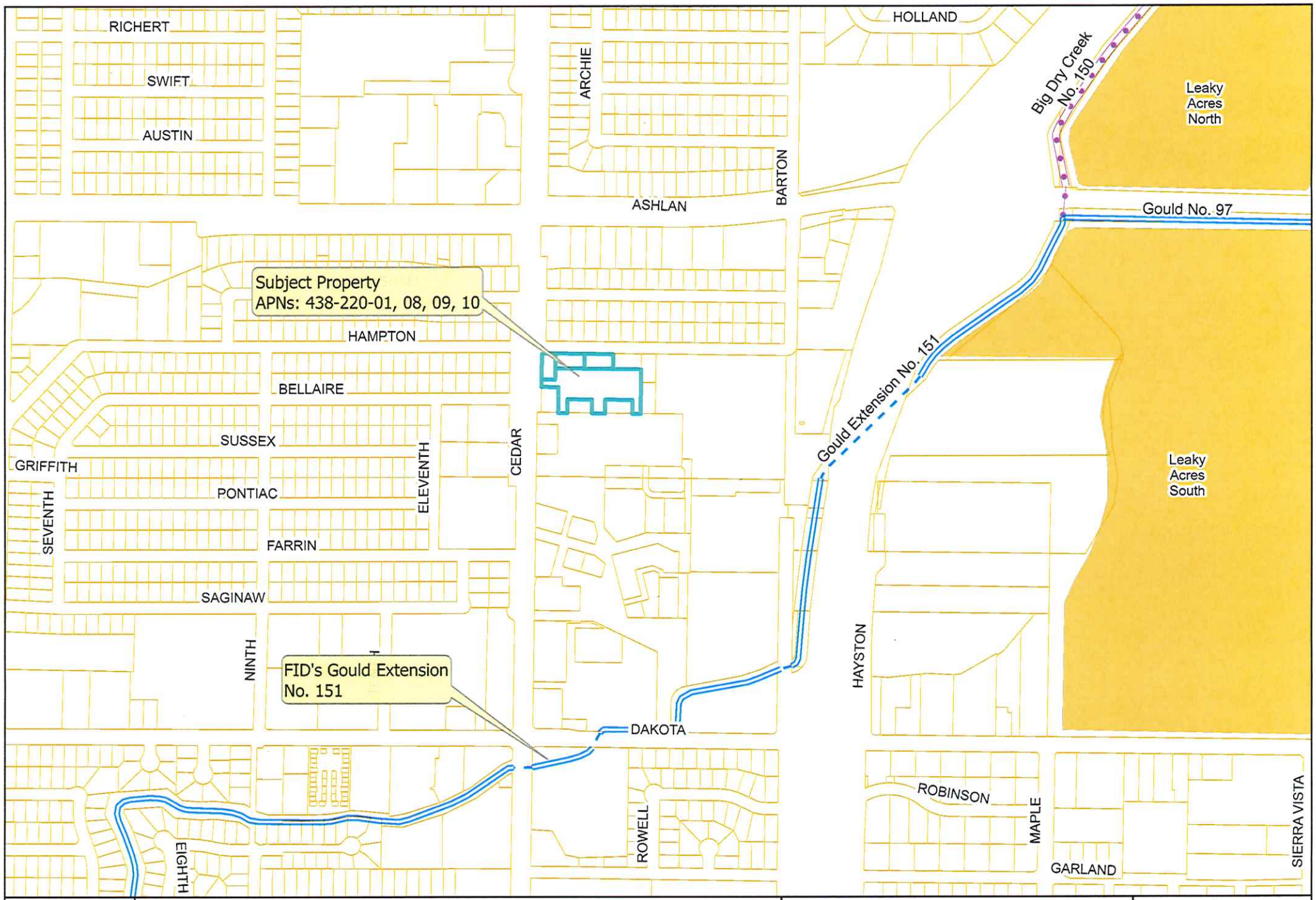

FRESNO IRRIGATION DISTRICT

Legend

- FID Canal
- Private Canal
- Abandoned Canal
- FID Pipeline
- Private Pipeline
- Abandoned Pipeline
- Stream Group
- Other-Creek\River
- Other-Pipeline
- FID Boundary
- Railroad
- Streets & Hwys
- Parcel
- FMFCD Acquired Basins
- FMFCD Proposed Basins

Spatial Reference:
Name: NAD 1983 StatePlane California IV FIPS 0404

This map was produced by the Fresno Irrigation District and is provided for reference and informational purposes only and is not intended to show map scale accuracy or all inclusive map features, nor for legal purposes. FID makes no statements regarding the accuracy of this map as the features shown are in their approximate location. Please contact the FID Engineering Dept. at (559) 233-7161 for further information on FID facilities.

Path: G:\Fidgis\ArcGIS Pro Master.aprx

N

0 275 550

Feet

Fresno Unified School District

Achieving our Greatest Potential!

BOARD OF EDUCATION
Valerie F. Davis, President
Genoveva Islas, Clerk
Keshia Thomas
Elizabeth Jonasson Rosas
Andy Levine
Claudia Cazares
Susan Wittrup

SUPERINTENDENT
Mao Misty Her

July 30, 2025

Valeria Ramirez
Development and Resource Management
City of Fresno
2600 Fresno Street, Third Floor
Fresno, CA 93721-3604

Re: **APPLICATION NO. P25-01774**
4092 N. CEDAR AVE.
APN: 438-220-01, -08, -09, -10

Dear Valeria Ramirez,

In response to your request for school district information regarding the above planning application for the proposed construction of a new 17,880 square-foot building for the "Granite Park PACE Center," with associated parking lot and trash enclosure improvements to be located at 4092 North Cedar Avenue, Fresno Unified School District submits the following.

Any new commercial development which occurs, may ultimately affect the District by generating employees. The children of those employees living in the District will need to be housed in District schools.

The District levies a commercial/industrial development fee and the current fee rate is $0.78 per square foot. Any new development on the property will be subject to the development fee prior to issuance of a building permit and fees will be calculated pursuant to the rate effective at the time of payment.

Thank you for the opportunity to comment. Please contact our office at (559) 457-6113 if you have any questions or require additional information regarding our comments.

Sincerely,

Alex Belanger, Chief Executive
Operational Services

AB:sdr
c: Terra Mortensen, Applicant/Agent

HH

City of FRESNO

SUBJECT: Conditions of Approval for **P25-01774**

DATE: August 18, 2025

TO: Valeria Ramirez, Planner II
Planning and Development Department

FROM: Leonel Arvizu, Engineer II
Public Works Department, Traffic Planning Section

ADDRESS: 4092 N Cedar Ave

APN: 438-220-01, 08, 09, 10

ATTENTION:
The items below require a separate process with additional fees and timelines, in addition to the development permit process. Submit the following items early to avoid delaying approval of building permits. Final approval of the site plan is contingent on receipt of all items checked below.

To be completed:	Point of Contact	Department and Contact Information
Cross Access Agreement Contact your planner regarding Cross Access Agreement requirements. **Lot Line Adjustment** Full off-site improvements are required for the existing lot of record. The parcel configuration depicted for the proposed development does not conform to record information. A Lot Line Adjustment is required; provide recorded documentation **prior** to Building Permits.	Valeria Ramirez	Planning and Development Department (559) 621-8046 Valeria.Ramirez@fresno.gov
Fresno Metropolitan Flood Control District When permanent facilities are not available from the Fresno Metropolitan Flood Control District, the applicant shall identify a temporary onsite storm water basin per *Public Works Standard* **P-97** for review and approval from Public Works, if applicable.	Melessa Avakian Kevin Rein	Public Works Department (559) 621-8812 Melessa.Avakian@fresno.gov Planning and Development Department (559) 621-8079 Kevin.Rein@fresno.gov

ATTENTION:
Provide corrections as noted on Exhibit "A".
Prior to resubmitting the corrected exhibit, provide the following information and conditions of approval on the site plan:

A. GENERAL REQUIREMENTS

1. **Address:** Verify the project address with the Planning and Development Department.
2. **Scope of work:** Identify all items as existing, proposed, to remain, or to be removed.
3. **Required Notes:** Revise General Notes to include the required Public Works Department notes.
   a. Provide a 4' minimum path of travel along the public sidewalk directly in front of property, to meet current accessibility regulations. A pedestrian easement may be required if requirements are not met.
   b. All existing sidewalks in excess of 2% maximum cross slope must be brought into compliance prior to acceptance by Public Works.
   c. All development shall take place in accordance with all city laws and regulations.

B. OFFSITE INFORMATION:

1. **Section and Center Lines:** Provide right-of-way dimensions.
2. **Public Street Improvements:**
   a. **Center section and median island:** Identify on the site plan.
   b. **Concrete curb, gutter, and sidewalk:** Provide dimensions
   c. **Sidewalk drains:**
   d. **Drive approach:**
   e. **Curb ramps:** Identify the curb ramp on the site plan and provide dimension.
   f. **Streetlights:**
3. **Accessibility:** Identify and dimension the required 4' minimum path of travel along the public sidewalk adjacent to the property. Provide pinch point dimensions. A pedestrian easement may be required if Title 24 requirements cannot be met.

C. ONSITE INFORMATION:

1. **Lot drainage:** Identify lot drainage conveyance to the right-of-way.
2. **State standard "STOP":** Identify and install a **30"** state standard "STOP" sign at the location shown. A "right turn only" sign is also required; install a **30" x 36"** state standard sign immediately below the stop sign on the same post. Signs shall be mounted on a **2"** galvanized post with the bottom of the lowest sign **7'**

above ground, located behind curb and immediately behind a major street sidewalk.

3. **Parking lot:**
    a. **Shared Access:** Provide proof of a cross-access agreement to the Planner.

PUBLIC IMPROVEMENT REQUIREMENTS

The following requirements are based on city records and the accuracy of the existing and proposed on-site and off-site conditions depicted on the exhibits submitted. Requirements not addressed due to omission or misrepresentation of information, on which this review process is dependent, will be imposed whenever such conditions are disclosed. Construct additional offsite improvements, including but not limited to, concrete curb, gutter, sidewalk, approaches, ramps, pavement, utility relocations, etc. in accordance with *City of Fresno's Public Works Standards, Specifications,* and the approved street plans.

Repair all damaged and/or off grade off-site concrete street or paved public pedestrian walkway improvements as determined by the City of Fresno Public Works Department, Construction Management Division, (559) 621-5600. Pedestrian paths of travel must also meet current accessibility regulations.

All existing sidewalks and trails in excess of 2% maximum cross slope must be brought into compliance **prior** to acceptance by Public Works.

Overhead utilities within the limits of this site/map shall follow Fresno Municipal Code Section 15-2017 and Public Works Policy No. 260.01. New service connections, transformers and related equipment shall be installed below grade per current PG&E standards.

The construction of any private overhead, surface or sub-surface structures, and appurtenances in the public right of way is prohibited unless an **Encroachment Covenant** is approved by the City of Fresno Public Works Department, Traffic and Engineering Services Division, (559) 621-8693. **Encroachment Covenant** must be approved **prior** to issuance of building permits.

Cedar Avenue: 4-Lane Arterial

(Provide the following as notes on the site plan.)

1. Construction Requirements:
    a. If not current to Public Works Standards, modify or replace the driveway approach to comply with *Public Works Standards* **P-2** and **P-6,** as approved on

the site plan. Construct a concrete pedestrian walkway behind all driveway approaches as identified on **Exhibit "A"**.

b. Where required, identify & construct sidewalk drains per *Public Works Standard* **P-23.**
c. Provide a **12**' visibility triangle at all driveways, per Fresno Municipal Code (FMC) 15-2018B.

Hampton Way: Local
(Provide the following as notes on the site plan.)

1. Construction Requirements:
   a. Where required, identify & construct sidewalk drains per *Public Works Standard* **P-23.**

The performance of any work within the public right of way and/or easements (including street, bike, pedestrian, landscape, and utility easements) requires a **Street Work Permit prior** to commencement of work. Contact Public Works Department at (559) 621-8800, 10 working days prior to construction of any improvements in the public right-of-way and/or easements. All improvements shall be constructed in accordance with the City of Fresno, *Public Works Department Standard Drawings and Specifications*. Traffic Control Plans shall be required to ensure the sidewalk, or an approved accessible path remains open during construction. Contact Aimee Scrivner at (559) 621-8702 or at Aimee.Scrivner@fresno.gov and submit Traffic Control Plans to the Traffic Operations and Planning Division. All work shall be reviewed, approved, completed, and accepted **prior** to obtaining a certificate of occupancy.

Two working days before commencing excavation operations within the street right of way and/or utility easements, all existing underground facilities shall have been located by Underground Services Alert (USA) Call 811.

Any survey monuments within the area of construction shall be preserved or reset by a person licensed to practice Land Surveying in the State of California.

PRIVATE IMPROVEMENT REQUIREMENTS

Off-Street Parking Facilities and Geometrics:

Contact the Planning and Development Department for review and approval of onsite parking. The parking lot is required to meet the *City of Fresno's Parking Manual, Public Works Standards (P-21, P-22, and P-23) and Specifications*. Parking must also comply with the *California Building Code's* accessibility requirements and the Fire and Solid Waste Department's minimum turning templates.

Traffic Signal Mitigation Impact (TSMI) Fee: This project shall pay all applicable TSMI Fees **at the time of building permit.** Contact the Public Works Department, Frank Saburit at (559)621-8797. The fees are based on the Master fee schedule.

Fresno Major Street Impact (FMSI) Fees: This entitlement is in the **Infill Area**; therefore, pay all applicable City-wide regional street impact fees. Contact the Public Works Department, Frank Saburit at (559) 621-8797.

Regional Transportation Mitigation Fee (RTMF): Pay all applicable **RTMF** fees to the Joint Powers Agency located at 2035 Tulare Street, Suite 201, Fresno, CA 93721; (559) 233-4148 ext. 200; www.fresnocog.org. Provide proof of payment or exemption **prior** to issuance of certificate of occupancy.

In order to obtain street or building permit approval from the Public Works Department, an approval stamp with a signature from Traffic Planning is required on the site plan and inserted in the building sets.

Questions relative to these conditions may be directed to Leonel Arvizu (559) 621-8662 Leonel.Arvizu@fresno.gov in the Public Works Department, Traffic Planning Section.

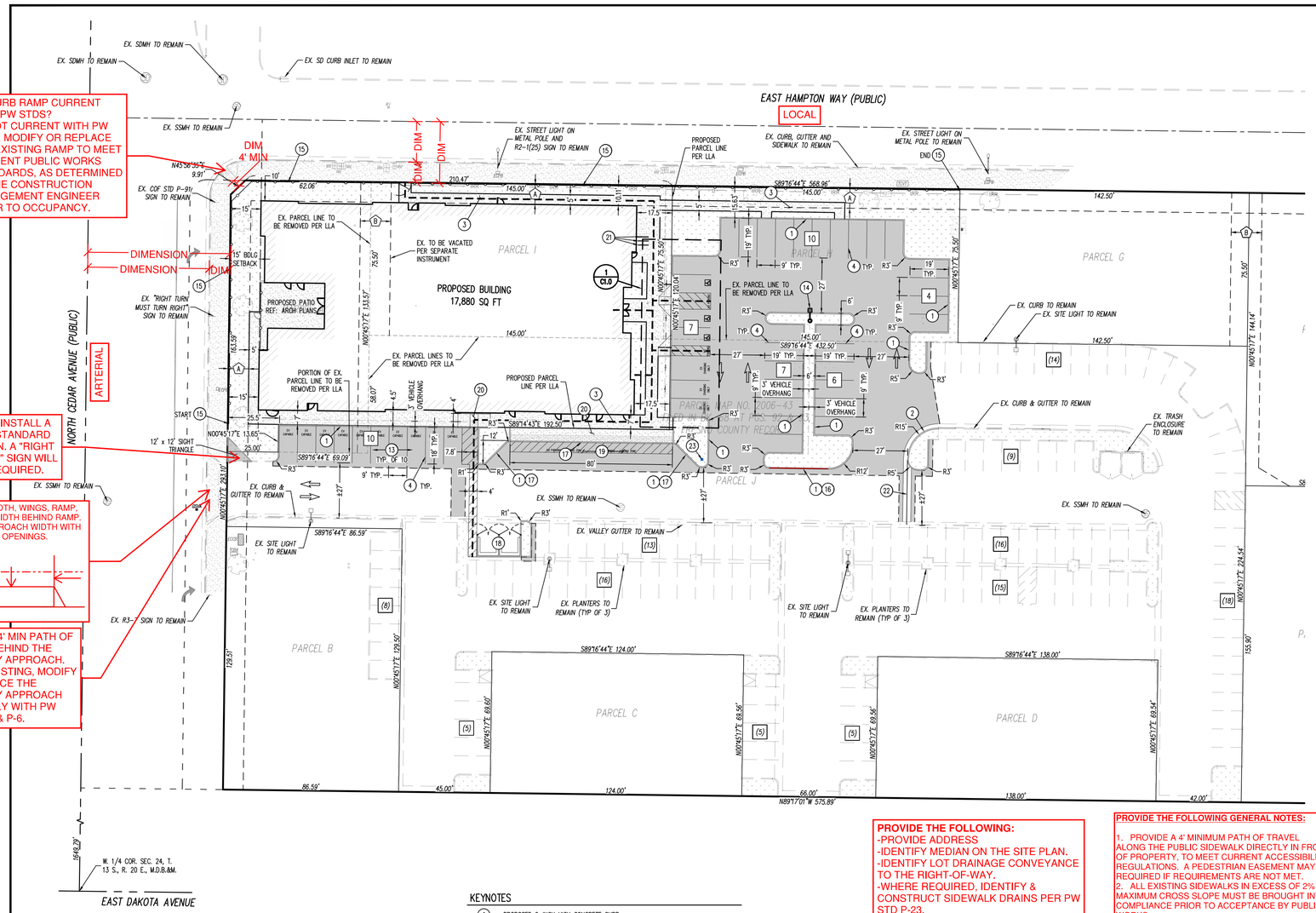

(E) CURB RAMP CURRENT WITH PW STDS?
-IF NOT CURRENT WITH PW STDS, MODIFY OR REPLACE THE EXISTING RAMP TO MEET CURRENT PUBLIC WORKS STANDARDS, AS DETERMINED BY THE CONSTRUCTION MANAGEMENT ENGINEER PRIOR TO OCCUPANCY.

IDENTIFY & INSTALL A 30" STATE STANDARD "STOP" SIGN. A "RIGHT TURN ONLY" SIGN WILL ALSO BE REQUIRED.

IDENTIFY WIDTH, WINGS, RAMP, SIDEWALK WIDTH BEHIND RAMP. LINE UP APPROACH WIDTH WITH THE ON-SITE OPENINGS.

IDENTIFY 4' MIN PATH OF TRAVEL BEHIND THE DRIVEWAY APPROACH. IF NOT EXISTING, MODIFY OR REPLACE THE DRIVEWAY APPROACH TO COMPLY WITH PW STDS P-2 & P-6.

PROVIDE THE FOLLOWING:
-PROVIDE ADDRESS
-IDENTIFY MEDIAN ON THE SITE PLAN.
-IDENTIFY LOT DRAINAGE CONVEYANCE TO THE RIGHT-OF-WAY.
-WHERE REQUIRED, IDENTIFY & CONSTRUCT SIDEWALK DRAINS PER PW STD P-23.

PROVIDE THE FOLLOWING GENERAL NOTES:

1. PROVIDE A 4' MINIMUM PATH OF TRAVEL ALONG THE PUBLIC SIDEWALK DIRECTLY IN FRONT OF PROPERTY, TO MEET CURRENT ACCESSIBILITY REGULATIONS. A PEDESTRIAN EASEMENT MAY BE REQUIRED IF REQUIREMENTS ARE NOT MET.
2. ALL EXISTING SIDEWALKS IN EXCESS OF 2% MAXIMUM CROSS SLOPE MUST BE BROUGHT INTO COMPLIANCE PRIOR TO ACCEPTANCE BY PUBLIC WORKS.
3. ALL DEVELOPMENT SHALL TAKE PLACE IN ACCORDANCE WITH ALL CITY LAWS AND REGULATIONS.

KEYNOTES

1. PROPOSED 6-INCH HIGH CONCRETE CURB.
2. PROPOSED 6-INCH HIGH CONCRETE CURB WITH 24-INCH WIDE GUTTER.
3. PROPOSED CONCRETE WALK (WIDTH PER PLAN).
4. PAINT 4-INCH WHITE PARKING STALL STRIPE
5. ACCESS AISLE PAINTED WITH 4-INCH WIDE BLUE STRIPE BORDER AND 4-INCH WIDE WHITE DIAGONAL LINES SPACED AT MAX 3-FOOT O.C.
6. INSTALL ACCESSIBLE STALL SIGNAGE. ACCESSIBLE PARKING ONLY/MINIMUM FINE COMBINATION SIGN (R99C(CA)) OR SIMILAR. VAN ACCESSIBLE STALL SHALL ALSO INCLUDE "VAN ACCESSIBLE" PLAQUE (R7-8B) BENEATH PARKING SIGN. BOTTOM OF LOWEST SIGN SHALL BE INSTALLED A MINIMUM OF 60" ABOVE FINISHED GRADE.
7. PAINT INTERNATIONAL SYMBOL OF ACCESSIBILITY PAVEMENT MARKING PER 2022 CBC 11B-502.6.4.1
8. PAINT "NO PARKING" IN MINIMUM 12-INCH HIGH WHITE LETTERS
9. PROPOSED VAN ACCESSIBLE PARKING STALL
10. PROPOSED ELECTRIC VEHICLE CHARGING STATION (EVCS)
11. INSTALL EV CHARGING SIGNAGE. NO PARKING EXCEPT EV CHARGING (R113(CA)) OR SIMILAR. BOTTOM OF LOWEST SIGN SHALL BE INSTALLED A MINIMUM OF 60" ABOVE FINISHED GRADE.
12. PAINT "EV CHARGING ONLY" IN MINIMUM 12-INCH HIGH WHITE LETTERS.
13. PROPOSED EV CAPABLE PARKING STALL
14. PROPOSED SITE LIGHT. REF: ELECTRICAL PLANS.
15. PROPOSED 6-FOOT TALL DECORATIVE IRON FENCE. REF: ARCHITECTURAL PLANS.
16. PAINT CURB RED WITH MINIMUM 4-INCH HIGH WHITE LETTERING READING "FIRE LANE - NO PARKING" AT MAXIMUM 50-FOOT INTERVALS
17. PAINT CURB YELLOW
18. PROPOSED 2-CELL TRASH ENCLOSURE PER CITY OF FRESNO PW STDS. P-33A, P-34 AND P-35
19. PROPOSED 80-FOOT BY 12-FOOT PASSENGER DROP OFF AND LOADING ZONE
20. PROPOSED PEDESTRIAN RAMP
21. PROPOSED BIKE RACKS. REF: ARCHITECTURAL PLANS
22. PROPOSED 48-INCH WIDE VALLEY GUTTER
23. PROPOSED LOCATION OF RELOCATED FIRE HYDRANT ASSEMBLY

PROJECT INFORMATION TABLE	
PROJECT NAME	GRANITE PARK P.A.C.E. FACILITY
SITE ADDRESS	SEC CEDAR AVENUE & HAMPTON WAY
ASSESSOR PARCEL NUMBERS	438-220-01, 08, 09, 10 (PORTION)

ZONING & LAND USE	EXISTING	PROPOSED
ZONING	O/cz (OFFICE/CONDITIONS OF ZONING)	O (OFFICE)
LAND USE	VACANT PARCEL, PARTIALLY IMPROVED PARKING LOT	ADULT DAYCARE FACILITY
SITE AREA	26,411 S.F. (0.61 GROSS ACRES)	26,411 S.F. (0.61 NET ACRES)

SITE COVERAGE	AREA	PERCENT COVERAGE
EXISTING BUILDING AREA	±0 S.F. (0.00 ACRES)	0%
PROPOSED BUILDING AREA	±17,896 S.F. (0.41 ACRES)	68%
LANDSCAPE AREA	±4,164 S.F. (0.10 ACRES)	16%
CONCRETE PAVEMENT	±3,588 S.F. (0.08 ACRES)	14%
ASPHALT PAVEMENT	0 S.F. (0.00 ACRES)	0%

PARKING SUMMARY TABLE			
TYPE	METHOD	REQUIRED	PROVIDED
VEHICLE	ADULT DAY CARE: 1 PER EMPLOYEE + 2 LOADING SPACES	50 + 2 LOADING	58 + 2 LOADING
ACCESSIBLE	TABLE 11B-208.2 & SEC. 11B-208.2.4, 2022 CBC	3 (1 VAN ACCESSIBLE)	3 (1 VAN ACCESSIBLE)
SHORT TERM BICYCLE	SEC. 5.106.4.1.1 2022 CALGREEN STANDARDS	2	3
LONG TERM BICYCLE	SEC. 5.106.4.1.2 2022 CALGREEN STANDARDS	2	2 (INTERIOR)
EV CAPABLE SPACES	TABLE 5.106.5.3.1 2022 CALGREEN STANDARDS	13	13
EVCS	TABLE 5.106.5.3.3 2022 CALGREEN STANDARDS	3	3

ATTENTION PLANNER:
THE FOLLOWING SHALL BE COMPLETED PRIOR TO SITE PLAN APPROVAL/STAMP:

✓ CROSS ACCESS ____ LOT MERGER
____ TRACT MAP ____ PARCEL MAP
✓ LOT LINE ADJUSTMENT

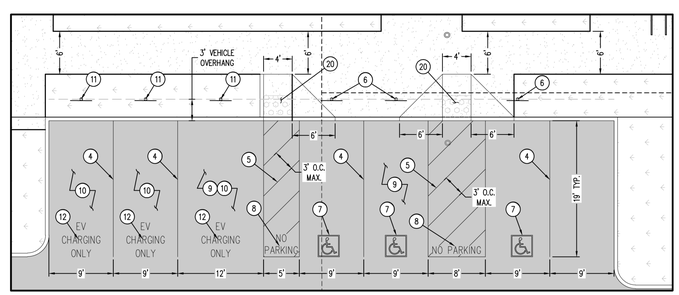

1 FRONT PARKING DETAIL
SCALE: 1" = 10'

N
SCALE: 1"=30'

LEGEND

- EXISTING PROPERTY LINE
- EXISTING CENTER LINE
- EXISTING SECTION LINE
- ADA PATH OF TRAVEL
- PROPOSED RED CURB
- PROPOSED LANDSCAPING
- PROPOSED CONCRETE PAVEMENT
- PROPOSED CONCRETE SIDEWALK
- PROPOSED ASPHALT CONCRETE
- # PROPOSED PARKING COUNT
- (#) EXISTING PARKING COUNT

ANY (P) SIDEWALK WITHIN THE ROW SHALL BE CONSTRUCTED PER PW STD P-5.

CONSTRUCT PER PW STDS P-21, P-22, & P-23.

PUBLIC WORKS GENERAL NOTES

1. ANY SURVEY MONUMENTS WITHIN THE AREA OF CONSTRUCTION SHALL BE PRESERVED OR RESET BY A PERSON LICENSED TO PRACTICE LAND SURVEYING IN THE STATE OF CALIFORNIA.
2. REPAIR ALL DAMAGED AND/OR OFF-GRADE CONCRETE STREET IMPROVEMENTS AS DETERMINED BY THE CONSTRUCTION MANAGEMENT ENGINEER, PRIOR TO OCCUPANCY.
3. TWO WORKING DAYS BEFORE COMMENCING EXCAVATION OPERATIONS WITHIN THE STREET RIGHT-OF WAY AND UTILITY EASEMENTS, ALL EXISTING UNDER-GROUND FACILITIES SHALL HAVE BEEN LOCATED BY UNDERGROUND SERVICES, 1-800-642-2444.
4. THE PERFORMANCE OF ANY WORK WITHIN THE PUBLIC STREET RIGHT-OF-WAY REQUIRES A STREET WORK PERMIT PRIOR TO COMMENCEMENT OF WORK. ALL REQUIRED STREET IMPROVEMENTS MUST BE COMPLETED AND ACCEPTED BY THE CITY PRIOR TO OCCUPANCY.
5. CONTACT THE PUBLIC WORKS DEPARTMENT, TRAFFIC ENGINEERING AT (559) 621-8800, 10 WORKING DAYS PRIOR TO ANY OFFSITE CONCRETE CONSTRUCTION.
6. FOR STANDARD DRAWINGS VISIT https://www.fresno.gov/wp-content/uploads/2025/01/City-of-Fresno-Standards-Vol-1-Std.-Drawings_JAN-2025.pdf
7. FOR TRAFFIC PLANNING'S WEBSITE WITH USEFUL LINKS, ADDITIONAL NOTES, SAMPLE OF LEGEND, PARKING MANUAL AND TRAFFIC STUDY CHECKLIST VISIT https://www.fresno.gov/publicworks/traffic-engineering/#tab-2
8. TRAFFIC PLANNING CHECKLIST LINK: http://www.fresno.gov/publicworks/wp-content/uploads/sites/17/2019/04/Traffic-Planning-Checklist-04-19.pdf19.pdf
9. FOR TRAFFIC STUDY QUESTIONS PLEASE CONTACT JILL GORMLEY AT (559) 621-8792 OR VIA EMAIL AT JILL.GORMLEY@FRESNO.GOV.

GENERAL NOTES

1. APPROVAL OF THIS SPECIAL PERMIT MAY BECOME NULL AND VOID IN THE EVENT THAT DEVELOPMENT IS NOT COMPLETED IN ACCORDANCE WITH ALL THE CONDITIONS AND REQUIREMENTS IMPOSED ON THIS SPECIAL PERMIT, THE CITYWIDE DEVELOPMENT CODE, AND ALL PUBLIC WORKS STANDARDS AND SPECIFICATIONS. THIS SPECIAL PERMIT IS GRANTED, AND THE CONDITIONS IMPOSED, BASED UPON THE OPERATIONAL STATEMENT PROVIDED BY THE APPLICANT. THE OPERATIONAL STATEMENT IS MATERIAL TO THE ISSUANCE OF THIS SPECIAL PERMIT. UNLESS THE CONDITIONS OF APPROVAL SPECIFICALLY REQUIRE OPERATION INCONSISTENT WITH THE OPERATIONAL STATEMENT, A NEW OR REVISED SPECIAL PERMIT IS REQUIRED IF THE OPERATION OF THIS ESTABLISHMENT CHANGES OR BECOMES INCONSISTENT WITH THE OPERATIONAL STATEMENT. FAILURE TO OPERATE IN ACCORDANCE WITH THE CONDITIONS AND REQUIREMENTS IMPOSED MAY RESULT IN REVOCATION OF THE SPECIAL PERMIT OR ANY OTHER ENFORCEMENT REMEDY AVAILABLE UNDER THE LAW. THE PLANNING AND DEVELOPMENT DEPARTMENT SHALL NOT ASSUME RESPONSIBILITY FOR ANY DELETIONS OR OMISSIONS RESULTING FROM THE SPECIAL PERMIT REVIEW PROCESS OR FOR ADDITIONS OR ALTERATIONS TO CONSTRUCTION PLANS NOT SPECIFICALLY SUBMITTED AND REVIEWED AND APPROVED PURSUANT TO THIS SPECIAL PERMIT OR SUBSEQUENT AMENDMENTS OR REVISIONS.
2. APPROVAL OF THIS SPECIAL PERMIT SHALL BE CONSIDERED NULL AND VOID IN THE EVENT OF FAILURE BY THE APPLICANT AND/OR THE AUTHORIZED REPRESENTATIVE, ARCHITECT, ENGINEER, OR DESIGNER TO DISCLOSE AND DELINEATE ALL FACTS AND INFORMATION RELATING TO THE SUBJECT PROPERTY AND THE PROPOSED DEVELOPMENT INCLUDING, BUT NOT LIMITED TO, THE FOLLOWING:
   a) ALL EXISTING AND PROPOSED IMPROVEMENTS INCLUDING BUT NOT LIMITED TO BUILDINGS AND STRUCTURES, SIGNS AND THEIR USES, TREES, WALLS, DRIVEWAYS, OUTDOOR STORAGE, AND OPEN LAND USE AREAS ON THE SUBJECT PROPERTY AND ALL OF THE PRECEDING WHICH ARE LOCATED ON ADJOINING PROPERTY AND MAY ENCROACH ON THE SUBJECT PROPERTY.
   b) ALL PUBLIC AND PRIVATE EASEMENTS, RIGHTS-OF-WAY AND ANY ACTUAL OR POTENTIAL PRESCRIPTIVE EASEMENTS OR USES OF THE SUBJECT PROPERTY; AND,
   c) EXISTING AND PROPOSED GRADE DIFFERENTIALS BETWEEN THE SUBJECT PROPERTY AND ADJOINING PROPERTY ZONED OR PLANNED FOR RESIDENTIAL USE.
3. NO LAND SHALL BE USED, AND NO STRUCTURE SHALL BE CONSTRUCTED, OCCUPIED, ENLARGED, ALTERED, DEMOLISHED, OR MOVED IN ANY ZONING DISTRICT, EXCEPT IN ACCORDANCE WITH THE PROVISIONS OF THIS CODE. SPECIFIC USES OF LAND, BUILDINGS, AND STRUCTURES LISTED AS PROHIBITED IN ANY ZONING DISTRICT ARE HEREBY DECLARED TO BE DETRIMENTAL TO THE PUBLIC HEALTH, SAFETY, AND WELFARE.
4. DEVELOPMENT SHALL TAKE PLACE IN ACCORDANCE WITH THE STANDARDS, SPECIFICATIONS, AND STANDARD DRAWINGS OF THE CITY OF FRESNO PUBLIC WORKS DEPARTMENT;
5. DEVELOPMENT SHALL TAKE PLACE IN ACCORDANCE WITH ALL CITY, COUNTY, STATE AND FEDERAL LAWS AND REGULATIONS.
6. OWNERS AND PERSONS HAVING OWNERSHIP INTEREST IN BUSINESSES OPERATING IN THE CITY OF FRESNO ARE REQUIRED BY THE FRESNO MUNICIPAL CODE TO OBTAIN A BUSINESS TAX CERTIFICATE. CONTACT THE CITY OF FRESNO FINANCE DEPARTMENT'S BUSINESS TAX DIVISION AT (559) 621-6880 FOR MORE INFORMATION. INFORMATION AND AN APPLICATION FORM ARE AVAILABLE ON THE CITY'S WEBSITE.
7. ALL PROPOSED BUILDING(S) OR STRUCTURE(S) CONSTRUCTED ON THE PROPERTY MUST COMPLY WITH THE PREVAILING CALIFORNIA BUILDING CODE STANDARDS.
8. ANY BUILDING MODIFICATIONS AND/OR ADDITIONS NOT INCLUDED WITH THIS APPLICATION ARE NOT APPROVED WITH THIS SPECIAL PERMIT AND WOULD BE SUBJECT TO A NEW SPECIAL PERMIT.
9. A PERMIT GRANTED UNDER THE FRESNO MUNICIPAL CODE SHALL AUTOMATICALLY EXPIRE IF IT IS NOT EXERCISED OR EXTENDED WITHIN THREE YEARS OF ITS ISSUANCE. REFER TO SECTION 15-5013, EXPIRATION OF PLANNING ENTITLEMENTS, FOR MORE INFORMATION ABOUT THE EXERCISE OF RIGHTS.
10. ALL ACCESSIBLE STALLS SHALL BE MARKED WITH THE INTERNATIONAL SYMBOL OF SPACES AND A WARNING THAT VEHICLES IN VIOLATION OF SECTION 10-1017 OF THE FRESNO MUNICIPAL CODE SHALL BE TOWED AWAY. THE INTERNATIONAL SYMBOL AND TOW-AWAY WARNING SHALL BE POSTED CONSPICUOUSLY ON SEVEN-FOOT POLES.
11. APPLICANTS ARE ENCOURAGED TO PROVIDE SHARED VEHICLE AND PEDESTRIAN ACCESS BETWEEN ADJACENT PROPERTIES FOR CONVENIENCE, SAFETY, AND EFFICIENT CIRCULATION. A JOINT ACCESS COVENANT SHALL BE REQUIRED.
12. SIGNS, OTHER THAN DIRECTIONAL SIGNS, IF APPLICABLE, ARE NOT APPROVED FOR INSTALLATION AS PART OF THIS SPECIAL PERMIT.
13. IF ARCHAEOLOGICAL AND/OR ANIMAL FOSSIL MATERIAL IS ENCOUNTERED DURING PROJECT SURVEYING, GRADING, EXCAVATING, OR CONSTRUCTION, WORK SHALL STOP IMMEDIATELY.
14. IF THERE ARE SUSPECTED HUMAN REMAINS, THE FRESNO COUNTY CORONER SHALL BE IMMEDIATELY CONTACTED. IF THE REMAINS OR OTHER ARCHAEOLOGICAL MATERIAL IS POSSIBLY NATIVE AMERICAN IN ORIGIN, THE NATIVE AMERICAN HERITAGE COMMISSION (PHONE: (916) 653-4082) SHALL BE IMMEDIATELY CONTACTED, AND THE CALIFORNIA ARCHAEOLOGICAL INVENTORY/SOUTHERN SAN JOAQUIN VALLEY INFORMATION CENTER (PHONE: (805) 644-2289) SHALL BE CONTACTED TO OBTAIN A REFERRAL LIST OF RECOGNIZED ARCHAEOLOGISTS. AN ARCHEOLOGICAL ASSESSMENT SHALL BE CONDUCTED FOR THE PROJECT, THE SITE SHALL BE FORMALLY RECORDED, AND RECOMMENDATIONS MADE TO THE CITY AS TO ANY FURTHER SITE INVESTIGATION OR SITE AVOIDANCE/PRESERVATION.
15. IF ANIMAL FOSSILS ARE UNCOVERED, THE MUSEUM OF PALEONTOLOGY, U.C. BERKELEY SHALL BE CONTACTED TO OBTAIN A REFERRAL LIST OF RECOGNIZED PALEONTOLOGISTS. AN ASSESSMENT SHALL BE CONDUCTED BY A PALEONTOLOGIST AND, IF THE PALEONTOLOGIST DETERMINES THE MATERIAL TO BE SIGNIFICANT, IT SHALL BE PRESERVED.

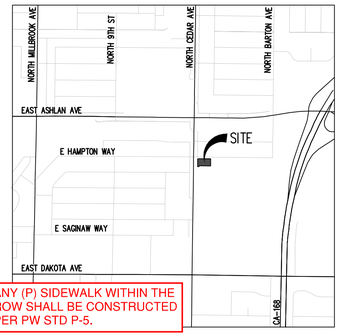

VICINITY MAP
NOT TO SCALE

OWNER/APPLICANT
STOCK FIVE DEVELOPMENT, INC
2972 LARKIN AVENUE
CLOVIS, CA 93612
ATTN: GUY STOCKBRIDGE
TEL: (559) 292-2900

PREPARED BY
GALLOWAY & COMPANY, INC
575 E. LOCUST AVENUE, SUITE 103
FRESNO, CA 93720
ATTN: TERRA MORTENSEN, PE
TEL: (559) 721-5030

LEGAL DESCRIPTION

PARCEL A
THE LAND DESCRIBED HEREIN IS SITUATED IN THE STATE OF CALIFORNIA, COUNTY OF FRESNO, CITY OF FRESNO, DESCRIBED AS FOLLOWS:

PARCEL A AS SHOWN ON PARCEL MAP NO. 2006-43 FILED IN THE OFFICE OF THE FRESNO COUNTY RECORDER ON AUGUST 8, 2008, IN BOO 68, OF PARCEL MAPS, AT PAGES 92 AND 93, RECORDS OF SAID COUNTY.

APN: 438-220-01

PARCEL H
THE LAND DESCRIBED HEREIN IS SITUATED IN THE STATE OF CALIFORNIA, COUNTY OF FRESNO, CITY OF FRESNO, DESCRIBED AS FOLLOWS:

PARCEL H AS SHOWN ON PARCEL MAP NO. 2006-43 FILED IN THE OFFICE OF THE FRESNO COUNTY RECORDER ON AUGUST 8, 2008, IN BOO 68, OF PARCEL MAPS, AT PAGES 92 AND 93, RECORDS OF SAID COUNTY.

APN: 438-220-08

PARCEL I
THE LAND DESCRIBED HEREIN IS SITUATED IN THE STATE OF CALIFORNIA, COUNTY OF FRESNO, CITY OF FRESNO, DESCRIBED AS FOLLOWS:

PARCEL I AS SHOWN ON PARCEL MAP NO. 2006-43 FILED IN THE OFFICE OF THE FRESNO COUNTY RECORDER ON AUGUST 8, 2008, IN BOO 68, OF PARCEL MAPS, AT PAGES 92 AND 93, RECORDS OF SAID COUNTY.

APN: 438-220-09

PARCEL J
THE LAND DESCRIBED HEREIN IS SITUATED IN THE STATE OF CALIFORNIA, COUNTY OF FRESNO, CITY OF FRESNO, DESCRIBED AS FOLLOWS:

PARCEL J AS SHOWN ON PARCEL MAP NO. 2006-43 FILED IN THE OFFICE OF THE FRESNO COUNTY RECORDER ON AUGUST 8, 2008, IN BOO 68, OF PARCEL MAPS, AT PAGES 92 AND 93, RECORDS OF SAID COUNTY.

APN: 438-220-10

SETBACKS

BUILDING	FRONT: 15', INTERIOR SIDE: 10' (PER FIRE CODE), ALLEY: 0'
PARKING	15' FROM BACK OF SW OR CURB, 20' FROM R/W ON CEDAR
OPEN SPACE	2.0 FAR

EASEMENT SCHEDULE

(A) EXISTING 10' PUBLIC UTILITY EASEMENT PER PM 2006-43, RECORDED ON AUGUST 8, 2008 IN BK. 68, PGS. 92 AND 93, OF PARCEL MAPS.

(B) EXISTING PRIVATE WATER MAIN EASEMENT OFFERED FOR DEDICATION PER DOC. NO. 2008-0071395, O.R.F.C.

CP1

APPL. NO. P25-01774 EXHIBIT A DATE 07/25/2025

LEONELA
PW, LAND PLANNING SECTION
REVISIONS REQUIRED
Leonel.Arvizu@fresno.gov
2025.08.18 11:36:57-07'00'

CITY OF FRESNO DARM DEPT

BASIS OF BEARING

THE WEST LINE OF THE NORTHWEST QUARTER OF SECTION 24, T. 13 S., R. 20 E., M.D.B.& M., PER PARCEL MAP NO. 2006-43, FILED IN BOOK 68 OF PARCEL MAPS, AT PAGES 92-93, F.C.R., TAKEN AS NORTH 0°45'17" EAST.

BENCHMARK

ELEVATIONS HAVE BEEN COMPUTED FROM CITY OF FRESNO TBM 365, DESCRIBED AS A CHISELED SQUARE ON CURB, ON THE WEST SIDE OF CEDAR AVENUE, 130' SOUTH OF SOUTH HAMPTON WAY.

ELEVATION = 324.679'

CAUTION – NOTICE TO CONTRACTOR

1. ALL UTILITY LOCATIONS SHOWN ARE BASED ON MAPS PROVIDED BY THE APPROPRIATE UTILITY COMPANY AND FIELD SURFACE EVIDENCE AT THE TIME OF SURVEY AND IS TO BE CONSIDERED AN APPROXIMATE LOCATION ONLY. IT IS THE CONTRACTOR'S RESPONSIBILITY TO FIELD VERIFY THE LOCATION OF ALL UTILITIES, PUBLIC OR PRIVATE, WHETHER SHOWN ON THE PLANS OR NOT, PRIOR TO CONSTRUCTION. REPORT ANY DISCREPANCIESTO THE ENGINEER PRIOR TO CONSTRUCTION.
2. WHERE A PROPOSED UTILITY CROSSES AN EXISTING UTILITY, IT IS THE CONTRACTOR'S RESPONSIBILITY TO FIELD VERIFY THE HORIZONTAL AND VERTICAL LOCATION OF SUCH EXISTING UTILITY, EITHER THROUGH POTHOLING OR ALTERNATIVE METHOD. REPORT INFORMATION TO THE ENGINEER PRIOR TO CONSTRUCTION.

811 Know what's below. Call before you dig.

REZONE APP. NO. P25-XXXXX
CUP NO. P25-XXXXX

Galloway
575 E Locust Avenue, Suite 103
Fresno, CA 93720
559.721.5030
GallowayUS.com

REGISTERED PROFESSIONAL ENGINEER TERRA J. MORTENSEN 07/24/2025 NO. 75614 CIVIL STATE OF CALIFORNIA

COPYRIGHT
THESE PLANS ARE AN INSTRUMENT OF SERVICE AND ARE THE PROPERTY OF GALLOWAY, AND MAY NOT BE DUPLICATED, DISCLOSED, OR REPRODUCED WITHOUT THE WRITTEN CONSENT OF GALLOWAY. COPYRIGHTS AND INFRINGEMENTS WILL BE ENFORCED AND PROSECUTED.

GRANITE PARK PACE FACILITY
STOCK FIVE DEVELOPMENT, INC

SEC CEDAR AVENUE & HAMPTON WAY
FRESNO, CA 93726

#	Date	Issue / Description	Init.

Project No:	SBD0000010.20
Drawn By:	BMC
Checked By:	JR
Date:	07/18/25

SITE PLAN

C1.0

CITY OF FRESNO
DEVELOPMENT AND IMPACT FEE ESTIMATE

The following estimates are based on preliminary conceptual information. The exact fee obligation will be computed at the time of development by Public Works Department, Land Division & Engineering. The fee rates in effect at the time of building permit issuance, as determined by the Master Fee Schedule, shall apply.

Proposed Development: Granite Park PACE Center - 4092 N. Cedar Avenue

A.P.N. 438-220-01, 08, 09, 10

Planned Land Use: Employment - Office

Current Zoning: O

Site Area: +/- 0.71 acres

Building Area: +/- 17,880 sq. ft.

Entitlement: P25-01774

Estimate Date: August 7, 2025

WATER CONNECTION CHARGES

	Service Area	Quantity	Units	Fee Rate	Amount Due	Notes
Water Meter Charge	2"	1	EA.	$530.00	$530.00	[1] [6]
Irrigation Meter Charge	2"	1	EA.	$530.00	$530.00	[1] [6]
Frontage Charge		360	L.F.	$6.50	***previously satisifed***	
Water Capacity Fee	2"	0.50	EA.	$14,171.33	$7,085.67	[1] [6]
Water Capacity Fee	2" irr.	0.50	EA.	$14,171.33	$7,085.67	[1] [6]
	Total Water Connection Charges				**$15,231.33**	**[1]**

SEWER CONNECTION CHARGES

	Service Area	Quantity	Units	Fee Rate	Amount Due	Notes
House Branch Sewer Charge		[2]	EA	$0.00	[2]	[2]
Lateral Sewer Charge		40,900	Sq.Ft.	$0.10	***previously satisifed***	
Oversized Sewer Charge		40,900	Sq.Ft.	$0.05	***previously satisifed***	
Wastewater Facilities Charge		STEP		[3]	[3]	[4] [7]
	Total Sewer Connection Charges				**$0.00**	**[3]**

CITYWIDE/REGIONAL IMPACT FEES

	Service Area	Quantity	Units	Fee Rate	Amount Due	Notes
Citywide Fire Facilities Impact Fee	Comm. Office	17,880	Sq.Ft.	$686.32	$12,271.40	[7]
Citywide Police Facilities Impact Fee	Comm. Office	17,880	Sq.Ft.	$841.94	$15,053.89	[7]
Citywide Regional Street Charge	Comm. Office	0.71	AC	$16,476.69	$11,698.45	[6]
New Growth Area Major Street Charge	Comm. Office	0.71	AC	$47,073.83	***n/a***	
Traffic Signal Mitigation Impact Fee	Medical Office	17,880	Sq.Ft.	$2,802.14	$50,102.26	[6]
	Total Citywide/Regional Impact Fees				**$89,126.00**	

Total Fees and Charges	***$104,357.33***

CITY OF FRESNO
DEVELOPMENT AND IMPACT FEE ESTIMATE

NOTES:

Within the City of Fresno's sphere of influence there are other sewer and water utility providers. If the project is within one of those districts, the developer must provide confirmation from the representitive Districts that all conditions for sewer and/or water connections and services have been satisfied, prior to issuance of a Building Permit.

Outside agencies developer impact fees: It is the developer's responsibility to contact those agencies for their fee estimates. These agencies include but are not limited to; Fresno County, Council of Fresno County Governments (FCOG), Fresno Metropolitan Flood Control District (FMFCD), various School Districts that serve the City of Fresno, etc.

NOTICE OF 90-DAY PROTEST PERIOD (GOVERNMENT CODE §66020(d)(1))
A protest filed pursuant to subdivision and/or development (a) shall be filed at the time of approval or conditional approval of the development or within 90 days after the date of the imposition of the fees, dedications, reservations, or other exactions to be imposed on a development project. Each local agency shall provide to the project applicant a notice in writing at the time of the approval of the project or at the time of the imposition of the fees, dedications, reservations, or other exactions, a statement of the amount of the fees or a description of the dedications, reservations, or other exactions, and notification that the 90-day approval period in which the applicant may protest has begun.

- The Board of Directors of the Fresno County Regional Transportation Mitigation Fee Agency approved Resolution No. 2009-01 requiring the payment of Regional Transportation Mitigation Fee. The effective date of this resolution is January 1, 2010. Please contact the Council of Fresno County Governments (FCOG) at (559) 233-4148 to determine this fee obligation. Confirmation by the FCOG is required before the City of Fresno can issue the Certificate of Occupancy.

- On December 8, 2016, Fresno City Council adopted Resolution No. 2016-258, effective July 1, 2018, administratively updating the impact fees adjusted by this resolution annually to the percentage change in the 20-City Construction Cost Index as reported in the Engineering News Record (ENR) for the 12-month period ending of May of the year of adjustment.

- Payment of Fresno Metropolitan Flood Control District (FMFCD) impact fees may be required. Please contact FMFCD at (559) 456-3292 to determine fee obligation.

- Payment of applicable school district fees is required prior to issuance of Building Permit. Please contact the respective school district to satisfy your fee obligation. Confirmation by the respective school district is required before the City of Fresno can issue building permits

[1] Fees for Water Service Connections and/or Meters, and Water Capacity due at time of development. Charges based on service and/or meter sizes, (Rates as established by the Master Fee Schedule), determined by the Developer.

[2] Sewer House branches to be installed by Developer at the Developer's cost.

[3] Upon occupancy of the project, the subdivider shall pay the appropriate sewer facility charge pursuant to the Simple Tiered Equity Program (STEP) as determined by the City of Fresno Department of Finance, Utilities Billing & Collection Division (559-621-6765).

[4] The Wastewater Facilities Charge (WWFC) is applicable to single family, duplex, and triplex developments. (FMC 6-302(i)); For Condominium conversions, WWFC may stay in the S.T.E.P. if the project continues to be master metered for water. If the condominiums are individually metered, the developer will pay the pro-rated portion of these fees.

[5] The Trunk Sewer Charge is applicable to single family, duplex, and triplex developments. (FMC 6-302(i)); For Condominium conversions, Trunk Sewer Charges may stay in the S.T.E.P. if the project continues to be master metered for water. If the condominiums are individually metered, the developer will pay the pro-rated portion of these fees.

[6] Due at Building Permit

[7] Due with Certificate of Occupancy

[8] Construction Fee Credits may be applicable. Contact the Public Works Engineering Services Division at (559) 621-8685 for more information.

[9] Parks fee applicable only to residential developments

[10] Fee not applicable on replacement or reconstruction of an existing structure that has been destroyed or demolished provided that the Building Permit for new construction is obtained within one year after the building is destroyed or demolished, and there is no change in the land use designation. (Res. Nos. 2005-428, 429)

[11] Subject to the acceptance date of the vesting tentative map, fee may not be applicable until 2-years after the date of Final Map recordation; when applicable, fee is due at Building Permit for all un-developed lots at the fee rate then in effect.

Prepared and Reviewed By: Frank Saburit Date: August 7, 2025 (559) 621-8797

City of Fresno Public Works Department
Land Division & Engineering