1. TWO WORKING DAYS BEFORE COMMENCING EXCAVATION OPERATIONS WITHIN THE STREET RIGHT-OF-WAY AND/OR UTILITY EASEMENTS, ALL EXISTING UNDERGROUND FACILITIES SHALL HAVE BEEN LOCATED BY UNDERGROUND SERVICES ALERT (USA) CALL 1-800-642-2444.
2. REPAIR ALL DAMAGED AND/OR OFF-GRADE CONCRETE STREET IMPROVEMENTS AS DETERMINED BY THE CONSTRUCTION MANAGEMENT ENGINEER PRIOR TO OCCUPANCY.
3. ANY SURVEY MONUMENTS WITHIN THE AREA OF CONSTRUCTION SHALL BE PRESERVED OR RESET BY A PERSON LICENSED TO PRACTICE LAND SURVEYING IN THE STATE OF CALIFORNIA.
4. ANY UTILITIES REQUIRING RELOCATION SHALL BE THE RESPONSIBILITY AND AT THE EXPENSE OF THE DEVELOPER. FIRE HYDRANTS WILL BE RELOCATED BY CITY FORCES, DEVELOPER IS RESPONSIBLE TO NOTIFY CITY WATER DIVISION AT 621-5300 TO ARRANGE AND COORDINATE WORK.
5. DESIGNATED ("HIGHLIGHTED") CURBS WILL BE PAINTED WITH 3" WHITE LETTERS STATING "FIRE LANE "NO PARKING" EVERY 50 FEET. PROVIDE SIGN(S) (17"X22" MIN) AT ALL PUBLIC ENTRANCE DRIVES TO PROPERTY "WARNING-VEHICLES STOPPED, PARKED, OR LEFT STANDING IN FIRE LANES WILL BE IMMEDIATELY REMOVED AT OWNER'S EXPENSE-22658_CALIFORNIA VEHICLE CODE-FRESNO POLICE DEPARTMENT 498-1414". ALL GATES ON COMMON ACCESS DRIVES SHALL BE EQUIPPED WITH APPROVED POLICE/FIRE BYPASS LOCKS (BEST LOCKS; PADLOCK 21B700 SERIES OR CYLINDER LOCK 1W782). GATES/FENCES SHALL NOT OBSTRUCT THE MINIMUM WIDTH REQUIRED FOR FIRE LANES. EMERGENCY ACCESSES ARE REQ'D TO BE DEDICATED FIRE PROTECTION EASEMENTS. ROAD SURFACES SHALL BE OF A ALL WEATHER CONSTRUCTION.
6. ALL CONSTRUCTION WORK ON THIS PROJECT IS SUBJECT TO INTERRUPTION IF THE ROAD SYSTEM BECOMES IMPASSIBLE FOR FIRE APPARATUS DUE TO RAIN OR OTHER OBSTACLES.
7. OPEN CUT IS NOT PERMITTED. ALL UTILITY CONNECTIONS MUST BE BORED.
8. CONTACT SOLID WASTE DIVISION FOR APPOINTMENT TO ESTABLISH ACCESS AND IMPROVEMENTS REQUIRED AS CONDITIONS OF PROVIDING DISPOSAL SERVICE.
9. A BACKFLOW PREVENTION DEVICE IS REQUIRED. CONTACT WATER DIVISION FOR REQUIREMENTS; DEVICES MUST BE INSTALLED ON-SITE IN A LOCATION APPROVED BY THE CROSS CONNECTION CONTROL OFFICER; A PLUMBING PERMIT IS REQUIRED TO INSTALL DEVICE; BACKFLOW PREVENTION DEVICES REQUIRED SHALL BE INSTALLED AT THE DEVELOPER'S EXPENSE BY A QUALIFIED JOURNEYMAN PLUMBER CERTIFIED AS COMPETENT FOR SUCH PURPOSES BY THE WATER SYSTEMS MANAGER; BACKFLOW DEVICES MUST BE TESTED AND ACCEPTED BY THE WATER DIVISION A MINIMUM OF 5 DAYS PRIOR TO REQUEST FOR A FINAL BUILDING INSPECTION. THE BACKFLOW DEVICE SHALL BE SCREENED BY LANDSCAPING OR SUCH OTHER MEANS AS MAY BE APPROVED.
10. NO EXPOSED UTILITY BOXES, TRANSFORMERS, METERS, PIPING, (EXCEPTING THE BACKFLOW PREVENTION DEVICE) ETC. ARE ALLOWED TO BE LOCATED IN THE LANDSCAPE AREAS OR SETBACKS ON THE STREET FRONTAGES OF THE BUILDINGS. ALL TRANSFORMERS ETC. SHALL BE SHOWN ON THE SITE PLAN.
11. TREES SHALL BE MAINTAINED IN GOOD HEALTH. TREES MAY NOT BE TRIMMED OR PRUNED TO REDUCE THE NATURAL HEIGHT OR OVERALL CROWN OF THE TREE, EXCEPT AS NECESSARY FOR THE HEALTH OF THE TREE AND PUBLIC SAFETY OR AS MAY OTHERWISE BE APPROVED BY THE DEVELOPMENT DEPARTMENT.
12. LANDSCAPING MUST BE IN PLACE BEFORE ISSUANCE OF THE CERTIFICATE OF OCCUPANCY.
13. PRIOR TO FINAL INSPECTION, A WRITTEN CERTIFICATION, SIGNED BY A LANDSCAPE PROFESSIONAL, APPROVED BY THE DIRECTOR, SHALL BE SUBMITTED STATING THAT THE REQUIRED LANDSCAPING AND IRRIGATION WAS INSTALLED IN ACCORDANCE WITH THE LANDSCAPING AND IRRIGATION PLANS APPROVED BY THE PLANNING DIVISION, DEVELOPMENT DEPARTMENT.
14. THE AMOUNT OF LIGHT SHALL BE PROVIDED ACCORDING TO THE STANDARDS OF THE DEPARTMENT OF PUBLIC WORKS. WHERE PROVIDED TO ILLUMINATE PARKING, SALES OR DISPLAY AREAS SHALL BE HOODED AND SO ARRANGED AND CONTROLLED SO AS NOT TO CAUSE A NUISANCE EITHER TO HIGHWAY TRAFFIC OR THE LIVING ENVIRONMENT. THE SPECIFICATIONS AND TYPES OF LIGHTING FIXTURES TO BE INSTALLED ON THE SITE SHALL BE SUBMITTED AND APPROVED BY THE PLANNING DEPARTMENT PRIOR TO ISSUANCE OF THE BUILDING PERMITS.
- SIGNS, OTHER THAN DIRECTIONAL SIGNS, IF APPLICABLE ARE NOT APPROVED FOR INSTALLATION AS PART OF THIS SPECIAL PERMIT. SUBMIT FOR SEPARATE MASTER SIGN PROGRAM OR SIGN REVIEW APPLICATION.
- APPLICATIONS AND REQUIREMENTS ARE AVAILABLE AT THE PLANNING DIVISION'S PUBLIC FRONT COUNTER.
- PROVIDE ORIENTATION MAPS AT ALL DRIVEWAY ENTRANCES TO THE SITE.
15. WINDOW SIGNS ARE LIMITED TO 4 SQUARE FEET IN AREA, PROVIDING INFORMATION ABOUT HOURS OF OPERATION AND EMERGENCY, SALE OR RENTAL INFORMATION ONLY EXTERIOR SIGNAGE SUCH AS BANNERS, FLAGS, AND PENNANTS ARE PROHIBITED. HOWEVER, A SPECIAL EVENT BANNER SIGN ANNOUNCING GRAND OPENINGS, NEW MANAGEMENT, ETC. ARE PERMITTED FOR 30 DAYS IF APPROVED BY THE DEVELOPENT DIRECTOR, ATTACHED TO THE BUILDING AND NOT EXCEEDING 32 SQUARE FEET IN AREA.
16. ALL HANDICAPPED PARKING STALLS SHALL BE PLACED ADJACENT TO FACILITY ACCESS RAMPS OR IN STRATEGIC AREAS WHERE THE HANDICAPPED SHALL NOT HAVE TO WHEEL OR WALK BEHIND PARKING VEHICLES WHILE TRAVELING TO OR FROM HANDICAPPED PARKING STALLS AND RAMPS.
17. ROOF MOUNTED AND DETACHED MECHANICAL EQUIPMENT FOR COMMERCIAL AND OFFICE USES SHALL BE SCREENED FROM VIEW AND ACOUSTICALLY BAFFLED TO PREVENT THE NOISE LEVEL RATING FOR THE EQUIPMENT FROM EXCEEDING 55 LDN MEASURED AT THE PROPERTY LINE.
18. FIRE HYDRANTS SHALL BE TESTED, PAINTED, NUMBERED AND APPROVED AND ALL SURFACES ACCESS ROADS SHALL BE INSTALLED AND MADE SERVICEABLE PRIOR TO AND DURING CONSTRUCTION.
19. TWO MEANS OF INGRESS/EGRESS MUST BE MAINTAINED DURING ALL PHASES OF DEVELOPMENT.
20. DEED(S) OF EASEMENTS(S) FOR THE REQUIRED DEDICATIONS SHALL BE PREPARED BY THE OWNER/DEVELOPER'S ENGINEER AND SUBMITTED TO THE CITY WITH VERIFICATION OF OWNERSHIP PRIOR TO ISSUANCE OF BUILDING PERMITS.
21. CONTACT P.W. TRAFFIC ENGINEER @ 621-8800 10 WORKING DAYS PRIOR TO ANY OFF-SITE CONCRETE CONSTRUCTION.
22. UNDERGROUND ALL EXISTING OFFSITE OVERHEAD UTILITIES WITHIN THE LIMITS OF THIS APPLICATION AS PER FMC SECTION 12-011, 8-801 AND RES. NO. 78-522/88-229.
23. SIGNING AND STRIPING PLANS SHALL BE DONE BY THE DEVELOPER, SAID PLANS SHALL BE DONE PER THE CURRENT CALTRANS STANDARDS AND SHALL BE SUBMITTED AS PART OF THE STREET PLANS FOR THIS ENTITLEMENT TO PUBLIC WORK FOR REVIEW AND APPROVAL BY THE PUBLIC WORKS DEPARTMENT/ENGINEERING SERVICES.
24. PARKING LOT GEOMETRIES TO BE DESIGNED PER THE CITY OF FRESNO PARKING MANUAL.
25. MODIFY OR REPLACE EXISTING RAMPS TO MEET CURRENT PUBLIC WORKS STANDARDS, AS DETERMINED BY THE CONSTRUCTION MANAGEMENT ENGINEER PRIOR TO OCCUPANCY. "DETECTABLE WARNING DEVICES" ARE REQUIRED IF NOT EXISTING. REF: PW STD DWG P-28, P-86 AND P-87.
26. WALKWAYS SHALL HAVE CHANGES IN LEVELS NO GREATER THAN 1/2"VERTICAL UNLESS BEVELED WITH A SLOPE OF 1(VERT.) IN 2(HORIZ.) OR MAX 5% SLOPE.
27. SUBMIT ENGINEERED STREET CONSTRUCTION PLANS TO THE PUBLIC WORKS DEPARTMENT.
28. SUBMIT STREET LIGHTING PLANS TO THE PUBLIC WORKS DEPARTMENT, TRAFFIC ENGINEERING.
29. ALL IMPROVEMENTS SHALL BE CONSTRUCTED IN ACCORDANCE WITH THE STANDARD SPECIFICATIONS OF THE CITY OF FRESNO PUBLIC WORKS DEPARTMENT OR STREET CONSTRUCTION PLANS AS REQUIRED AND APPROVED BY THE CITY ENGINEER. THE PERFORMANCE OF ANY WORK WITHIN THE PUBLIC STREET RIGHT-OF-WAY (INCLUDING PEDESTRIAN AND PUBLIC UTILITY EASEMENTS) REQUIRES A STREET WORK PERMIT PRIOR TO COMMENCEMENT OF WORK. ALL REQUIRED STREET IMPROVEMENTS MUST BE COMPLETED AND ACCEPTED BY THE CITY PRIOR TO OCCUPANCY.
30. THE REQUIRED 4' MINIMUM PATH OF TRAVEL SHALL BE PROVIDED ALONG THE PUBLIC SIDEWALK DIRECTLY IN FRONT OF PROPERTY, AS REQUIRED BY THE CALIFORNIA ADMINISTRATION CODE (TITLE 24). A PEDESTRIAN EASEMENT MAY BE REQUIRED IF REQUIREMENTS ARE NOT MET.
31. ALL REQUIRED FIRE ACCESS LANES SHALL BE PROVIDED AND MAINTAINED WITH AN APPROVED "ALL WEATHER" SURFACE CAPABLE OF SUPPORTING 80,000 LB. VEHICLES (MMINIMUM 4" OF BASE ROCK OVER COMPACTED OR UNDISTURBED NATIVE SOIL OR PER APPROVED ENGINEERED PLANS) YEAR-ROUND AND WITH 24 FEET MINIMUM WIDTH OR OTHER APPROVED METHOD THAT WOULD PREVENT SHOULDER DEGRADATION.
32. PROVIDE A COVENANT FOR SHARED FIRE FIGHTING ACCESS AND WATER SUPPLY.
33. TURNS IN PRIVATE DRIVES FOR FIRE APPARATUS ACCESS SHALL HAVE A MIMIMUM 44 FOOT CENTERLINE TURN RADIUS.
34. ALL EXISTING DRIVEWAY APPROACHES WHICH NO LONGER PROVIDE ACCESS TO APPROVED VEHICLE PARKING AREAS SHALL BE REMOVED UNLESS OTHERWISE APPROVED BY THE CITY ENGINEER. SUCH AREAS SHALL BE RECONSTRUCTED WITH CURB, GUTTER AND SIDEWALK TO MATCH EXISTING ADJACENT STREET IMPROVEMENTS. THIS WORK SHALL BE COMPLETED AND ACCEPTED BEFORE A PERMIT OF OCCUPANCY IS ISSUED OR THE BUILDING IS OCCUPIED. AUTHORITY FMC 11-209.
35. A FEASIBILITY STUDY FOR ALL PROPOSED VACATIONS OF EXISTING RIGHTS OF WAY IS REQUIRED TO BE COMPLETED PRIOR TO BUILDING PERMITS.
36. SUBMIT A SEPARATE MASTER SIGN PROGRAM OR SIGN REVIEW APPLICATION. APPLICATION AND REQUIREMENTS FOR SUBMITTAL ARE AVAILABLE AT THE PLANNING DIVISION'S PUBLIC FRONT COUNTER.
37. ALL FUTURE PROPOSED FENCES, HEDGES AND WALLS, ETC. SHALL BE REVIEWED AND APPROVED BY THE CITY OF FRESNO, PLANNING AND DEVELOPMENT DEPARTMENT PRIOR TO INSTALLATION.
38. ALL HANDICAPPED STALLS SHALL BE LOCATED TO ALLOW THE SHORTEST PATH OF TRAVEL TO THE BUILDING ENTRANCE. THE STALLS SHALL BE MARKED WITH THE INTERNATIONAL SYMBOL OF SPACES AND A WARNING THAT VEHICLES IN VIOLATON OF SECTION 10-1017 OF THE MUNICIPAL CODE SHALL BE TOWED AWAY. THE INTERNATIONAL SYMBOL AND TOW-AWAY WARNING SHALL BE POSTED CONSPICUOUSLY ON SEVEN-FOOT POLES.

GENERAL NOTES | 6

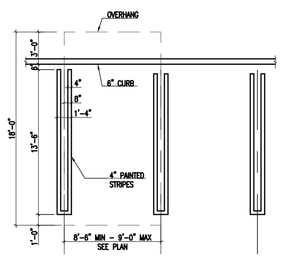

(COMPACT STALLS USE 8'-6" X 15'-6")

TYPICAL PARKING STALLS | 1/8"=1'-0" | 5

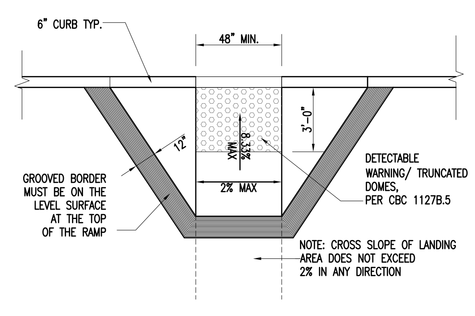

TYPICAL CURB RAMP | 1/4"=1'-0" | 4

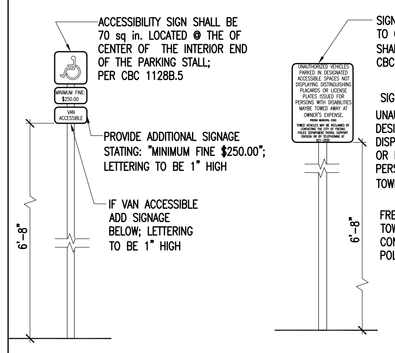

ACCESSIBLE SIGNAGE | 1/2"=1'-0" | 3

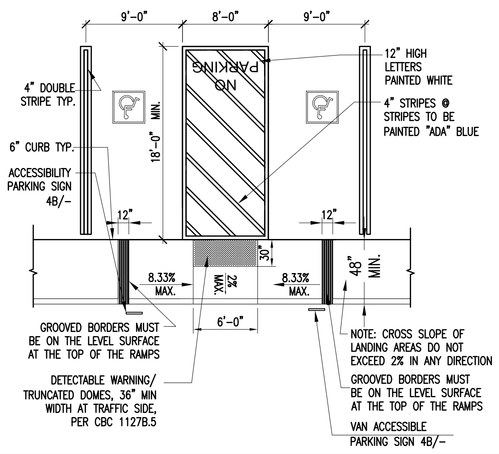

ACCESSIBLE PARKING STALLS | 1/8"=1'-0" | 2

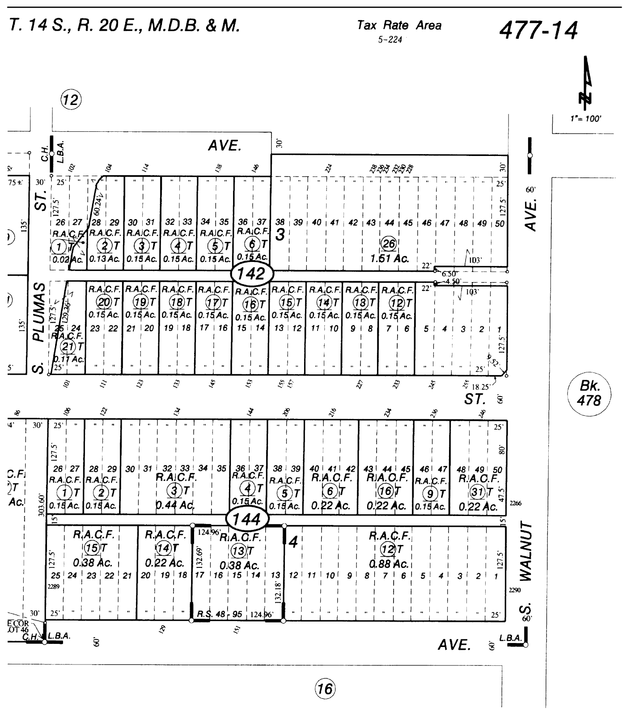

PARCEL MAP | NTS | 7

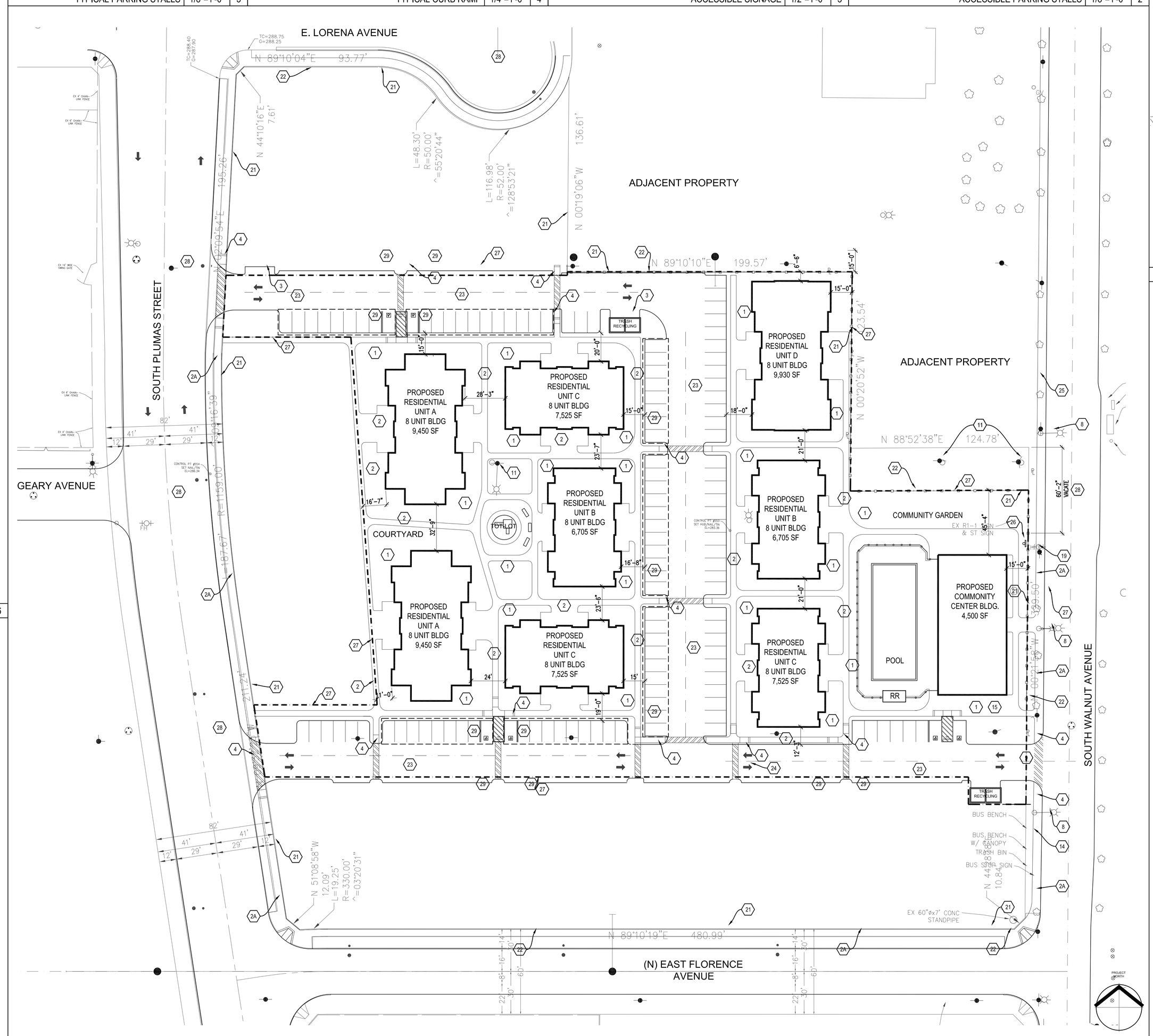

SITE PLAN | 1/32"=1'-0" | 1

VICINITY MAP

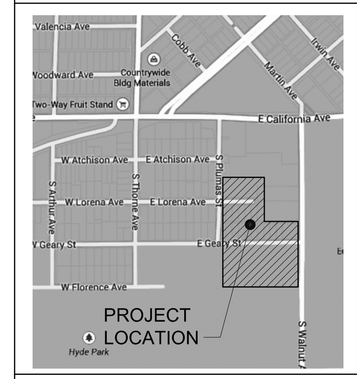

LEGEND

- (N) FIRE DEPARTMENT CONNECTION
- (E) FIRE HYDRANT
- (N) FIRE HYDRANT
- (E) TRAFFIC/STREET LIGHT
- (N) TRAFFIC/STREET LIGHT
- (E) ELECTRIC/STEET/TRAFFIC BOX OR VAULT(SEE KEY NOTES)
- (N) LIGHTING
- (N) FENCE
- SECTION LINE
- (N) PROPERTY/PARCEL LINE
- PHASE LINE
- BUILDING OUTLINE
- PATH OF TRAVEL (4'-0" MIN. WIDTH)
- PAVEMENT TREATMENT AT PEDESTRIAN CROSSING
- E1 EASEMENT (SEE PARCEL MAP) E1 = 10' X 49.75' E2 = 2.5' X 125'
- STREET VACATION
- (E) TREE
- T (N) SITE TRANSFORMER

KEY NOTES

1. PROPOSED LANDSCAPE AREA
2. PROPOSED WALKWAY
2A. PROPOSED SIDEWALK AS PER PW STD P-5. (OFFSITE WORK TO BE PLANNED & CONTRUCTED BY OTHERS, R.D.A.)
3. PROPOSED TRASH AND RECYCLE ENCLOSURE PER CITY STANDARDS
4. PROPOSED ADA RAMP PER PW STD P-30, OFFSITE WORK TO BE PLANNED & CONTRUCTED BY OTHERS, R.D.A.
5. PROPOSED 48" HIGH WROUGHT IRON FENCE W/GATES
6. (E)SIDEWALK AND CURBS TO BE REMOVED
7. (N) STREET LIGHT TYP.
8. (E)STREET LIGHT TO REMAIN
9. DRIVEWAY APPROACH PER PW STD P-2 & P-4. PROVIDE 10 FEET OF RED CURBING (3 COATS) ON BOTH SIDE OF DRIVE OFFSITE WORK TO BE PLANNED & CONTRUCTED BY OTHERS, R.D.A.
10. (E) ELECTRIC BOX/VAULT TO REMAIN
11. (E) POWER POLE
12. CURB AND GUTTER PER PW STD P-5.OFFSITE WORK TO BE PLANNED & CONTRUCTED BY OTHERS, R.D.A.
13. ADA PARKING PER STATE & FEDERAL REQUIREMENTS
14. EXISTING BUS BENCH
15. BIKE RACKS
16. SECTION LINE
17. CENTER LINE
18. FIRE LANE ACCESS (44' RADIUS MIN.) PAINT CURB RED
19. (E) FIRE HYDRANT
21. (N) FENCE; MAX. 42" HIGH
22. PROPOSED PROPERTY LINE
23. CONSTRUCT PARKING LOT TO PW STD. P-41, P-42 & P-43.
24. PAINTED DIRECTIONAL ARROW.
25. (E) SIDEWALK AND CURB AND PARKWAYS TO REMAIN
26. (E) STOP SIGN
27. PHASE LINE OF WORK
28. EXISTING STREET TO BE VACATED
29. OPEN CARPORT

PHASE 1 AREA CALCULATION

RESIDENTIAL TOTAL

8 BUILDINGS:
64,815 SF TOTAL
64 TOTAL UNITS
8 ONE-BEDROOM UNITS
32 TWO-BEDROOM UNITS
20 THREE-BEDROOM UNITS
4 FOUR BEDROOM UNITS

COMMUNITY CENTER

4,500 SF COMMUNITY CENTER
TOTAL BUILDING AREA: 134,130 SF

SITE AREA

PHASE 1 = 156,300 SF (3.60 ACRES)
64 UNITS = 17.8 UNITS/ACRE
121 PARKING STALLS =
APPX 1.9 PER UNIT
(64 CARPORTS)

SCOTT BECK ARCHITECT
10125 WASHINGTON BOULEVARD, SUITE 100 CULVER CITY, CA 90232 (310) 945-4925

SITE PLAN - PHASE 1

FRESNO EDISON APARTMENTS

2250 WALNUT AVE., FRESNO, CA 93706

© 2014, SCOTT BECK ARCHITECT

DRAWN BY: SSB
PHASE:
SCALE: AS NOTED
DATE: 01-28-2015
JOB NUMBER: 2006.009.04

A-1.1A

Plot Date: Feb 17, 2015 - 11:55am - SBeck