ID 24-1609
12/5/2024

DESIGN-BUILD CONTRACT
AMENDMENT NO. 1

THIS CONTRACT AMENDMENT NO. 1 is made and entered into by and between the CITY OF FRESNO, a California municipal corporation (City), and Integrated Community Development, a Limited Liability Company (Design-Builder), as follows:

RECITALS

WHEREAS, Council approved the Phase 1 Design Contract on July 20, 2023, for specified Design-Build Design phase services, including all sub-consultant, subcontractor, and reimbursable costs for the Senior Activity Center at 4343 North Blackstone Avenue (Project); and

WHEREAS, the City now desires to execute Phase 2 of the Design-Build Contract for construction of the Project; and

WHEREAS, the selected design build team is composed of Design/Builder and its sub-consultants including architect and engineers from [name], shall provide Phase 2 construction services and hereby represents that it desires to and is professionally and legally capable of performing the services called for by this Agreement; and

WHEREAS, this Agreement will be administered for the City by its Capital Projects Department Director (Director) or designee.

AGREEMENT

NOW THEREFORE, the parties agree that the Agreement be amended as follows:

1. Contract Documents. The "Progressive Design Build Agreement" in its entirety, as modified, for all services related to the Project, copies of which are annexed hereto as part **Exhibit 1**, together with all the documents specifically referred to in said annexed documents are hereby incorporated into and made a part of this Contract and shall be known as the Contract Documents.

2. Price. For the monetary consideration of $30,536,376 as set forth in **Exhibit 1**, Design-Builder has substantially performed Phase 1 (design and preconstruction activities) and promises and agrees to perform or cause to be performed, in a good and workmanlike manner, and to the satisfaction of the City, and in strict accordance with the Specifications, all of the work as set forth in the Contract Documents.

3. Payment. The City accepts the Design-Builder's Proposal as stated and agrees to pay the consideration stated, at the times, in the amounts, and under the conditions specified in the Contract Documents. The Design-Builder agrees to accept electronic payment from the City.

4. Scope of Services. Design-Builder shall perform the services described herein and in **Exhibit 1** to complete the Project more fully described in **Exhibit 1**, and this shall include all work incidental to, or necessary to perform, such services even though not specifically described in **Exhibit 1**. By entry into this Agreement and upon City's issuance of a written "Notice to Proceed for Phase 2 work," City contracts for the services in Phase Two for construction services.

The DBIA Design Build Agreement (Agreement), as modified, contains additional terms and conditions related to this Contract. In the event of a conflict between this Contract and the Agreement, this Contract shall take precedence. However, if this Contract does not address a legal issue for this Project, the parties shall be governed by the provisions of the Agreement.

IN WITNESS WHEREOF, the parties have executed this Contract on the day and year here below written, of which the date of execution by the City shall be subsequent to that of the Design-Builder's, and this Contract shall be binding and effective upon execution by both parties.

[SIGNATURES FOLLOW ON THE NEXT PAGE]

CITY OF FRESNO,
A California municipal corporation

By: _____
Nicholas D. Mascia, PE
Interim Capital Projects Director

Dated: 12/09/2024

APPROVED AS TO FORM:
ANDREW JANZ
City Attorney

By: _____ 11/25/24
Brandon M. Collet Date
Chief Assistant City Attorney

ATTEST:
TODD STERMER, CMC
City Clerk

By: _____ 12-10-2024
Susan Mac Date
Deputy

Integrated Community Development,
A Limited Liability Company

By: _____

Name: Benjamin T. Lingo

Title: Managing Member
(If corporation or LLC., Board Chair, Pres. or Vice Pres.)

By: _____

Name: Charles Brumbaugh

Title: Managing Member
(If corporation or LLC., CFO, Treasurer, Secretary or Assistant Secretary)

REVIEWED BY:

_____
MIKE MOONEYHAM
LICENSED PROFESSIONAL ENGINEER
CITY OF FRESNO

Addresses:
CITY:
City of Fresno
Attention: Mike Mooneyham
Licensed Professional Engineer
747 R Street
Fresno, CA 93721
Phone: (559) 621-8623
Email: mike.mooneyham@fresno.gov

DESIGN-BUILDER:
Integrated Community Development
Attention: Jake Lingo, Senior Vice President
20750 Ventura Boulevard, Suite 155
Woodland Hills, CA 91364
Phone: (818) 974-2966
Email: jakelingo@icdmail.com

Attachment:
Exhibit 1 – Contract Documents including Scope of Services

DESIGN BUILD CONTRACT
AMENDMENT NO. 1

EXHIBIT NO. 1

Exhibit B – Contract Price Amendment
Exhibit C – Guaranteed Maximum Price Proposal
Exhibit D – Labor Rates (provided at contract execution)

EXHIBIT B

CONTRACT PRICE AMENDMENT

SENIOR ACTIVITY CENTER

PHASE TWO – CONSTRUCTION SERVICES

This Exhibit B Contract Price Amendment incorporates the Design-Builder's Proposal (Proposal) for completion of design and construction (Phase Two Construction Services) on the Senior Activity Center (Project) and is, by this reference, made a part of the Contract Documents to the same extent as if set forth herein in full.

Amendments and clarifications to the DBIA 544, Exhibit 1, as included in the Contract executed July 20, 2023, between the Owner and Design-Builder are as follows:

Article 6 – Contract Time

6.2.1 *Delete and Replace with:*

Completion of the entire Work, as defined in the General Conditions of the Contract, shall be achieved no later than 683 consecutive calendar days after the Notice to Proceed (NTP) for Phase Two Construction Services, which will be issued upon Building Permit Issuance.

6.2.2 *Delete and Replace with:*

Interim milestones and/or Substantial Completion of identified portions of the Work shall be achieved as stated in the Design-Builders Proposal.

Furthermore, the Owner and Design-Builder shall meet at the site and walk the job to inspect the work performed is in conformance with the approved plans and pursuant to the following schedule:

1. Upon completion of second story floor joists.
2. Upon completion of second floor ceiling joists.
3. Upon completion of first floor box out.
4. Upon completion of second floor box out.
5. Upon substantial completion of rough and prior to installation of insulation.
6. Upon completion of hanging drywall.
7. Prior to commencement of interior paint.
8. Upon substantial completion and prior to start of finish punch list work.
9. Completion walkthrough.

Owner shall designate individual(s) responsible for walk through with authority to make decisions on behalf of Owner. Owner shall provide written acknowledgement of walk through with any discrepancy to the plans noted and / or any desired changes within three business days of walk through.

6.4 *Delete and Replace with:*

Liquidated Damages: Design-Builder understands that if Substantial Completion is not attained by the Scheduled Completion Date, Owner will suffer damages which are difficult to determine and accurately specify. Design-Builder agrees that if Substantial Completion is not attained as specified

in Section 6.2.1 herein, Design-Builder shall pay the Owner the amount of $1,000 for each Calendar Day after the scheduled Completion Date that Completion is not attained.

Article 7 – Contract Price

7.1.2 *Delete and Replace with:*

For Phase 2 Services, Owner shall pay Design-Builder in accordance with Article 6 of the General Conditions of Contract a contract price ("Contract Price") equal to the Guaranteed Maximum Price established in Section 7.6 herein and any adjustments made in accordance with the General Conditions of Contract.

7.1.3 *Delete:* NOT USED

7.2 *Delete:* NOT USED

7.6.1 *Delete and Replace with:*

Design-Builder guarantees that it shall not exceed the Guaranteed Maximum Price (GMP) of THIRTY MILLION, FOURTEEN THOUSAND, TWO-HUNDRED AND EIGHT Dollars ($30,014,208.00) for Phase 2 Services. Documents used as a basis for the GMP shall be identified in the Design-Builder's Proposal, herein. Design-Builder does not guarantee any specific line item provided as part of the GMP and has the sole discretion to apply payment due to overruns in one line item to savings due to underruns in any other line item. Design-Builder agrees, however, that it will be responsible for paying all costs of completing the Work which exceed the GMP, as may be adjusted in accordance with the Contract Documents.

7.6.2 *Delete and Replace with:*

The GMP includes a Contingency in the amount stated in the Design-Builder's Proposal which is available for Design-Builder's exclusive use for unanticipated costs it has incurred that are not the basis for a Change Order under the Contract Documents. The Design-Builder may not use the Contingency for costs relating to correction of defective, damaged, or nonconforming Work performed by the Design-Builder or its Subcontractors or costs related to design errors or omissions performed by the Design-Builder or its Subconsultants. By way of example, and not as a limitation, such costs may include: (a) trade buy-out differentials; (b) overtime or acceleration; (c) escalation of materials; (d) Subcontractor defaults; or (e) those events under Section 8.2.2 of the General Conditions of Contract that result in an extension of the Contract Time but do not result in an increase in the Contract Price. The Contingency is not available to Owner for any reason, including changes in scope or any other item which would enable Design-Builder to increase the GMP under the Contract Documents. Design-Builder shall provide Owner notice of all anticipated charges against the Contingency and shall provide Owner as part of the monthly status report required by Section 2.1.2 of the General Conditions of Contract an accounting of the Contingency, including all reasonably foreseen uses or potential uses of the Contingency in the upcoming three (3) months. Design-Builder agrees that with respect to any expenditure from the Contingency relating to a Subcontractor default or an event for which insurance or bond may provide reimbursement, Design-Builder will in good faith exercise reasonable steps to obtain performance from the Subcontractor and/or recovery from any surety or insurance company. Design-Builder agrees that if Design-Builder is subsequently reimbursed for said costs, then said recovery will be credited back to the Contingency.

Article 10 – Representatives of the Parties

10.1.1 *Delete*:

Scott Mozier, PE
Public Works Director
2600 Fresno Street
Fresno, CA 93721

and Replace with:

Nicholas D. Mascia, PE
Interim Capital Projects Director
747 R Street
Fresno, CA 93721

EXHIBIT C

GUARANTEED MAXIMUM PRICE PROPOSAL

SENIOR ACTIVITY CENTER

PHASE TWO – CONSTRUCTION SERVICES

Integrated
Community Development

PROPOSAL

Date: November 25, 2024
Project: Fresno Senior Activity Center
Location: 4343 North Blackstone Avenue

Description: Deliver Construction Drawings and obtain all permits to build an approximate 34,172 square foot Senior Activity Center as shown in Exhibit B. Perform all construction associated with approved plans and deliver to the City of Fresno with a Certificate of Occupancy.

Guaranteed Maximum Price (GMP): $30,536,376
Please see attached Budget.

Assumptions:

- No major import or export of fill material.
- No solar installation. Building will be delivered solar ready.
- No battery room required.

Allowances:

- Import / Export Soils: $100,000. Civil engineer is still assessing import of soil. $100,000 based on experience and current knowledge of the site.
- Site Fire Hydrant Allowance: $50,000. Based on amount of lineal footage proposed in the Design Drawings by the civil engineer. Final design to be determined by the local fire department requirements.
- Street Grind, Cap & Striping: $100,000. Final off-site plans not yet available. $100,000 based on experience and current knowledge of the site.
- Appliances: $250,000. Custom kitchen will need to be specified by the city during the Construction Drawings. $250,000 is based off similar size commercial kitchen with standard equipment.
- IT Allowance: $250,000. Based on a typical budget for a building of this size. Until final specs are provided by the city, we cannot guarantee a price due to the variability of the price of IT equipment.
- Sound / Entertainment Allowance: $250,000. Based on a typical budget for a building of this size. Until final specs are provided by the city, we cannot guarantee a price due to the variability of price on sound and entertainment equipment.
- Special Equipment (Pool, Kitchen, Lockers): $250,000. Based on a typical budget for a building of this size. These are specialty items that must be bid out by specialty vendors.
- Monument Signage: $20,000. Based on a basic monument sign. If the City wants something large or decorative, the price will increase.

- Pool 80'x40'x4': $1,000,000. Based on conversations with various swimming pool contractors.
- Security: $290,000. Based on current rates and proposed construction timeline.
- Payment and Completion Bond: $481,810. Based on current rates.
- Insurance: $375,000. Based on current rates.
- Survey: $30,000. Based on experience and expected survey needs.
- Field Testing / Inspections: $50,000 Based on experience and expected testing and inspections.

Please see attached exhibits in support of this Proposal:

- Exhibit A: Proposed Budget
- Exhibit B: Current Design Drawings which is basis for the Budget / GMP.
- Exhibit C: Proposed Construction schedule.

This proposal is valid until December 12th, 2024. After that time Integrated Community Development may require modification of the terms or cost of this proposal.

Integrated Community Development can commence the work upon approval of the GMP Contract by the City of Fresno. If you have any questions or comments about the information presented in this Proposal, please do not hesitate to call me at (818) 974-2966.

Thank you for the opportunity to bid on the proposed Fresno Senior Activity Center. We look forward to working with you to bring this project to the community.

Sincerely,

Jake Lingo
Senior Vice President

Exhibit A

CONTINUATION SHEET

AIA Document G 702, APPLICATION AND CERTIFICATE FOR PAYMENT, containing Contractor's signed Certification is attached.

APPLICATION NUMBER: 1

APPLICATION DATE: 1/1/00

PERIOD TO: 1/0/00

In tabulation below, amounts are stated to the nearest dollar.
Use column I on Contracts where variable retainage for line items may apply.

ITEM NO.	DESCRIPTION OF WORK	A BUDGET	B CONTRACT CHANGES: PREVIOUSLY APPROVED CONTRACT CHANGES	C CONTRACT CHANGES: CURRENT CONTRACT CHANGES	D ADJUSTED CONTRACT TOTALS (A)+(B)+(C)	E RETENTION %	F PREVIOUS REQUESTS: NET AMOUNT PAID	G PREVIOUS REQUESTS: (-) RETENTION AMOUNT	H CURRENT REQUEST: GROSS AMOUNT REQUESTED	I CURRENT REQUEST: LESS RETENTION	J NET AMOUNT REQUESTED (H)-(I)	TOTA TO
ON-SITE (1000)												
1025	Asbestos Removal		0.00	0.00	0.00	0%	0.00	0.00	0.00	0.00	0.00	
1050	Demo utilities		0.00	0.00	0.00	0%	0.00	0.00	0.00	0.00	0.00	
1075	Clearing/Grubbing	40,000.00	0.00	0.00	40,000.00	0%	0.00	0.00	0.00	0.00	0.00	
1100	Import/Export Soils	100,000.00	0.00	0.00	100,000.00	10%	0.00	0.00	0.00	0.00	0.00	
1125	grading for streets, walks, curbs,	40,000.00	0.00	0.00	40,000.00	10%	0.00	0.00	0.00	0.00	0.00	
1150	Rough Grading for buildings	250,000.00	0.00	0.00	250,000.00	10%	0.00	0.00	0.00	0.00	0.00	
1175	Finish Grading for buildings	160,000.00	0.00	0.00	160,000.00	10%	0.00	0.00	0.00	0.00	0.00	
1200	Fine Grading for buildings	120,000.00	0.00	0.00	120,000.00	10%	0.00	0.00	0.00	0.00	0.00	
1225	Erosion Control	120,000.00	0.00	0.00	120,000.00	10%	0.00	0.00	0.00	0.00	0.00	
1250	Retaining Wall Backfill		0.00	0.00	0.00	10%	0.00	0.00	0.00	0.00	0.00	
1275	Parking Garage Backfill		0.00	0.00	0.00	10%	0.00	0.00	0.00	0.00	0.00	
1300	Sewer Distribution	190,000.00	0.00	0.00	190,000.00	10%	0.00	0.00	0.00	0.00	0.00	
1325	Water Distribution	80,000.00	0.00	0.00	80,000.00	10%	0.00	0.00	0.00	0.00	0.00	
1350	Fire Protection Main Line	90,000.00	0.00	0.00	90,000.00	10%	0.00	0.00	0.00	0.00	0.00	
1375	Site Fire Hydrant Allowance	50,000.00	0.00	0.00	50,000.00	10%	0.00	0.00	0.00	0.00	0.00	
1400	Elect Vaults & Distribution	80,000.00	0.00	0.00	80,000.00	10%	0.00	0.00	0.00	0.00	0.00	
1425	Light Standards & Distribution	240,000.00	0.00	0.00	240,000.00	10%	0.00	0.00	0.00	0.00	0.00	
1450	Cable Vaults & Distribution	45,000.00	0.00	0.00	45,000.00	10%	0.00	0.00	0.00	0.00	0.00	
1475	Telephone Vaults & Distribution	45,000.00	0.00	0.00	45,000.00	10%	0.00	0.00	0.00	0.00	0.00	
1500	Site Storm Drains	185,000.00	0.00	0.00	185,000.00	10%	0.00	0.00	0.00	0.00	0.00	
1525	Site Area Drains & Gutter Tie-Ins	100,000.00	0.00	0.00	100,000.00	10%	0.00	0.00	0.00	0.00	0.00	
1550	Flatwork	330,000.00	0.00	0.00	330,000.00	10%	0.00	0.00	0.00	0.00	0.00	
	Upgrade to Stamped Concrete on Path (~6,000sq.f	0.00		0.00	0.00				0.00			
1555	Carports - 100	500,000.00	0.00	0.00	500,000.00	10%	0.00	0.00	0.00	0.00	0.00	
1575	Parking Lot Curb & V Gutter	160,000.00	0.00	0.00	160,000.00	10%	0.00	0.00	0.00	0.00	0.00	
1600	Parking Pavement Asphalt	320,000.00	0.00	0.00	320,000.00	10%	0.00	0.00	0.00	0.00	0.00	
1625	Parking Lot Striping	45,000.00	0.00	0.00	45,000.00	10%	0.00	0.00	0.00	0.00	0.00	
1630	Trash Enclosures	60,000.00	0.00	0.00	60,000.00	10%	0.00	0.00	0.00	0.00	0.00	
1650	Site Walls and Raised Planters	65,000.00	0.00	0.00	65,000.00	10%	0.00	0.00	0.00	0.00	0.00	
1675	Wrought Iron Fencing	$220,000.00	0.00	0.00	220,000.00	10%	0.00	0.00	0.00	0.00	0.00	
1700	Wrought Iron Gates	$60,000.00	0.00	0.00	60,000.00	10%	0.00	0.00	0.00	0.00	0.00	
1725	Gate Motors	$90,000.00	0.00	0.00	90,000.00	10%	0.00	0.00	0.00	0.00	0.00	
1750	Metal Fencing	$10,000.00	0.00	0.00	10,000.00	10%	0.00	0.00	0.00	0.00	0.00	
1800	Streets/ Access	90,000.00	0.00	0.00	90,000.00	10%	0.00	0.00	0.00	0.00	0.00	
	TOTAL ON-SITE	3,885,000.00	0.00	0.00	3,885,000.00							
OFF-SITES (2000)												
2025	Sewer Connection	$50,000.00	0.00	0.00	50,000.00	10%	0.00	0.00	0.00	0.00	0.00	

ITEM NO.	DESCRIPTION OF WORK	A BUDGET	B CONTRACT CHANGES PREVIOUSLY APPROVED CONTRACT CHANGES	C CONTRACT CHANGES CURRENT CONTRACT CHANGES	D ADJUSTED CONTRACT TOTALS (A)+(B)+(C)	E RETENTION %	F PREVIOUS REQUESTS NET AMOUNT PAID	G (-) RETENTION AMOUNT	H CURRENT REQUEST GROSS AMOUNT REQUESTED	I LESS RETENTION	J NET AMOUNT REQUESTED (H)-(I)	TOTA TO
2050	Fire Hyrdant Connection	$45,000.00	0.00	0.00	45,000.00	10%	0.00	0.00	0.00	0.00	0.00	
2075	Fire Protection Connection	$45,000.00	0.00	0.00	45,000.00	10%	0.00	0.00	0.00	0.00	0.00	
2100	Domestic Water Connection	$45,000.00	0.00	0.00	45,000.00	10%	0.00	0.00	0.00	0.00	0.00	
2125	Electrical Connection	$50,000.00	0.00	0.00	50,000.00	10%	0.00	0.00	0.00	0.00	0.00	
2150	Telephone Connection	$15,000.00	0.00	0.00	15,000.00	10%	0.00	0.00	0.00	0.00	0.00	
2175	Cable Connection	$15,000.00	0.00	0.00	15,000.00	10%	0.00	0.00	0.00	0.00	0.00	
2200	Gas Connection	$55,000.00	0.00	0.00	55,000.00	10%	0.00	0.00	0.00	0.00	0.00	
2225	Asphalt Patch & Street Work	$80,000.00	0.00	0.00	80,000.00	10%	0.00	0.00	0.00	0.00	0.00	
2250	Concrete Curbs & Gutters & Sidewalks	$85,000.00	0.00	0.00	85,000.00	10%	0.00	0.00	0.00	0.00	0.00	
2275	Storm Drain	$60,000.00	0.00	0.00	60,000.00	10%	0.00	0.00	0.00	0.00	0.00	
2280	Storm Drain Structures	$30,000.00	0.00	0.00	30,000.00	10%	0.00	0.00	0.00	0.00	0.00	
2300	Street grind & cap & Striping	$100,000.00	0.00	0.00	100,000.00	10%	0.00	0.00	0.00	0.00	0.00	
2325	Traffic Control	$80,000.00	0.00	0.00	80,000.00	10%	0.00	0.00	0.00	0.00	0.00	
2350	Traffic Loop & other	$0.00	0.00	0.00	0.00	10%	0.00	0.00	0.00	0.00	0.00	
2900	Allowance		0.00	0.00	0.00	0%	0.00	0.00	0.00	0.00	0.00	
	Blank Form #1 - Off Site		0.00	0.00	0.00	10%	0.00	0.00	0.00	0.00	0.00	
	Blank Form #2 - Off Site		0.00	0.00	0.00	0%	0.00	0.00	0.00	0.00	0.00	
	TOTAL OFF-SITE	755,000.00	0.00	0.00	755,000.00							
BASE CONSTRUCTION (3000)												
3025	Survey, site water, drainage & Trash		0.00	0.00	0.00	10%	0.00	0.00	0.00	0.00	0.00	
3050	Temporary Fencing & Power		0.00	0.00	0.00	#REF!	0.00	0.00	0.00	0.00	0.00	
3075	Dust Control		0.00	0.00	0.00	10%	0.00	0.00	0.00	0.00	0.00	
3100	Parking Garage Footings & Walls & Columns		0.00	0.00	0.00	10%	0.00	0.00	0.00	0.00	0.00	
3125	Parking Garage Shoring		0.00	0.00	0.00	10%	0.00	0.00	0.00	0.00	0.00	
3150	Parking Garage Slabs		0.00	0.00	0.00	10%	0.00	0.00	0.00	0.00	0.00	
3175	Parking Garage Topping Slab		0.00	0.00	0.00	10%	0.00	0.00	0.00	0.00	0.00	
3200	Topping Slab Waterproofing		0.00	0.00	0.00	10%	0.00	0.00	0.00	0.00	0.00	
3225	below grade waterproofing		0.00	0.00	0.00	10%	0.00	0.00	0.00	0.00	0.00	
3250	Foundations	600,000.00	0.00	0.00	600,000.00	10%	0.00	0.00	0.00	0.00	0.00	
3275	Structural Steel	$800,000.00	0.00	0.00	800,000.00	10%	0.00	0.00	0.00	0.00	0.00	
3300	Elevator Beams	$10,000.00	0.00	0.00	10,000.00	10%	0.00	0.00	0.00	0.00	0.00	
3325	Elevators	$90,000.00	0.00	0.00	90,000.00	10%	0.00	0.00	0.00	0.00	0.00	
3350	Plumbing	$1,050,000.00	0.00	0.00	1,050,000.00	10%	0.00	0.00	0.00	0.00	0.00	
3375	Bathtubs		0.00	0.00	0.00	10%	0.00	0.00	0.00	0.00	0.00	
3400	Bath Countertops	$30,000.00	0.00	0.00	30,000.00	10%	0.00	0.00	0.00	0.00	0.00	
3425	Electrical	$1,300,000.00	0.00	0.00	1,300,000.00	10%	0.00	0.00	0.00	0.00	0.00	
3450	Fire Alarm	$140,000.00	0.00	0.00	140,000.00	10%	0.00	0.00	0.00	0.00	0.00	
3475	Rough Carpentry (Materials)+Trusses	$725,000.00	0.00	0.00	725,000.00	0%	0.00	0.00	0.00	0.00	0.00	
3500	Rough Carpentry (Labor)	$1,450,000.00	0.00	0.00	1,450,000.00	10%	0.00	0.00	0.00	0.00	0.00	
3525	Janitorial Const. & Final	$60,000.00	0.00	0.00	60,000.00	10%	0.00	0.00	0.00	0.00	0.00	
3550	Sheet Metal	$85,000.00	0.00	0.00	85,000.00	10%	0.00	0.00	0.00	0.00	0.00	
3575	Waterproofing Decks And Landings	$95,000.00	0.00	0.00	95,000.00	10%	0.00	0.00	0.00	0.00	0.00	
3600	Nail on Glass & Sliding Glass Doors	$225,000.00	0.00	0.00	225,000.00	0%	0.00	0.00	0.00	0.00	0.00	
3625	Nail on Glass Install	$100,000.00	0.00	0.00	100,000.00	10%	0.00	0.00	0.00	0.00	0.00	

ITEM NO.	DESCRIPTION OF WORK	A BUDGET	B CONTRACT CHANGES PREVIOUSLY APPROVED CONTRACT CHANGES	C CONTRACT CHANGES CURRENT CONTRACT CHANGES	D ADJUSTED CONTRACT TOTALS (A)+(B)+(C)	E RETENTION %	F PREVIOUS REQUESTS NET AMOUNT PAID	G PREVIOUS REQUESTS (-) RETENTION AMOUNT	H CURRENT REQUEST GROSS AMOUNT REQUESTED	I CURRENT REQUEST LESS RETENTION	J NET AMOUNT REQUESTED (H)-(I)	TOTA T(
3650	Sliding Glass Door Install	$30,000.00	0.00	0.00	30,000.00	10%	0.00	0.00	0.00	0.00	0.00	
3675	Store fronts	$600,000.00	0.00	0.00	600,000.00	10%	0.00	0.00	0.00	0.00	0.00	
3700	Unit Entry & Interior Doors	$150,000.00	0.00	0.00	150,000.00	10%	0.00	0.00	0.00	0.00	0.00	
3725	H.M. doors	$60,000.00	0.00	0.00	60,000.00	10%	0.00	0.00	0.00	0.00	0.00	
3750	Garage Doors	$30,000.00	0.00	0.00	30,000.00	10%	0.00	0.00	0.00	0.00	0.00	
3775	Rated Access Doors	$35,000.00	0.00	0.00	35,000.00	10%	0.00	0.00	0.00	0.00	0.00	
3800	Roof Hatches & Skylights	$0.00	0.00	0.00	0.00	10%	0.00	0.00	0.00	0.00	0.00	
3825	Roof ladders	$0.00	0.00	0.00	0.00	10%	0.00	0.00	0.00	0.00	0.00	
3850	Precast concrete stairs		0.00	0.00	0.00	10%	0.00	0.00	0.00	0.00	0.00	
3875	Metal Handrails and Railings	$90,000.00	0.00	0.00	90,000.00	10%	0.00	0.00	0.00	0.00	0.00	
3900	Roofing	$300,000.00	0.00	0.00	300,000.00	10%	0.00	0.00	0.00	0.00	0.00	
3925	HVAC	$1,300,000.00	0.00	0.00	1,300,000.00	10%	0.00	0.00	0.00	0.00	0.00	
3950	emergency call system	$40,000.00	0.00	0.00	40,000.00	10%	0.00	0.00	0.00	0.00	0.00	
3975	fire protection	$250,000.00	0.00	0.00	250,000.00	10%	0.00	0.00	0.00	0.00	0.00	
4000	trash chutes		0.00	0.00	0.00	10%	0.00	0.00	0.00	0.00	0.00	
4025	Call Boxes	$25,000.00	0.00	0.00	25,000.00	10%	0.00	0.00	0.00	0.00	0.00	
4050	Security System	$50,000.00	0.00	0.00	50,000.00	10%	0.00	0.00	0.00	0.00	0.00	
4075	Mailboxes	$1,000.00	0.00	0.00	1,000.00	10%	0.00	0.00	0.00	0.00	0.00	
4100	Fire Extinguishers	$2,000.00	0.00	0.00	2,000.00	10%	0.00	0.00	0.00	0.00	0.00	
4125	Knox Boxes & Locks	$3,000.00	0.00	0.00	3,000.00	10%	0.00	0.00	0.00	0.00	0.00	
4150	Fire Proofing	$30,000.00	0.00	0.00	30,000.00	10%	0.00	0.00	0.00	0.00	0.00	
4170	Scaffolding	$150,000.00	0.00	0.00	150,000.00	0%	0.00	0.00	0.00	0.00	0.00	
4175	Lath & Plaster	$600,000.00	0.00	0.00	600,000.00	10%	0.00	0.00	0.00	0.00	0.00	
4185	Wood Siding & outriggers	$50,000.00	0.00	0.00	50,000.00	10%	0.00	0.00	0.00	0.00	0.00	
4200	Building Insulation	$120,000.00	0.00	0.00	120,000.00	10%	0.00	0.00	0.00	0.00	0.00	
4225	Steel Studs	$10,000.00	0.00	0.00	10,000.00	10%	0.00	0.00	0.00	0.00	0.00	
4250	Gypsum Board	$850,000.00	0.00	0.00	850,000.00	10%	0.00	0.00	0.00	0.00	0.00	
4275	Gypsum Board (Clean-up)		0.00	0.00	0.00	10%	0.00	0.00	0.00	0.00	0.00	
4300	Lightweight Concrete Underlayment	$60,000.00	0.00	0.00	60,000.00	10%	0.00	0.00	0.00	0.00	0.00	
4325	Finish Carpentry	$220,000.00	0.00	0.00	220,000.00	10%	0.00	0.00	0.00	0.00	0.00	
4350	Painting (Interior)	$190,000.00	0.00	0.00	190,000.00	10%	0.00	0.00	0.00	0.00	0.00	
4375	Painting (exterior)	$110,000.00	0.00	0.00	110,000.00	10%	0.00	0.00	0.00	0.00	0.00	
4400	Cabinets (National Contract)	$140,000.00	0.00	0.00	140,000.00	10%	0.00	0.00	0.00	0.00	0.00	
4425	Countertops	$40,000.00	0.00	0.00	40,000.00	10%	0.00	0.00	0.00	0.00	0.00	
4450	Floor Covering - Vinyl	$220,000.00	0.00	0.00	220,000.00	10%	0.00	0.00	0.00	0.00	0.00	
4475	Floor Covering - Stone Ceramic	$140,000.00	0.00	0.00	140,000.00	10%	0.00	0.00	0.00	0.00	0.00	
4500	Finish Hardware (National Contract)	$60,000.00	0.00	0.00	60,000.00	10%	0.00	0.00	0.00	0.00	0.00	
4525	Toilet/ Bath Accessories	$100,000.00	0.00	0.00	100,000.00	10%	0.00	0.00	0.00	0.00	0.00	
4550	Bathroom Mirrors	$15,000.00	0.00	0.00	15,000.00	10%	0.00	0.00	0.00	0.00	0.00	
4575	Acoustic Tile	$185,000.00	0.00	0.00	185,000.00	10%	0.00	0.00	0.00	0.00	0.00	
4600	Appliances (Allowance)	$250,000.00	0.00	0.00	250,000.00	10%	0.00	0.00	0.00	0.00	0.00	
4625	Carpet - Material	$125,000.00	0.00	0.00	125,000.00	10%	0.00	0.00	0.00	0.00	0.00	
4650	Carpet - Labor	$175,000.00	0.00	0.00	175,000.00	10%	0.00	0.00	0.00	0.00	0.00	
4675	Carpet - Common Area	$0.00	0.00	0.00	0.00	10%	0.00	0.00	0.00	0.00	0.00	
4700	Window Treatments	$200,000.00	0.00	0.00	200,000.00	10%	0.00	0.00	0.00	0.00	0.00	

ITEM NO.	DESCRIPTION OF WORK	A BUDGET	B CONTRACT CHANGES PREVIOUSLY APPROVED CONTRACT CHANGES	C CONTRACT CHANGES CURRENT CONTRACT CHANGES	D ADJUSTED CONTRACT TOTALS (A)+(B)+(C)	E RETENTION %	F PREVIOUS REQUESTS NET AMOUNT PAID	G PREVIOUS REQUESTS (-) RETENTION AMOUNT	H CURRENT REQUEST GROSS AMOUNT REQUESTED	I CURRENT REQUEST LESS RETENTION	J CURRENT REQUEST NET AMOUNT REQUESTED (H)-(I)	TOTA TO
4725	Awnings	$150,000.00	0.00	0.00	150,000.00	10%	0.00	0.00	0.00	0.00	0.00	
4750	Gutter & Down Spout	$60,000.00	0.00	0.00	60,000.00	10%	0.00	0.00	0.00	0.00	0.00	
4775	Accent Stonework	$100,000.00	0.00	0.00	100,000.00	10%	0.00	0.00	0.00	0.00	0.00	
4800	Final Prep Work	$60,000.00	0.00	0.00	60,000.00	10%	0.00	0.00	0.00	0.00	0.00	
4825	Building Signage	$60,000.00	0.00	0.00	60,000.00	10%	0.00	0.00	0.00	0.00	0.00	
4875	Solar - Includes prewire, conduit, switch gear. Excludes solar panels and batteries.	$50,000.00	0.00	0.00	50,000.00	10%	0.00	0.00	0.00	0.00	0.00	
4900	Contingency		0.00	0.00	0.00	10%	0.00	0.00	0.00	0.00	0.00	
4910	IT allowance	$250,000.00	0.00	0.00	250,000.00	10%	0.00	0.00	0.00	0.00	0.00	
4920	Sound/ Entertainment Allowance	$250,000.00	0.00	0.00	250,000.00	10%	0.00	0.00	0.00	0.00	0.00	
4930	Spec. Equip. (Pool, Kitchen, Lockers, Allowance)	$250,000.00	0.00	0.00	250,000.00	10%	0.00	0.00	0.00	0.00	0.00	
	TOTAL BASE CONSTRUCTION	14,996,000.00	0.00	0.00	14,996,000.00							
EXTERIOR / COMMON AREA (1538)												
5025	Monument Signage (Allowance)	$20,000.00	0.00	0.00	20,000.00	10%	0.00	0.00	0.00	0.00	0.00	
5125	Landscaping & Irrigation	$600,000.00	0.00	0.00	600,000.00	10%	0.00	0.00	0.00	0.00	0.00	
5150	Pool 80' x 40'x 4' allowance	$1,000,000.00	0.00	0.00	1,000,000.00	10%	0.00	0.00	0.00	0.00	0.00	
5175	Outdoor Furniture and Amenities	$200,000.00	0.00	0.00	200,000.00	10%	0.00	0.00	0.00	0.00	0.00	
5200	BBQ Area	$100,000.00	0.00	0.00	100,000.00	10%	0.00	0.00	0.00	0.00	0.00	
5225	Furniture	$350,000.00	0.00	0.00	350,000.00	0%	0.00	0.00	0.00	0.00	0.00	
5250	Courts	$400,000.00	0.00	0.00	400,000.00	10%	0.00	0.00	0.00	0.00	0.00	
	TOTAL EXT. COMMON AREA	$2,670,000.00	$0.00	0.00	2,670,000.00							
	Total Hard Cost	22,306,000.00			22,306,000.00							0.00
Subtotals		$22,306,000										
GENERAL REQUIREMENTS (6000)												
6000	General Conditions	$892,240.00	0.00	0.00	892,240.00	10%	0.00	0.00	0.00	0.00	0.00	
6025	Overhead	$892,240.00	0.00	0.00	892,240.00	10%	0.00	0.00	0.00	0.00	0.00	
	Total Hard Costs	$24,090,480.00			24,090,480.00							
CONTRACTOR'S FEE (7000)												
7000	Security	$290,000.00	0.00	0.00	0.00	10%	0.00	0.00	0.00	0.00	0.00	
7100	Payment and Completion Bond	$481,809.60	0.00	0.00	481,809.60							
7200	Insurance	$375,000.00	0.00	0.00	375,000.00							
7300	Survey	$30,000.00	0.00	0.00	30,000.00							
7400	Field Testing / Inspections	$50,000.00	0.00	0.00	50,000.00							
	TOTAL OTHER COSTS	$1,226,809.60			$936,809.60							
	TOTAL	**25,317,290.00**	**0.00**	**0.00**	**25,317,290.00**		**0.00**	**0.00**	**0.00**	**0.00**	**0.00**	

Allowances are shown in orange

SENIOR CENTER GMP CALCULATION				
A	Direct Cost: Design			
A.1	Design - Architectural	$	277,200	
A.2	Design - Landscape Architect	$	27,250	
A.3	Design - Civil Engineering	$	68,349	
A.4	Design - Structural, MEP & Low Voltage	$	42,250	
A	**Subtotal Direct Cost: Design**	**$**	**415,056**	**A**
B	Direct Cost: Construction			
B.1	(1000) On-Site	$	3,885,000	
B.2	(2000) Off-Site	$	755,000	
B.3	(3000) Base Construction	$	14,346,000	
B.4	(1538) Exterior / Common Area	$	3,320,000	
B	**Subtotal Direct Cost: Construction**	**$**	**22,306,000**	**B**
C	Indirect Costs			
C.1	(6000) General Requirements	$	1,784,480	C.1 = 8% x B
C.2	(7000) Security	$	290,000	fixed
C.3	(7000) Payment and Completion Bond	$	481,810	C.3 = 2% x (B+C.1)
C.4	(7000) Insurance	$	375,000	fixed
C.5	(7000) Survey	$	30,000	fixed
C.6	(7000) Field Testing / Inspection	$	50,000	fixed
C	**Subtotal Indirect Cost**	**$**	**3,011,290**	**C**
D	**Subtotal Direct and Indirect Cost (Not Including Fee)**	**$**	**25,732,346**	**D=A+B+C**
E	Design-Build Fee (8%)	$	2,058,588	E=8% x D
F	Project Contingency (8%)	$	2,223,275	F=8% x (D+E)
G	**Subtotal Direct and Indirect Cost (Including Fee)**	**$**	**30,014,208**	**G=D+E+F**
H	**Guaranteed Maximum Price (GMP)**	**$**	**30,014,208**	**H=G**
I	Owner's Contingency	$	-	
J	Total Contract Price	$	30,014,208	J=H+I
K	Total Prior Contract (Phase I) Invoice To-Date	$	522,168	K
L	Total Amended Contract Price	**$**	**30,536,376**	**L=J+K**
M	**Total Costs**	**$**	**30,536,376**	**M=L**

Exhibit B

FRESNO SENIOR CENTER AND SENIOR AFFORDABLE APARTMENTS

- 34,172 SF SENIOR CENTER + 82 UNIT SENIOR AFFORDABLE HOUSING -

4323 NORTH BLACKSTONE AVE

APN: 426-253-17, 426-253-19

OWNER

NAME: CITY OF FRESNO
CONTACT:

ADDRESS:

PHONE:
FAX:
E-MAIL:

WEB SITE:

DESIGN BUILDER

NAME: INTEGRATED COMMUNITY DEVELOPMENT
CONTACT: JAKE LINGO

ADDRESS: 20750 VENTURA BLVD. SUITE 155
WOODLAND HILLS, CA 91634
PHONE: (818) 905-2430
FAX:
E-MAIL: JLINGO@ICDEMAIL.COM

WEB SITE: WWW.INTEGRATEDCOMMUNITY DEVELOPMENT.COM

PROJECT DESCRIPTION:

THE FRESNO SENIOR CENTER AND ADJACENT SENIOR AFFORDABLE HOUSING PROJECT HAS BEEN DESIGNED TO PROVIDE A COMFORTABLE AND SUPPORTIVE ENVIRONMENT FOR OLDER ADULTS. ONE OF THE MAIN GOALS OF THIS PROJECT IS TO FOSTER AN ACTIVE AND ENGAGED LIFESTYLE FOR SENIORS, WHILE OFFERING VARIOUS SERVICES AND AMENITIES TO MEET THEIR UNIQUE NEEDS.

THE DESIGN OF THE PROJECT IS CONTEMPORARY IN NATURE, UTILIZING A MIX OF MODERN CONSTRUCTION MATERIAL, SUCH AS FIBER CEMENT SIDING AND PANELS, STEEL CANOPIES, AND ALUMINUM FRAMED AND INSULATED STOREFRONT WINDOWS. THE LARGE STOREFRONT WINDOWS LEAD TO TALL INSPIRING OPEN SPACES WITHIN THE INTERIOR THAT PROVIDES A SENSE OF WELL BEING AND A STRONG CONNECTION WITH THE EXTERIOR ENVIRONMENT. IT IS A PROJECT DESIGNED TO INVITE THE COMMUNITY TO PARTICIPATE AND ENGAGE IN THE ACTIVITIES THAT OCCUR WITHIN THE SENIOR CENTER AND TO UTILIZE THE EXPANSIVE 70,000+ SF LANDSCAPED EXTERIOR OUTDOOR OPEN SPACE, PROVIDED FOR USE BY BOTH THE SENIOR CENTER AND SENIOR HOUSING PROJECTS.

THIS PROJECT IS A CONTEMPORARY, STATE OF THE ART, MODERN COMMUNITY CENTER AND HOUSING PROJECT, THAT EMBODIES THE LATEST TRENDS AND INNOVATIONS IN DESIGN, TECHNOLOGY, AND SENIOR LIVING CONCEPTS.

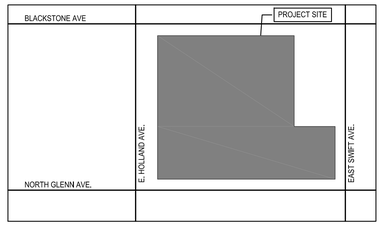

VICINITY MAP
SCALE: N.T.S.

NORTH

PROJECT SUMMARY:

2 STORY SENIOR CENTER +
4 STORY - TYPE V-A SENIOR AFFORDABLE APARTMENT PROJECT

SITE AREA:

SENIOR CENTER SITE AREA =	185,130 SF / 4.25 ACRES
APN:	426-253-17
SENIOR APARTMENT SITE AREA =	54,885 SF / 1.26 ACRES
APN:	426-253-19
TOTAL SITE AREA =	240,015 SF / 5.51 ACRES

ZONING: CMX (CORRIDOR / CENTER MIXED USE)

DENSITY:

ALLOWED:	16 UNITS / ACRE
PROVIDED:	66 UNITS / ACRE

FAR ALLOWED-	**1.5 : 1**
SENIOR CENTER:	
34,172 SF / 185,130 SF SITE =	**.18 : 1**
APARTMENTS:	
68,118 SF / 54,885 SF SITE =	**1.24 : 1**
MAX. HEIGHT:	60'-0"

SETBACKS:

FRONT -	0 - 10 FEET
SIDE -	0
SIDE STREET -	0
REAR -	0
ALLEY -	3 FEET
LANDSCAPE BUFFER ADJ. RS DISTRICT-	15 FEET
PARKING SETBACK FROM BACK OF SIDEWALK OR CURB :	30'-0" MIN.
MIN. FRONTAGE COVERAGE:	70%
CORNER FRONTAGE:	30'-0"

BUILDING FOOTPRINT - % OF EACH SITE:

APARTMENTS	= 17,832 SF	32% OF APARTMENT SITE AREA
SITE AREA	= 54,885 SF	
SENIOR CENTER	= 17,088 SF	9% OF SENIOR CENTER SITE AREA
SITE AREA	= 185,130 SF	

TOTAL BUILDING FOOTPRINT:

APARTMENTS	= 17,832 SF	
SENIOR CENTER	= 17,088 SF	
TOTAL FOOTPRINT	= 34,920 SF	14% OF SITE AREA
TOTAL SITE AREA	= 240,015 SF	

TOTAL PARKING LOT PAVED AREA:

65,511 SF -		27% OF SITE AREA
TOTAL SITE AREA	= 240,015 SF	

TOTAL SIDEWALK PAVED AREA:

25,000 SF -		10% OF SITE AREA
TOTAL SITE AREA	= 240,015 SF	

TOTAL PAVED AREA
90,511 SF **38% OF SITE AREA**

TOTAL LANDSCAPED AREA:
115,172 SF - **48% OF SITE AREA**

MINIMUM ON SITE OPEN SPACE	**10% OF LOT AREA**
10% OF 240,015 SF	= 24,000 SF
OPEN AREA PROVIDED:	
SENOR CENTER	= 100,000 SF
APARTMENTS	= 15,00 SF
TOTAL OPEN AREA PROVIDED	= 115,000 SF

SENIOR CENTER AREA SUMMARY:

1ST FLOOR -	17,088 SF
2ND FLOOR -	14,266 SF
2ND FLOOR DECK -	2,818 SF
TOTAL SENIOR CENTER AREA =	34,172 SF

SENIOR APARTMENT AREA SUMMARY:

1ST FLOOR -	17,832 SF
2ND FLOOR -	16,762 SF
3RD FLOOR -	16,762 SF
4TH FLOOR -	16,762 SF
TOTAL AREA =	68,118 SF

UNIT SUMMARY:

1 BR @ 557 SF	= 73 UNITS
2 BR @ 770 SF	= 9 UNITS
TOTAL UNITS	= 82 UNITS

BALCONY AREA:
82 UNITS X 70 SF PER BALCONY = 5,740 SF

PARKING SUMMARY:
RESIDENTIAL-
REQUIRED PER STATE DENSITY BONUS = 0 SPACES

SENIOR CENTER-
4 SPACES / 1,000 SF

31,354 SF =	126 SPACES
TOTAL PARKING REQUIRED =	126 SPACES

SENIOR APARTMENT
LONG TERM SECURE SPACES:

.5 PER UNIT - 82 UNITS =	41 SPACES
TOTAL PROVIDED =	41 SPACES
TOTAL PARKING SPACES PROVIDED:	173 SPACES

BICYCLE PARKING PROVIDED:
SHORT TERM RESIDENTIAL SPACES
1 PER 15 UNITS = 82 UNITS / 15 = 6 SPACES

POOL EQUIPMENT BUILDING AREA SUMMARY:

1ST FLOOR -	978 SF
TOTAL POOL HOUSE AREA =	978 SF

The above drawings, specifications, ideas, designs and arrangements represented thereby are and shall remain property of the Architect (YM Architects), and no part thereof shall be copied, disclosed to others or used in connection with any other project other than the specific project for which they have been prepared and developed, without the written consent of the Architect (YM Architects). Visual contact with these drawings or specifications shall constitute conclusive evidence of acceptance of these restrictions, Written dimensions on these drawings shall have pre-over scaled dimensions. Contractors shall verify and be responsible for all dimensions and conditions on the job, and this office must be notified of any variations from the dimensions and conditions shown by these drawings. Shop details must be submitted to this office for approval before proceeding with fabrication. 2024 ©

Y&M Architects

Y&M Architects
255 South Santa Fe Avenue, Suite 103
Los Angeles, CA 90012
Telephone: 213 623 2107
www.ymarch.com

FRESNO SENIOR CENTER

Project. *

Integrated Community Development

Developer. **20750 Ventura Boulevard, Suite 155**
Woodland Hills, CA 91364

09.26.24
Date

A-01
Page

P:\2023\FRESNO 3 - KCD01_CAD\00_SHEETS\DD SET\A-01 SENIOR CENTER (COVER SHEET).DWG
9/26/2024 1:19 PM

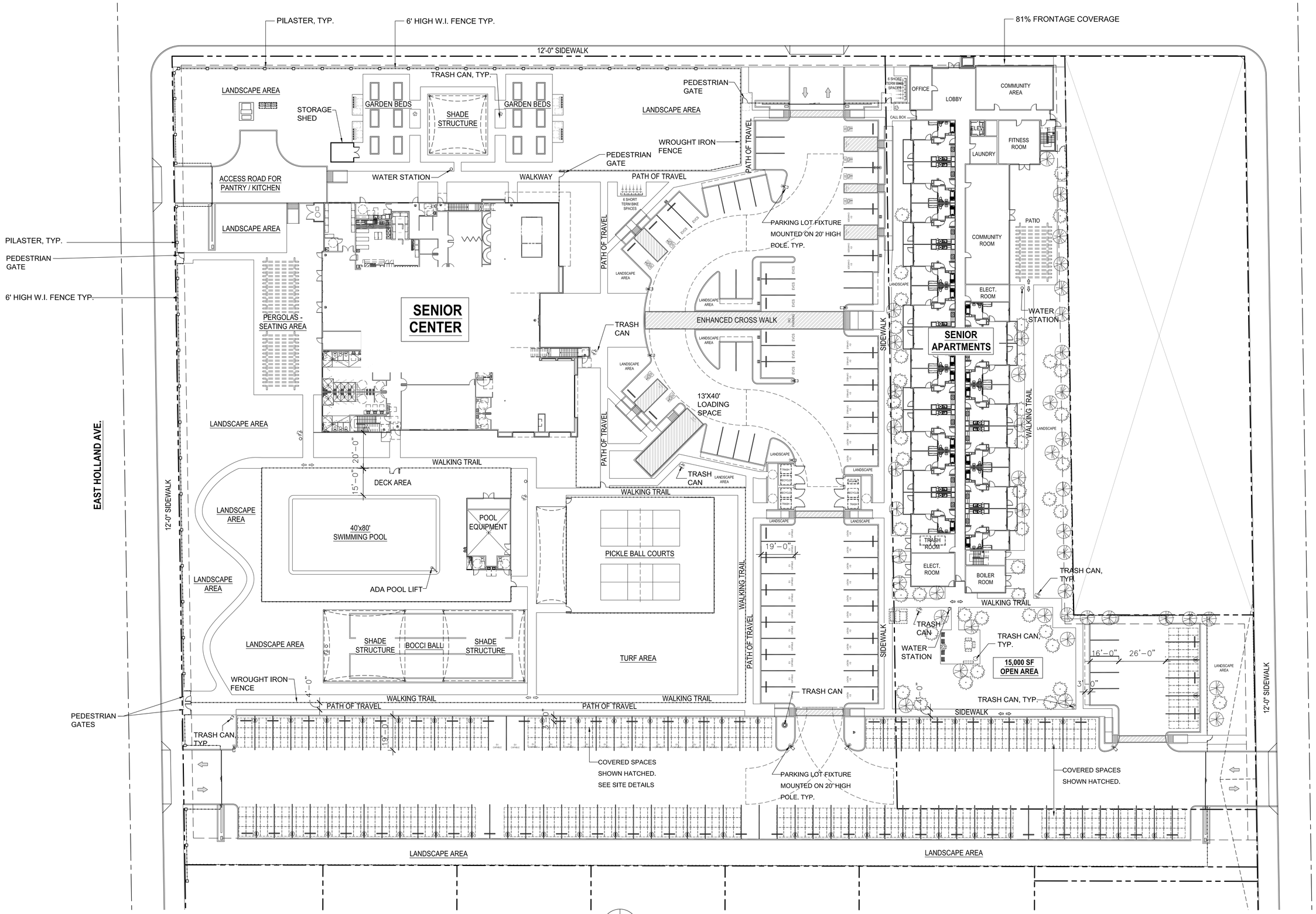

SITE PLAN (1)

SCALE: 1" = 20'-0"

P:\2023\FRESNO 3 - ICD\01_CAD\00_SHEETS\DD SET\A-02 SENIOR CENTER (SITE PLAN).DWG
9/26/2024 1:44 PM

Y&M Architects

Y&M Architects
255 South Santa Fe Avenue, Suite 103
Los Angeles, CA 90012
Telephone: 213 623 2107
www.ymarch.com

FRESNO SENIOR CENTER

Project. *

Integrated Community Development

Developer. 20750 Ventura Boulevard, Suite 155
Woodland Hills, CA 91364

The above drawings, specifications, ideas, designs and arrangements represented thereby are and shall remain property of the Architect (YM Architects), and no part thereof shall be copied, disclosed to others or used in connection with any other project other than the specific project for which they have been prepared and developed, without the written consent of the Architect (YM Architects). Visual contact with these drawings or specifications shall constitute conclusive evidence of acceptance of these restrictions. Written dimensions on these drawings shall have pre-over scaled dimensions. Contractors shall verify and be responsible for all dimensions and conditions on the job, and this office must be notified of any variations from the dimensions and conditions shown by these drawings. Shop details must be submitted to this office for approval before proceeding with fabrication. 2024 ©

09.26.24 — Date

A-02 — Page

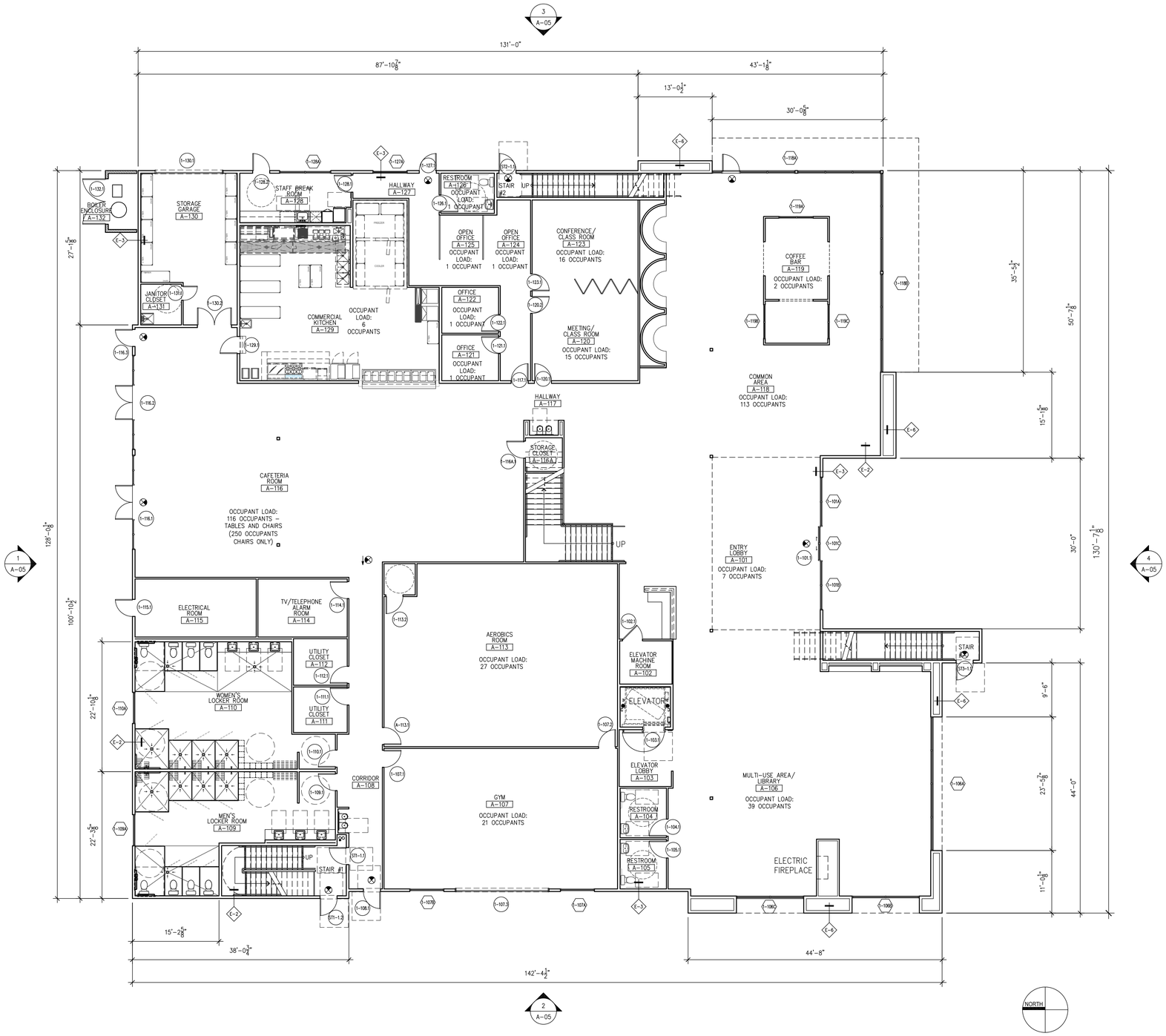

SENIOR CENTER BUILDING:
GROUND LEVEL FLOOR PLAN (1)

SCALE: 1/8" = 1'-0"

P:\2023\FRESNO 3 - HCD\01_CAD\00_SHEETS\D3 SETVA-03 SENIOR CENTER (FIRST FLOOR PLAN).DWG
9/26/2024 1:47 PM

Y&M Architects

Y&M Architects
255 South Santa Fe Avenue, Suite 103
Los Angeles, CA 90012
Telephone: 213 623 2107
www.ymarch.com

FRESNO SENIOR CENTER

Project. *

Integrated Community Development

Developer. 20750 Ventura Boulevard, Suite 155
Woodland Hills, CA 91364

The above drawings, specifications, ideas, designs and arrangements represented thereby are and shall remain property of the Architect (YM Architects), and no part thereof shall be copied, disclosed to others or used in connection with any other project other than the specific project for which they have been prepared and developed, without the written consent of the Architect (YM Architects). Visual contact with these drawings or specifications shall constitute conclusive evidence of acceptance of these restrictions. Written dimensions on these drawings shall have pre-over scaled dimensions. Contractors shall verify and be responsible for all dimensions and conditions on the job, and this office must be notified of any variations from the dimensions and conditions shown by these drawings. Shop details must be submitted to this office for approval before proceeding with fabrication. 2024 ©

09.26.24 — **Date**

A-03 — **Page**

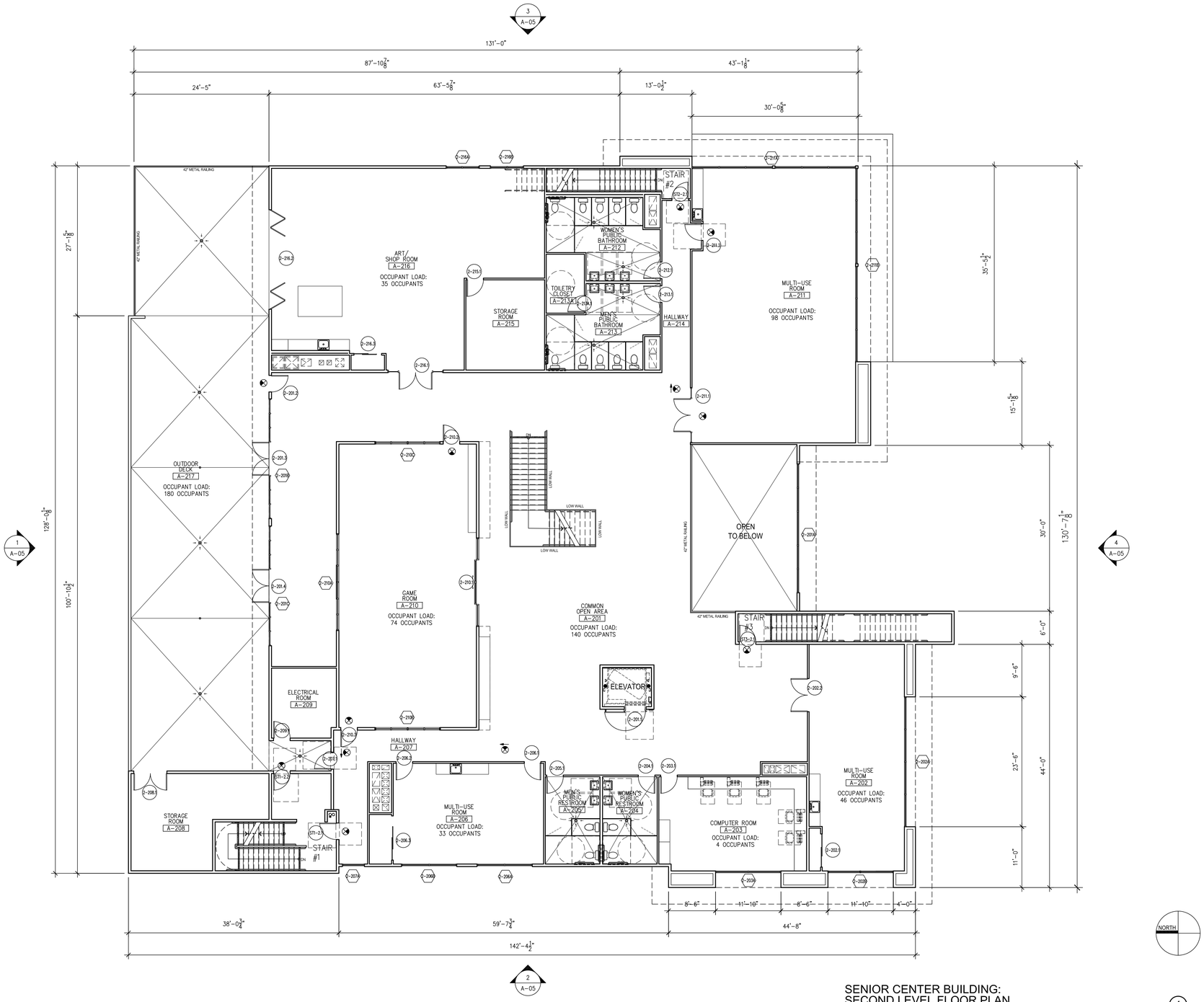

SENIOR CENTER BUILDING:
SECOND LEVEL FLOOR PLAN (1)

SCALE: 1/8" = 1'-0"

The above drawings, specifications, ideas, designs and arrangements represented thereby are and shall remain property of the Architect (YM Architects), and no part thereof shall be copied, disclosed to others or used in connection with any other project other than the specific project for which they have been prepared and developed, without the written consent of the Architect (YM Architects). Visual contact with these drawings or specifications shall constitute conclusive evidence of acceptance of these restrictions. Written dimensions on these drawings shall have pre-over scaled dimensions. Contractors shall verify and be responsible for all dimensions and conditions on the job, and this office must be notified of any variations from the dimensions and conditions shown by these drawings. Shop details must be submitted to this office for approval before proceeding with fabrication. 2024 ©

Y&M Architects
255 South Santa Fe Avenue, Suite 103
Los Angeles, CA 90012
Telephone: 213 623 2107
www.ymarch.com

FRESNO SENIOR CENTER

Project. *

Integrated Community Development

Developer. 20750 Ventura Boulevard, Suite 155
Woodland Hills, CA 91364

09.26.24
Date

A-04
Page

P:\2023\FRESNO 3 - HCD\01_CAD\02_SHEETS\SD SET\A-04 SENIOR CENTER (SECOND FLOOR PLAN).DWG
9/26/2024 1:51 PM

MATERIAL LEGEND:

1 PORTLAND CEMENT PLASTER
COLOR: OMEGA 10

2 PORTLAND CEMENT PLASTER
COLOR: OMEGA 437 ROUGH KHAKI

3 FIBER CEMENT PANEL
COLOR: OMEGA 404 BARN SWALLOW

4 HARDIE BOARD - FIBER CEMENT BOARD
COLOR: DE 6342 BLUE STEEL

5 ALUMINUM STOREFRONT
WINDOWS - BRONZE FRAME

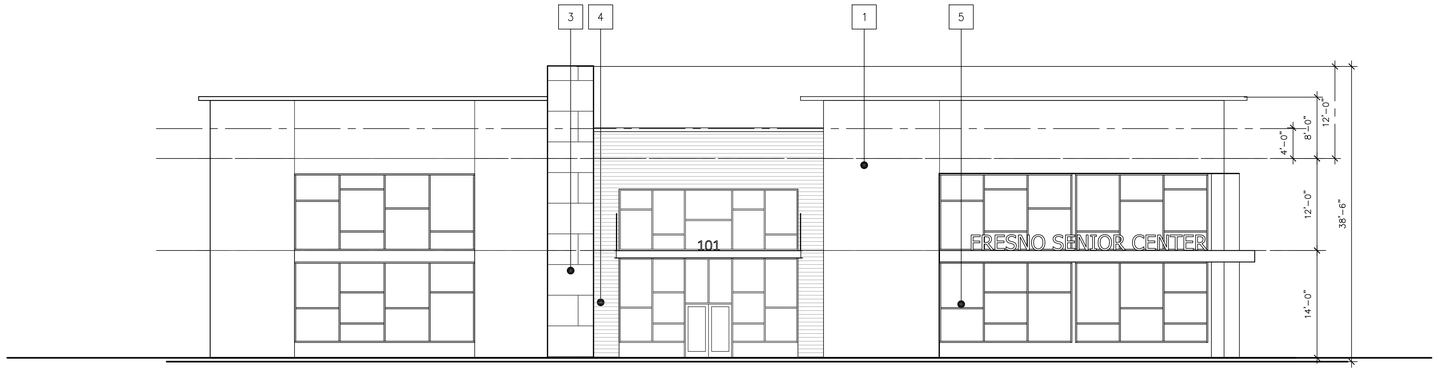

SOUTH ELEVATION (4)
SCALE: 1/8" = 1'-0"

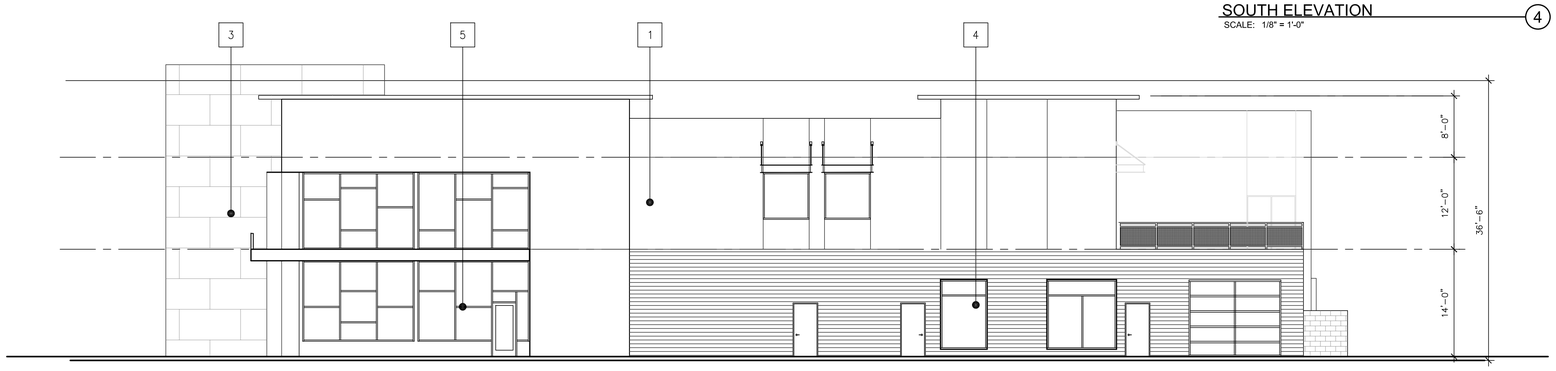

EAST ELEVATION (3)
SCALE: 1/8" = 1'-0"

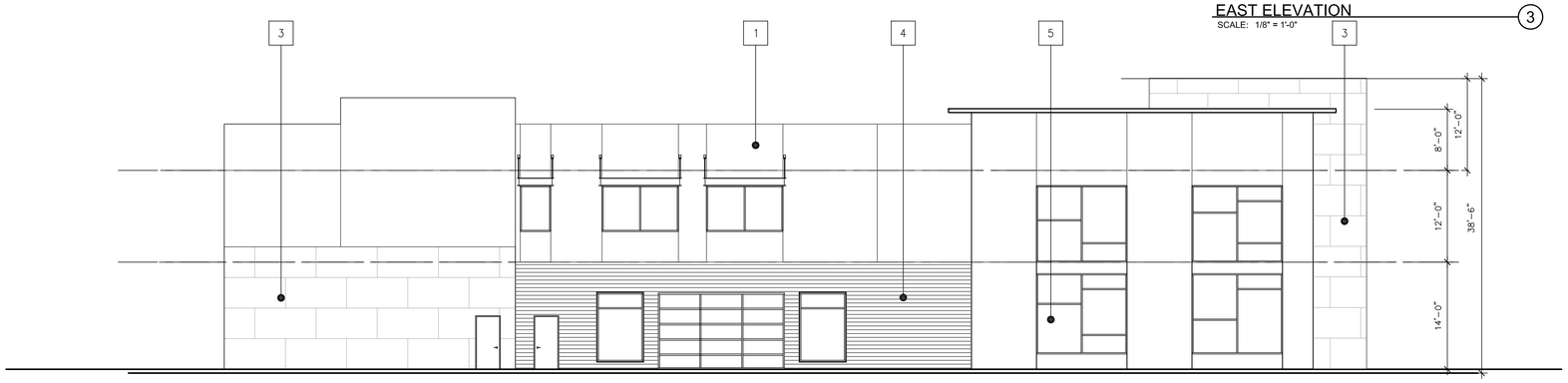

WEST ELEVATION (2)
SCALE: 1/8" = 1'-0"

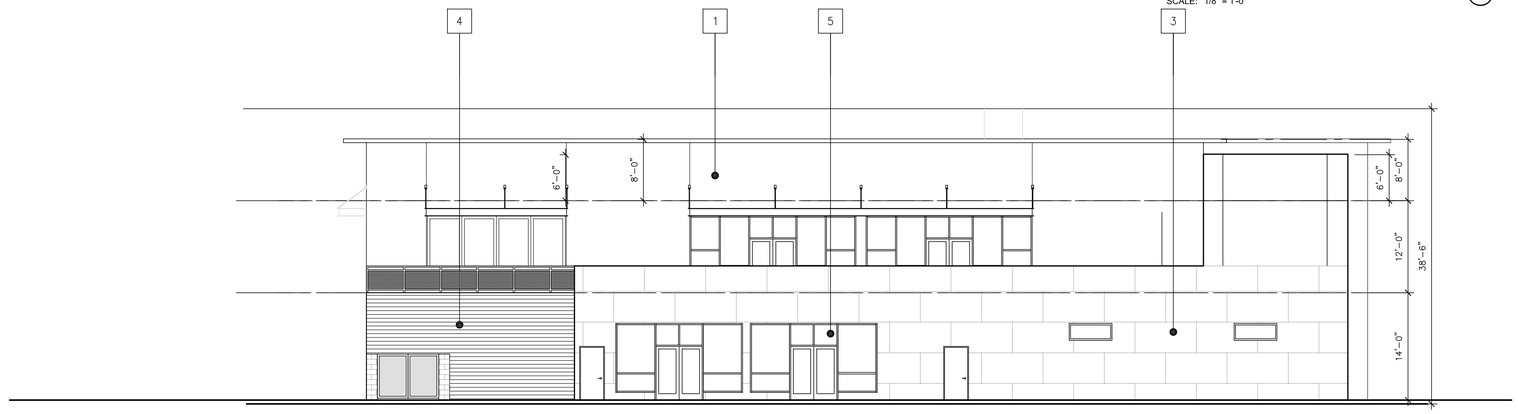

NORTH ELEVATION (1)
SCALE: 1/8" = 1'-0"

The above drawings, specifications, ideas, designs and arrangements represented thereby are and shall remain property of the Architect (YM Architects), and no part thereof shall be copied, disclosed to others or used in connection with any other project other than the specific project for which they have been prepared and developed, without the written consent of the Architect (YM Architects). Visual contact with these drawings or specifications shall constitute conclusive evidence of acceptance of these restrictions. Written dimensions on these drawings shall have pre-over scaled dimensions. Contractors shall verify and be responsible for all dimensions and conditions on the job, and this office must be notified of any variations from the dimensions and conditions shown by these drawings. Shop details must be submitted to this office for approval before proceeding with fabrication. 2024 ©

Y&M Architects
255 South Santa Fe Avenue, Suite 103
Los Angeles, CA 90012
Telephone: 213 623 2107
www.ymarch.com

FRESNO SENIOR CENTER

Project. *

Developer. 20750 Ventura Boulevard, Suite 155
Woodland Hills, CA 91364

Date 09.26.24

Page A-05

P:\2023\FRESNO 3 - ICD\01_CAD\00_SHEETS\DD SET\A-05 SENIOR CENTER (EXTERIOR ELEVATIONS).DWG
9/26/2024 1:55 PM

DOOR SCHEDULE

NOTE:
DOOR AND DOOR FRAME COLORS AND FINISHES ARE TO BE CHOSEN BY THE OWNER

DOOR NUMBER	SIZE WIDTH x HEIGHT	FIRE RATING	CORE	MATERIAL	THICKNESS	DOOR TYPE	FRAME MATERIAL	DETAILS HEAD	 JAMB	 SILL	HARDWARE EXTERIOR/ INTERIOR	DOOR AND DOOR FRAME FINISH	REMARKS
GROUND LEVEL FLOOR PLAN													
1-101.1	3'-0" x 7'-0" (PAIR)	NON RATED	–	ALUMINUM WITH GLASS	VERIFY WITH MANUFACTURER		ANODIZED ALUMINUM					ANODIZED ALUMINUM	ENTRY LOBBY STOREFRONT DOORS WITH TOP TRANSOM STOREFRONT; ELECTRIC SLIDING DOORS; SELF CLOSER; TEMPERED SAFETY GLASS; WEATHERSTRIPPING; EGRESS DOOR
1-102.1	3'-6" x 6'-8"	60 MIN.	–	METAL 60 MIN.	1 3/4"						LEVER		ELEVATOR MACHINE ROOM RAISED PANEL; WELDED METAL FRAME
1-103.1	3'-6" x 6'-8"	20 MIN.	–	METAL 20 MIN.	1 3/4"		METAL 20 MINUTE			–	LEVER LEVER	PAINT	ELEVATOR SMOKE DOOR: SELF-CLOSER AND SMOKE GASKET
1-104.1	3'-0" x 6'-8"	NON RATED	–	METAL NON-RATED	1 3/4"						LEVER LEVER		PUBLIC RESTROOM ENTRY DOOR; RAISED PANEL; WELDED METAL FRAME; WITH SELF-CLOSER AND SMOKE GASKET
1-105.1	3'-0" x 6'-8"	NON RATED	–	METAL NON-RATED	1 3/4"						LEVER LEVER		PUBLIC RESTROOM ENTRY DOOR; RAISED PANEL; WELDED METAL FRAME; WITH SELF-CLOSER AND SMOKE GASKET
1-107.1	3'-0" x 6'-8"	NON RATED	–	METAL NON-RATED	1 3/4"						LEVER LEVER		GYM ENTRY DOOR; RAISED PANEL; WELDED METAL FRAME; WITH SELF-CLOSER AND SMOKE GASKET
1-107.2	3'-0" x 6'-8"	NON RATED	–	METAL NON-RATED	1 3/4"						LEVER LEVERE		GYM ENTRY DOOR; RAISED PANEL; WELDED METAL FRAME; WITH SELF-CLOSER AND SMOKE GASKET
1-108.1	3'-0" x 6'-8"	NON RATED	–	METAL NON-RATED	1 3/4"						LEVER PANIC		CORRIDOR EXTERIOR DOOR; FLAT PANEL; WELDED METAL FRAME; WITH SMOKE GASKET
1-109.1	3'-0" x 6'-8"	NON RATED	–	METAL NON-RATED	1 3/4"						LEVER LEVER		MEN'S LOCKER ROOM ENTRY DOOR; RAISED PANEL; WELDED METAL FRAME; WITH SELF-CLOSER AND SMOKE GASKET
1-110.1	3'-0" x 6'-8"	NON RATED	–	METAL NON-RATED	1 3/4"						LEVER LEVER		WOMEN'S LOCKER ROOM ENTRY DOOR; RAISED PANEL; WELDED METAL FRAME; WITH SELF-CLOSER AND SMOKE GASKET
1-111.1	3'-0" x 6'-8"	NON RATED	–	METAL NON-RATED	1 3/4"						LEVER LEVER		UTILITY CLOSET ROOM ENTRY DOOR; FLAT PANEL; WELDED METAL FRAME; WITH SMOKE GASKET
1-112.1	3'-0" x 6'-8"	NON RATED	–	METAL NON-RATED	1 3/4"						LEVER LEVER		UTILITY CLOSET ROOM ENTRY DOOR; FLAT PANEL; WELDED METAL FRAME; WITH SMOKE GASKET
1-113.1	3'-0" x 6'-8"	NON RATED	–	METAL NON-RATED	1 3/4"						LEVER PANIC		AEROBICS ROOM ENTRY DOOR; RAISED PANEL; WELDED METAL FRAME; WITH SELF-CLOSER AND SMOKE GASKET
1-113.2	3'-0" x 6'-8"	NON RATED	–	METAL NON-RATED	1 3/4"						LEVER PANIC		STORAGE ROOM DOOR; RAISED PANEL; WELDED METAL FRAME
1-114.1	3'-0" x 6'-8"	NON RATED	–	METAL NON-RATED	1 3/4"						LEVER LEVER		TV/TELEPHONE ALARM ROOM ENTRY DOOR; FLAT PANEL; WELDED METAL FRAME; WITH SMOKE GASKET
1-115.1	3'-0" x 6'-8"	NON RATED	–	METAL NON-RATED	1 3/4"						LEVER LEVER		ELECTRICAL ROOM EXTERIOR DOOR; FLAT PANEL; WELDED METAL FRAME; WITH WEATHER STRIP
1-116.1	3'-0" x 7'-0"(PAIR)	NON RATED	–		VERIFY WITH MANUFACTURER		ALUMINUM				LEVER PANIC		STOREFRONT DOORS TEMPERED SAFETY GLASS; WEATHERSTRIPPING
1-116.2	3'-0" x 7'-0"(PAIR)	NON RATED	–		VERIFY WITH MANUFACTURER		ALUMINUM				LEVER PANIC		STOREFRONT DOORS TEMPERED SAFETY GLASS; WEATHERSTRIPPING
1-116A.1	3'-0" x 6'-8"	NON RATED	–	METAL NON-RATED	1 3/4"						LEVER LEVER		STORAGE ROOM DOOR; RAISED PANEL; WELDED METAL FRAME; WITH SELF-CLOSER AND SMOKE GASKET
1-116.3	3'-0" x 7'-0"	NON RATED	–		VERIFY WITH MANUFACTURER		ALUMINUM				LEVER PANIC		STOREFRONT DOORS TEMPERED SAFETY GLASS; WEATHERSTRIPPING
1-117.1	3'-0" x 6'-8"	NON RATED	–	METAL NON-RATED	1 3/4"						LEVER LEVER		OFFICE SPACE HALLWAY ENTRY DOOR; RAISED PANEL; WELDED METAL FRAME; WITH SELF-CLOSER AND SMOKE GASKET
1-120.1	3'-0" x 6'-8"	NON RATED	–	METAL NON-RATED	1 3/4"						LEVER LEVER		MEETING ROOM ENTRY DOOR; RAISED PANEL; WELDED METAL FRAME; WITH SELF-CLOSER AND SMOKE GASKET
1-120.2	3'-0" x 6'-8"	NON RATED	–	METAL NON-RATED	1 3/4"						LEVER LEVER		MEETING ROOM ENTRY DOOR; RAISED PANEL; WELDED METAL FRAME; WITH SELF-CLOSER AND SMOKE GASKET
1-121.1	3'-0" x 6'-8"	NON RATED	–	METAL NON-RATED	1 3/4"						LEVER LEVER		OFFICE ENTRY DOOR; RAISED PANEL; WELDED METAL FRAME; WITH SELF-CLOSER AND SMOKE GASKET
1-122.1	3'-0" x 6'-8"	NON RATED	–	METAL NON-RATED	1 3/4"						LEVER LEVER		OFFICE ENTRY DOOR; RAISED PANEL; WELDED METAL FRAME; WITH SELF-CLOSER AND SMOKE GASKET
1-123.1	3'-0" x 6'-8"	NON RATED	–	METAL NON-RATED	1 3/4"						LEVER LEVER		CONFERENCE ROOM ENTRY DOOR; RAISED PANEL; WELDED METAL FRAME; WITH SELF-CLOSER AND SMOKE GASKET
1-126.1	3'-0" x 6'-8"	NON RATED	–	METAL NON-RATED	1 3/4"						LEVER LEVER		RESTROOM ENTRY DOOR; RAISED PANEL; WELDED METAL FRAME; WITH SELF-CLOSER AND SMOKE GASKET
1-127.1	3'-0" x 6'-8"	NON RATED	–	METAL NON-RATED	1 3/4"						LEVER PANIC		OFFICE SPACE HALLWAY EXIT DOOR; FLAT PANEL; WELDED METAL FRAME; WITH SELF-CLOSER AND WEATHER STRIPPING
1-128.1	3'-0" x 6'-8"	NON RATED	–	METAL NON-RATED	1 3/4"						LEVER LEVER		STAFF BREAK ROOM ENTRY DOOR; FLAT PANEL; WELDED METAL FRAME; WITH SMOKE GASKET
1-128.2	3'-0" x 6'-8"	NON RATED	–	METAL NON-RATED	1 3/4"						LEVER LEVER		STAFF BREAK ROOM EXTERIOR DOOR; FLAT PANEL; WELDED METAL FRAME; WITH WEATHER STRIPPING
1-129.1	3'-0" x 6'-8"	NON RATED	–	METAL NON-RATED	1 3/4"						– –		COMMERCIAL KITCHEN PASS-THRU DOOR; RAISED PANEL; WELDED METAL FRAME; WITH SELF-CLOSER
1-130.1	12'-0" x 10'-0"	NON RATED	–	METAL WITH GLASS	VERIFY WITH MANUFACTURER								STORAGE GARAGE SECTION ROLL-UP DOOR; FLAT PANEL; WELDED METAL FRAME; WITH WEATHER STRIPPING
1-130.2	3'-0" x 6'-8" (PAIR)	NON RATED	–	METAL NON-RATED	1 3/4"						LEVER LEVER		STORAGE GARAGE ENTRY DOOR; FLAT PANEL; WELDED METAL FRAME; WITH SMOKE GASKET
1-131.1	3'-0" x 7'-0"	NON RATED	–	METAL NON-RATED	1 3/4"						LEVER LEVER		JANITOR'S CLOSET DOOR; FLAT PANEL; WELDED METAL FRAME
1-132.1	3'-6" x 6'-0" (PAIR)	NON RATED	–	METAL NON-RATED	1 3/4"						LEVER LEVER		BOILER ENCLOSURE GATE;
ST1-1.1	3'-0" x 7'-0"	60 MIN.	–	METAL 60 MIN.	1 3/4"						LEVER LEVER		STAIR DOOR; FLAT PANEL; WELDED METAL FRAME; WITH SMOKE GASKET
ST1-1.2	3'-0" x 7'-0"	60 MIN.	–	METAL 60 MIN.	1 3/4"						LEVER PANIC		STAIR EXIT DOOR; FLAT PANEL; WELDED METAL FRAME; WITH WEATHER STRIPPING
ST2-1.1	3'-0" x 7'-0"	60 MIN.	–	METAL 60 MIN.	1 3/4"						LEVER PANIC		STAIR EXIT DOOR; FLAT PANEL; WELDED METAL FRAME; WITH WEATHER STRIPPING
ST3-1.1	3'-0" x 7'-0"	60 MIN.	–	METAL 60 MIN.	1 3/4"						LEVER PANIC		STAIR EXIT DOOR; FLAT PANEL; WELDED METAL FRAME; WITH WEATHER STRIPPING
SECOND LEVEL FLOOR PLAN													
2-201.1	3'-6" x 6'-8"	20 MIN.	–	METAL 20 MIN.	1 3/4"		METAL 20 MINUTE			–	LEVER LEVER	PAINT	ELEVATOR SMOKE DOOR: SELF-CLOSER AND SMOKE GASKET
2-201.2	3'-0" x 7'-0"	NON RATED	–		VERIFY WITH MANUFACTURER		ALUMINUM				LEVER PANIC		STOREFRONT DOORS TEMPERED SAFETY GLASS; WEATHERSTRIPPING
2-201.3	3'-0" x 7'-0"(PAIR)	NON RATED	–		VERIFY WITH MANUFACTURER		ALUMINUM				LEVER LEVER		STOREFRONT DOORS TEMPERED SAFETY GLASS; WEATHERSTRIPPING
2-201.4	3'-0" x 7'-0"(PAIR)	NON RATED	–		VERIFY WITH MANUFACTURER		ALUMINUM				LEVER LEVER		STOREFRONT DOORS TEMPERED SAFETY GLASS; WEATHERSTRIPPING
2-202.1	6'-0" x 6'-8"	NON RATED	–	WOOD	1 3/4"								MULTI-USE ROOM SLIDING CLOSET DOOR;
2-202.2	3'-0" x 6'-8" (PAIR)	NON RATED	–	METAL NON-RATED	1 3/4"						LEVER LEVER		MULTI-USE ROOM ENTRY DOOR; RAISED PANEL; WELDED METAL FRAME; WITH SELF-CLOSER AND SMOKE GASKET
2-203.1	3'-0" x 6'-8"	NON RATED	–	METAL NON-RATED	1 3/4"						LEVER LEVER		COMPUTER ROOM ENTRY DOOR; RAISED PANEL; WELDED METAL FRAME; WITH SELF-CLOSER AND SMOKE GASKET
2-204.1	3'-0" x 6'-8"	NON RATED	–	METAL NON-RATED	1 3/4"						LEVER LEVER		PUBLIC RESTROOM ENTRY DOOR; RAISED PANEL; WELDED METAL FRAME; WITH SELF-CLOSER AND SMOKE GASKET
2-205.1	3'-0" x 6'-8"	NON RATED	–	METAL NON-RATED	1 3/4"						LEVER LEVER		PUBLIC RESTROOM ENTRY DOOR; RAISED PANEL; WELDED METAL FRAME; WITH SELF-CLOSER AND SMOKE GASKET
2-206.1	3'-0" x 6'-8"	NON RATED	–	METAL NON-RATED	1 3/4"						LEVER LEVER		MULTI-USE ROOM ENTRY DOOR; RAISED PANEL; WELDED METAL FRAME; WITH SELF-CLOSER AND SMOKE GASKET
2-206.2	3'-0" x 6'-8"	NON RATED	–	METAL NON-RATED	1 3/4"						LEVER LEVER		MULTI-USE ROOM ENTRY DOOR; RAISED PANEL; WELDED METAL FRAME; WITH SELF-CLOSER AND SMOKE GASKET
2-206.3	8'-0" x 6'-8"	NON RATED	–	WOOD									8'-0" WIDE DOOR OPENING SLIDING CLOSET DOOR
2-207.1	3'-0" x 7'-0"	NON RATED	–	METAL NON-RATED	1 3/4"						LEVER LEVER		HALLWAY DOOR; FLAT PANEL; WELDED METAL FRAME; WITH WEATHER STRIPPING
2-208.1	3'-0" x 6'-8" (PAIR)	NON RATED	–	METAL NON-RATED	1 3/4"						LEVER LEVER		STORAGE ROOM EXTERIOR DOOR; FLAT PANEL; WELDED METAL FRAME; WITH WEATHER STRIPPING
2-209.1	3'-0" x 6'-8"	60 MINUTE	–	METAL	1 3/4"		METAL 60 MINUTE				LEVER PANIC		ELECTRICAL ROOM EXTERIOR DOOR; FLAT PANEL; WELDED METAL FRAME; WITH WEATHER STRIPPING
2-210.1	16'-0" x 6'-8"	NON RATED	–	WOOD									GAME ROOM DOORS 16'-0" WIDE DOOR OPENING TWO PANEL BI-PASS DOOR
2-210.2	3'-0" x 6'-8"	NON RATED	–		1 3/4"		METAL				LEVER PANIC		FRENCH DOOR TEMPERED SAFETY GLASS
2-210.3	3'-0" x 6-8"	NON RATED	–		1 3/4"		METAL				LEVER PANIC		FRENCH DOOR TEMPERED SAFETY GLASS
2-211.1	3'-0" x 6-8" (PAIR)	NON RATED	–		1 3/4"		METAL				LEVER PANIC		FRENCH DOOR TEMPERED SAFETY GLASS
2-211.2	3'-0" x 6-8"	NON RATED	–		1 3/4"		METAL				LEVER PANIC		FRENCH DOOR TEMPERED SAFETY GLASS
2-212.1	3'-0" x 6'-8"	NON RATED	–	METAL NON-RATED	1 3/4"						LEVER LEVER		PUBLIC BATHROOM ENTRY DOOR; RAISED PANEL; WELDED METAL FRAME; WITH SELF-CLOSER AND SMOKE GASKET
2-212A.1	3'-0" x 6'-8"	NON RATED	–	METAL NON-RATED	1 3/4"						LEVER LEVER		TOILETRY CLOSET RAISED PANEL; WELDED METAL FRAME; WITH SELF-CLOSER
2-213.1	3'-0" x 6'-8"	NON RATED	–	METAL NON-RATED	1 3/4"						LEVER LEVER		PUBLIC BATHROOM ENTRY DOOR; RAISED PANEL; WELDED METAL FRAME; WITH SELF-CLOSER AND SMOKE GASKET
2-213A.1	3'-0" x 6'-8"	NON RATED	–	METAL NON-RATED	1 3/4"						LEVER LEVER		TOILETRY CLOSET RAISED PANEL; WELDED METAL FRAME; WITH SELF-CLOSER
2-215.1	3'-0" x 6'-8"	NON RATED	–	METAL NON-RATED	1 3/4"						LEVER LEVER		STORAGE ROOM RAISED PANEL; WELDED METAL
2-216.1	3'-0" x 6'-8" (PAIR)	NON RATED	–		1 3/4"		METAL				LEVER LEVER		ART ROOM FRENCH DOOR TEMPERED SAFETY GLASS
2-216.2	18'-0" x 10'-0"	NON RATED	–		VERIFY WITH MANUFACTURER		METAL				LEVER LEVER		ART ROOM FOLDING AND SLIDING EXTERIOR BIFOLD DOOR SYSTEMS TEMPERED SAFETY GLASS; WEATHERSTRIPPING
2-216.3	5'-0" x 6'-8"	NON RATED	–	WOOD	1 3/4"								ART ROOM SLIDING CLOSET DOOR
ST1-2.1	3'-0" x 7'-0"	60 MIN.	–	METAL 60 MIN.	1 3/4"						LEVER PANIC		STAIR EXIT DOOR; FLAT PANEL; WELDED METAL FRAME; WITH SMOKE GASKET
ST1-2.2	3'-0" x 7'-0"	60 MIN.	–	METAL 60 MIN.	1 3/4"						LEVER PANIC		STAIR EXIT DOOR; FLAT PANEL; WELDED METAL FRAME; WITH WEATHERSTRIPPING
ST2-2.1	3'-0" x 7'-0"	60 MIN.	–	METAL 60 MIN.	1 3/4"						LEVER PANIC		STAIR EXIT DOOR; FLAT PANEL; WELDED METAL FRAME; WITH SMOKE GASKET
ST3-2.1	3'-0" x 7'-0"	60 MIN.	–	METAL 60 MIN.	1 3/4"						LEVER PANIC		STAIR EXIT DOOR; FLAT PANEL; WELDED METAL FRAME; WITH SMOKE GASKET

WINDOW SCHEDULE (BUILDING COMMON AREAS)

WINDOW SYMBOL	FRAME SIZE WIDTH x HEIGHT	TYPE	DETAILS HEAD	 JAMB	 SILL	FRAME MATERIAL	GLAZING TYPE	REMARKS
GROUND LEVEL FLOOR PLAN								
1-101A	8'-7" x 11'-0"					ANODIZED ALUMINUM	INSULATED GLASS TEMPERED	ENTRY LOBBY: STOREFRONT ANODIZED WITH TEMPERED SAFETY GLAZING
1-101B	8'-7" x 11'-0"					ANODIZED ALUMINUM	INSULATED GLASS TEMPERED	ENTRY LOBBY: STOREFRONT ANODIZED WITH TEMPERED SAFETY GLAZING
1-101C	6'-1 1/2" x 5'-10"					ANODIZED ALUMINUM	INSULATED GLASS TEMPERED	ENTRY LOBBY: STOREFRONT ANODIZED WITH TEMPERED SAFETY GLAZING
1-106A	23'-6" x 10'-6"					ANODIZED ALUMINUM	INSULATED GLASS TEMPERED	MULTI-USE AREA/ LIBRARY STOREFRONT ANODIZED WITH TEMPERED SAFETY GLAZING
1-106B	11'-10" x 10'-6"					ANODIZED ALUMINUM	INSULATED GLASS TEMPERED	MULTI-USE AREA/ LIBRARY STOREFRONT ANODIZED WITH TEMPERED SAFETY GLAZING
1-106C	11'-10" x 10'-6"					ANODIZED ALUMINUM	INSULATED GLASS TEMPERED	MULTI-USE AREA/ LIBRARY STOREFRONT ANODIZED WITH TEMPERED SAFETY GLAZING
1-107A	6'-0" x 10'-0"					ANODIZED ALUMINUM	INSULATED GLASS TEMPERED	GYM STOREFRONT ANODIZED WITH TEMPERED SAFETY GLAZING
1-107B	6'-0" x 10'-0"					ANODIZED ALUMINUM	INSULATED GLASS TEMPERED	GYM STOREFRONT ANODIZED WITH TEMPERED SAFETY GLAZING
1-109A	5'-6" x 2'-0"					ANODIZED ALUMINUM	INSULATED GLASS TEMPERED	MEN'S LOCKER ROOM STOREFRONT ANODIZED WITH TEMPERED SAFETY GLAZING
1-110A	5'-6" x 2'-0"					ANODIZED ALUMINUM	INSULATED GLASS TEMPERED	WOMEN'S LOCKER ROOM STOREFRONT ANODIZED WITH TEMPERED SAFETY GLAZING
1-118A	30'-0" x 10'-6"					ANODIZED ALUMINUM	INSULATED GLASS TEMPERED	COMMON AREA STOREFRONT ANODIZED WITH TEMPERED SAFETY GLAZING
1-118B	35'-4" x 10'-6"					ANODIZED ALUMINUM	INSULATED GLASS TEMPERED	COMMON AREA STOREFRONT ANODIZED WITH TEMPERED SAFETY GLAZING
1-119A	6'-0" x 7'-0"					ANODIZED ALUMINUM	INSULATED GLASS TEMPERED	COFFEE BAR STOREFRONT ANODIZED WITH TEMPERED SAFETY GLAZING
1-119B	6'-0" x 7'-0"					ANODIZED ALUMINUM	INSULATED GLASS TEMPERED	COFFEE BAR STOREFRONT ANODIZED WITH TEMPERED SAFETY GLAZING
1-119C	6'-0" x 7'-0"					ANODIZED ALUMINUM	INSULATED GLASS TEMPERED	COFFEE BAR STOREFRONT ANODIZED WITH TEMPERED SAFETY GLAZING
1-127A	6'-0" x 10'-0"					ANODIZED ALUMINUM	INSULATED GLASS TEMPERED	HALLWAY STOREFRONT ANODIZED WITH TEMPERED SAFETY GLAZING
1-128A	9'-0" x 10'-0"					ANODIZED ALUMINUM	INSULATED GLASS TEMPERED	STAFF BREAK ROOM STOREFRONT ANODIZED WITH TEMPERED SAFETY GLAZING
SECOND LEVEL FLOOR PLAN								
2-201A	23'-4" x 8'-0"					ANODIZED ALUMINUM	INSULATED GLASS TEMPERED	COMMON AREA: STOREFRONT ANODIZED WITH TEMPERED SAFETY GLAZING
2-201B	21'-8" x 10'-6"					ANODIZED ALUMINUM	INSULATED GLASS TEMPERED	COMMON AREA: STOREFRONT ANODIZED WITH TEMPERED SAFETY GLAZING
2-201C	21'-8" x 10'-6"					ANODIZED ALUMINUM	INSULATED GLASS TEMPERED	COMMON AREA: STOREFRONT ANODIZED WITH TEMPERED SAFETY GLAZING
2-202A	23'-6" x 10'-6"					ANODIZED ALUMINUM	INSULATED GLASS TEMPERED	MULTI-USE ROOM STOREFRONT ANODIZED WITH TEMPERED SAFETY GLAZING
2-202B	11'-10" x 10'-6"					ANODIZED ALUMINUM	INSULATED GLASS TEMPERED	MULTI-USE ROOM STOREFRONT ANODIZED WITH TEMPERED SAFETY GLAZING
2-203A	11'-10" x 10'-6"					ANODIZED ALUMINUM	INSULATED GLASS TEMPERED	COMPUTER ROOM STOREFRONT ANODIZED WITH TEMPERED SAFETY GLAZING
2-206A	9'-10" x 6'-0"					ANODIZED ALUMINUM	INSULATED GLASS TEMPERED	MULTI-USE ROOM STOREFRONT ANODIZED WITH TEMPERED SAFETY GLAZING
2-206B	9'-10" x 6'-0"					ANODIZED ALUMINUM	INSULATED GLASS TEMPERED	MULTI-USE ROOM STOREFRONT ANODIZED WITH TEMPERED SAFETY GLAZING
2-207A	4'-0" x 6'-0"					ANODIZED ALUMINUM	INSULATED GLASS TEMPERED	HALLWAY STOREFRONT ANODIZED WITH TEMPERED SAFETY GLAZING
2-210A	17'-6" x 7'-0"					ANODIZED ALUMINUM	INSULATED GLASS TEMPERED	GAME ROOM NO.2 STOREFRONT ANODIZED WITH TEMPERED SAFETY GLAZING
2-210B	11'-10" x 7'-0"					ANODIZED ALUMINUM	INSULATED GLASS TEMPERED	GAME ROOM NO.2 STOREFRONT ANODIZED WITH TEMPERED SAFETY GLAZING
2-210C	11'-10" x 7'-0"					ANODIZED ALUMINUM	INSULATED GLASS TEMPERED	GAME ROOM NO.2 STOREFRONT ANODIZED WITH TEMPERED SAFETY GLAZING
2-211A	30'-0" x 10'-6"					ANODIZED ALUMINUM	INSULATED GLASS TEMPERED	MULTI-USE ROOM STOREFRONT ANODIZED WITH TEMPERED SAFETY GLAZING
2-211B	35'-4" x 10'-6"					ANODIZED ALUMINUM	INSULATED GLASS TEMPERED	MULTI-USE ROOM STOREFRONT ANODIZED WITH TEMPERED SAFETY GLAZING
2-216A	6'-0" x 6'-0"					ANODIZED ALUMINUM	INSULATED GLASS TEMPERED	ART ROOM STOREFRONT ANODIZED WITH TEMPERED SAFETY GLAZING
2-216B	6'-0" x 6'-0"					ANODIZED ALUMINUM	INSULATED GLASS TEMPERED	ART ROOM STOREFRONT ANODIZED WITH TEMPERED SAFETY GLAZING

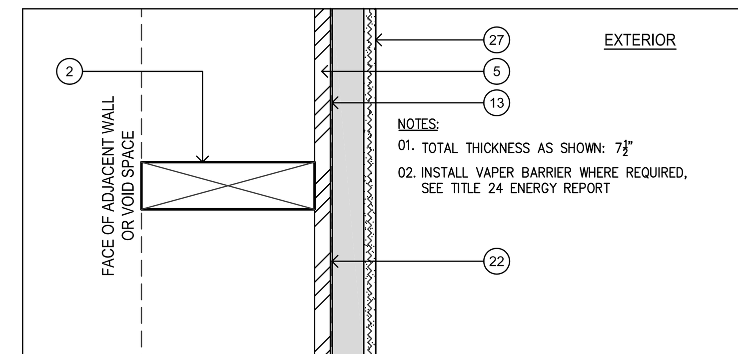

E-6 NON-RATED: EXTERIOR FURRED WALL

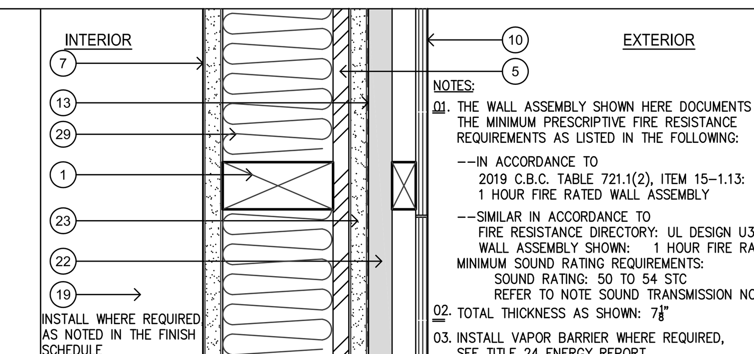

E-4 1 HOUR FIRE RATED RESISTANCE: (GENERIC) EXTERIOR FIBER CEMENT LAP SIDING SHEAR WALL

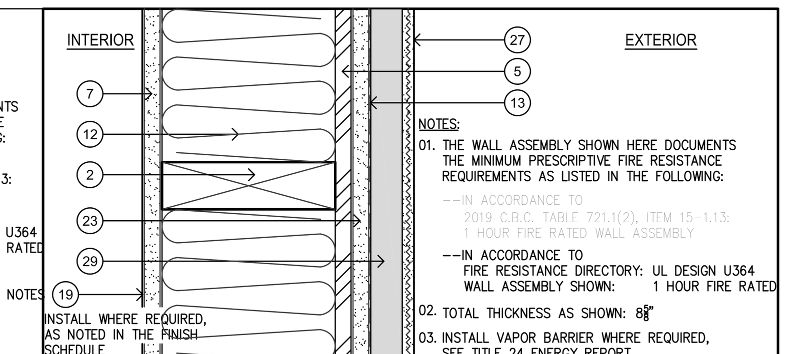

E-2 1 HOUR FIRE RATED RESISTANCE: EXTERIOR PORTLAND CEMENT PLASTER SHEAR WALL

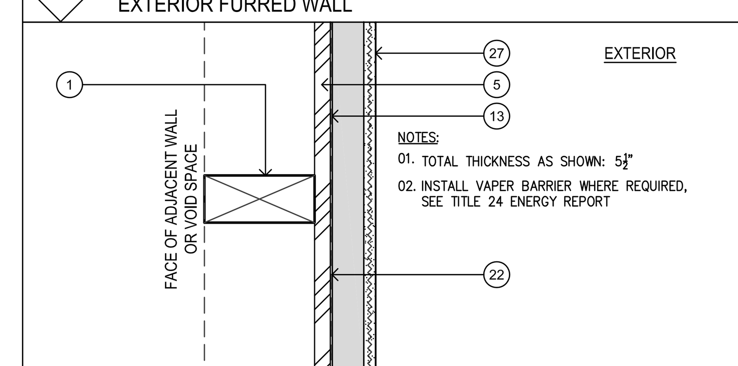

E-5 NON-RATED: EXTERIOR FURRED WALL

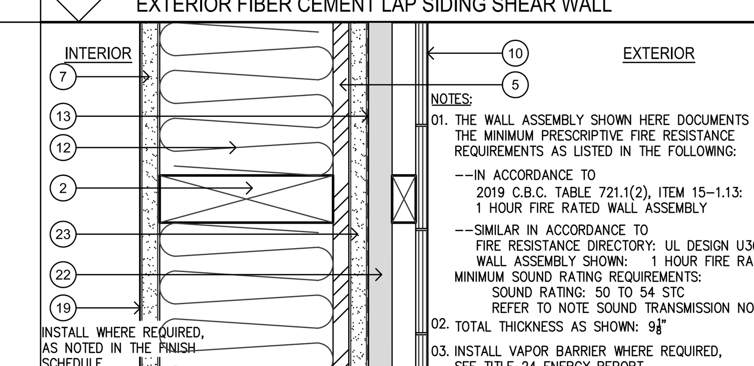

E-3 1 HOUR FIRE RATED RESISTANCE: (GENERIC) EXTERIOR FIBER CEMENT LAP SIDING SHEAR WALL

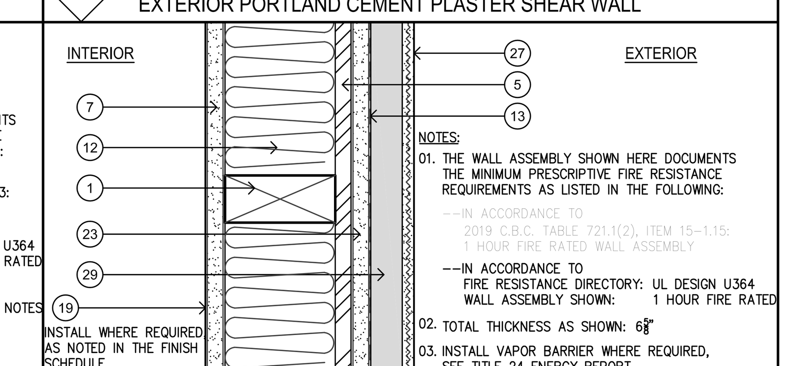

E-1 1 HOUR FIRE RATED RESISTANCE: EXTERIOR PORTLAND CEMENT PLASTER SHEAR WALL

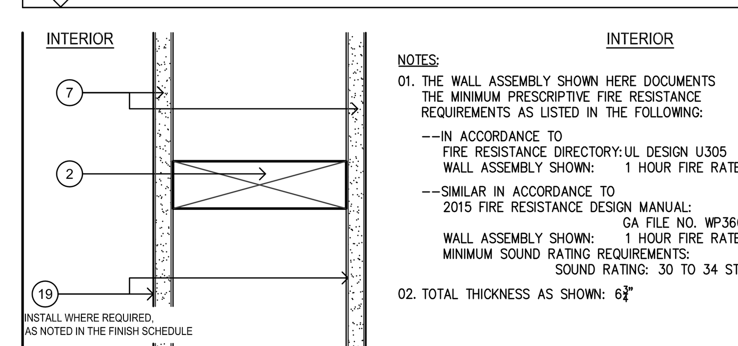

I-2 1 HOUR FIRE RATED RESISTANCE: INTERIOR WALL

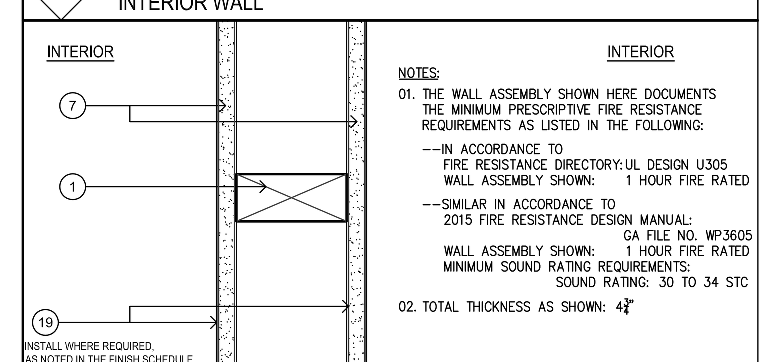

I-1 1 HOUR FIRE RATED RESISTANCE: INTERIOR WALL

WALL TYPE ASSEMBLY KEY NOTES:

1. 2x4 WOOD STUDS AT 16" O.C., UNLESS SPACING IS OTHERWISE NOTED SEE STRUCTURAL DRAWINGS
2. 2x6 WOOD STUDS AT 16" O.C., UNLESS SPACING IS OTHERWISE NOTED SEE STRUCTURAL DRAWINGS
3. 3⅝" METAL STUDS 25 GAUGE AT 16" O.C., (24" O.C. MAX.)
4. 6" METAL STUDS 25 GAUGE AT 16" O.C., (24" O.C. MAX.)
5. ½" PLYWOOD SHEATHING, WHERE OCCURS SEE STRUCTURAL DRAWINGS
6. EXTERIOR PORTLAND CEMENT PLASTER: (3-COAT SYSTEM), OVER SELF-FURRED, EXTERIOR PAPER BACKED CORROSION RESISTANT WIRE FABRIC LATH
7. ⅝" THICK TYPE 'X' GYPSUM WALLBOARD
8. ½" THICK TYPE 'C' GYPSUM WALLBOARD
9. ½" RESILIENT CHANNEL, 25 MSG. GALVANIZED, INSTALLATION PERPENDICULAR TO STUDS, NOTE: SEE GENERAL NOTES UNDER "SOUND RATING COEFFICIENT REQUIREMENTS" FOR VERTICAL SPACING
10. 5/16" THICK FIBER CEMENT LAP SIDING
11. ½" FIBERGLASS FACED EXTERIOR GYPSUM SHEATHING
12. UNFACED GLASS FIBER BLANKET INSULATION, SEE TITLE 24 ENERGY REPORT
13. 2 LAYERS OF GRADE D MOISTURE RESISTANT BARRIER
14. 1½" FURRING CHANNEL AT 16" O.C.
15. ⅞" FURRING CHANNEL AT 16" O.C.
16. 6" CMU BLOCK WALL WITH SOLID GROUTING, SEE STRUCTURAL DRAWINGS
17. 8" CMU BLOCK WALL WITH SOLID GROUTING, SEE STRUCTURAL DRAWINGS
18. 12" CMU BLOCK WALL WITH SOLID GROUTING, SEE STRUCTURAL DRAWINGS
19. ⅝" THICK MOISTURE RESISTANT TYPE "X" GYPSUM WALLBOARD NOTE: INSTALL MOISTURE RESISTANT TYPE "X" GYPSUM WALLBOARD AS NOTED IN THE FINISH SCHEDULE
20. STONE VENEER: ICC-ES EVALUATION REPORT: ESR 1364
21. ⅛" THICK THINSET MORTAR
22. R-5 CONTINUOUS RIGID INSULATION: ICC-ES EVALUATION REPORT: ESR 2142
23. ⅝" TYPE "X" EXTERIOR GYPSUM SHEATHING
24. ½" THICK REGULAR GYPSUM WALLBOARD
25. ½" THICK MOISTURE RESISTANT REGULAR GYPSUM WALLBOARD
26. MINERAL WOOL FIBER INSULATION, SEE TITLE 24 ENERGY REPORT
27. EXTERIOR PORTLAND CEMENT PLASTER: OMEGA DIAMOND WALL (1-COAT SYSTEM), BASE COAT (⅜" THICK MINIMUM) ICC-ES EVALUATION REPORT: ESR-1194 IN COMPLIANCE WITH ASTM C150
28. GLASS FIBER BATTS INSULATION, SEE TITLE 24 ENERGY REPORT NOTE:
    PER UL DESIGN U305: 3 INCH THICK GLASS FIBER BATTS BEARING THE UL CLASSIFICATION MARKING AS TO SURFACE BURNING AND/OR FIRE RESISTANCE, FRICTION-FITTED TO FILL THE INTERIOR OF THE WALL.
    PER UL DESIGN U327: 3 INCH THICK GLASS FIBER BATTS BEARING THE UL CLASSIFICATION MARKING AS TO SURFACE BURNING AND/OR FIRE RESISTANCE, FRICTION-FITTED TO FILL THE INTERIOR OF THE WALL.
29. ¾" THICK R-5 CONTINUOUS RIGID INSULATION: RAMX (TYPE: THERMASHEATH), TECHNICAL EVALUATION REPORT: TER-1309-03

The above drawings, specifications, ideas, designs and arrangements represented thereby are and shall remain property of the Architect (YM Architects), and no part thereof shall be copied, disclosed to others or used in connection with any other project other than the specific project for which they have been prepared and developed, without the written consent of the Architect (YM Architects). Visual contact with these drawings or specifications shall constitute conclusive evidence of acceptance of these restrictions. Written dimensions on these drawings shall have pre-over scaled dimensions. Contractors shall verify and be responsible for all dimensions and conditions on the job, and this office must be notified of any variations from the dimensions and conditions shown by these drawings. Shop details must be submitted to this office for approval before proceeding with fabrication. 2024 ©

Y&M Architects
Y&M Architects
255 South Santa Fe Avenue, Suite 103
Los Angeles, CA 90012
Telephone: 213 623 2107
www.ymarch.com

FRESNO SENIOR CENTER

Project. *

Integrated Community Development

Developer. 20750 Ventura Boulevard, Suite 155
Woodland Hills, CA 91364

P:\2023\FRESNO 2 - ICDN01_CAD\00_SHEETS\0D SET\A-06 SENIOR CENTER (DOOR AND WINDOW SCHEDULES WALL TYPES).DWG
9/26/2024 1:58 PM

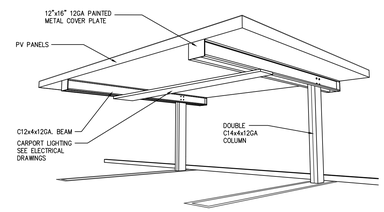

ISOMETRIC / ELEVATION VIEW

SOLAR SHADE STRUCTURE GENERAL NOTES:
01. SOLAR SHADE STRUCTURE AND SOLAR PANEL DESIGN IS BY OTHERS, BOTH DESIGNS ARE TO BE UNDER A DEFERRED SUBMITTAL

02. IN ACCORDANCE TO 2019 C.B.C. SECTION 11B
VERTICAL CLEARANCES:
ALL ENTRANCES, EXITS, AND VEHICULAR PASSAGEWAYS TO AND FROM REQUIRED ACCESSIBLE PARKING SPACES WITHIN PARKING FACILITIES, SHALL HAVE A MINIMUM VERTICAL CLEARANCE OF 8 FEET 2 INCHES FROM THE FLOOR TO THE LOWEST PROJECTION OF THE CEILING.

03. IN ACCORDANCE TO 2019 C.B.C. SECTION 11B-502.5
VERTICAL CLEARANCES:
PARKING SPACES, ACCESS AISLES AND VEHICULAR ROUTES SERVING THEM SHALL PROVIDE A VERTICAL CLEARANCE OF 98 INCHES MINIMUM.

04. IN ACCORDANCE TO 2019 C.B.C. SECTION 406.3.3
SOLAR SHADE STRUCTURES:
SOLAR SHADE STRUCTURE SHALL BE OPEN ON AT LEAST TWO SIDES. SOLAR SHADE STRUCTURE FLOOR SURFACES SHALL BE OF APPROVED NONCOMBUSTIBLE MATERIAL. THE AREA OF FLOOR USED FOR PARKING OF AUTOMOBILES OR OTHER VEHICLES SHALL BE SLOPED TO FACILITATE THE MOVEMENT OF LIQUIDS TO A DRAIN OR TOWARD THE MAIN VEHICLE ENTRY DOORWAY.

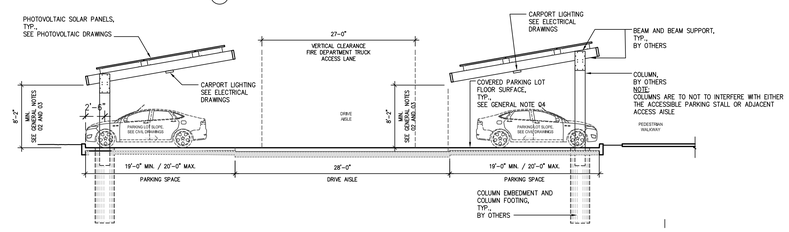

SOLAR SHADE STRUCTURE
COVERED PARKING (1)
SCALE: 1/8" = 1'-0"

The above drawings, specifications, ideas, designs and arrangements represented thereby are and shall remain property of the Architect (YM Architects), and no part thereof shall be copied, disclosed to others or used in connection with any other project other than the specific project for which they have been prepared and developed, without the written consent of the Architect (YM Architects). Visual contact with these drawings or specifications shall constitute conclusive evidence of acceptance of these restrictions. Written dimensions on these drawings shall have pre-over scaled dimensions. Contractors shall verify and be responsible for all dimensions and conditions on the job, and this office must be notified of any variations from the dimensions and conditions shown by these drawings. Shop details must be submitted to this office for approval before proceeding with fabrication.
2024 ©

Y&M Architects
255 South Santa Fe Avenue, Suite 103
Los Angeles, CA 90012
Telephone: 213 623 2107
www.ymarch.com

FRESNO SENIOR CENTER

Project. *

Integrated Community Development

Developer. 20750 Ventura Boulevard, Suite 155
Woodland Hills, CA 91364

Date: 09.26.24

Page: A-07

P:\2023\FRESNO 3 - ICD\01_CAD\00_SHEETS\DD SET\A-07 SENIOR CENTER (SITE DETAILS).DWG
9/26/2024 1:59 PM

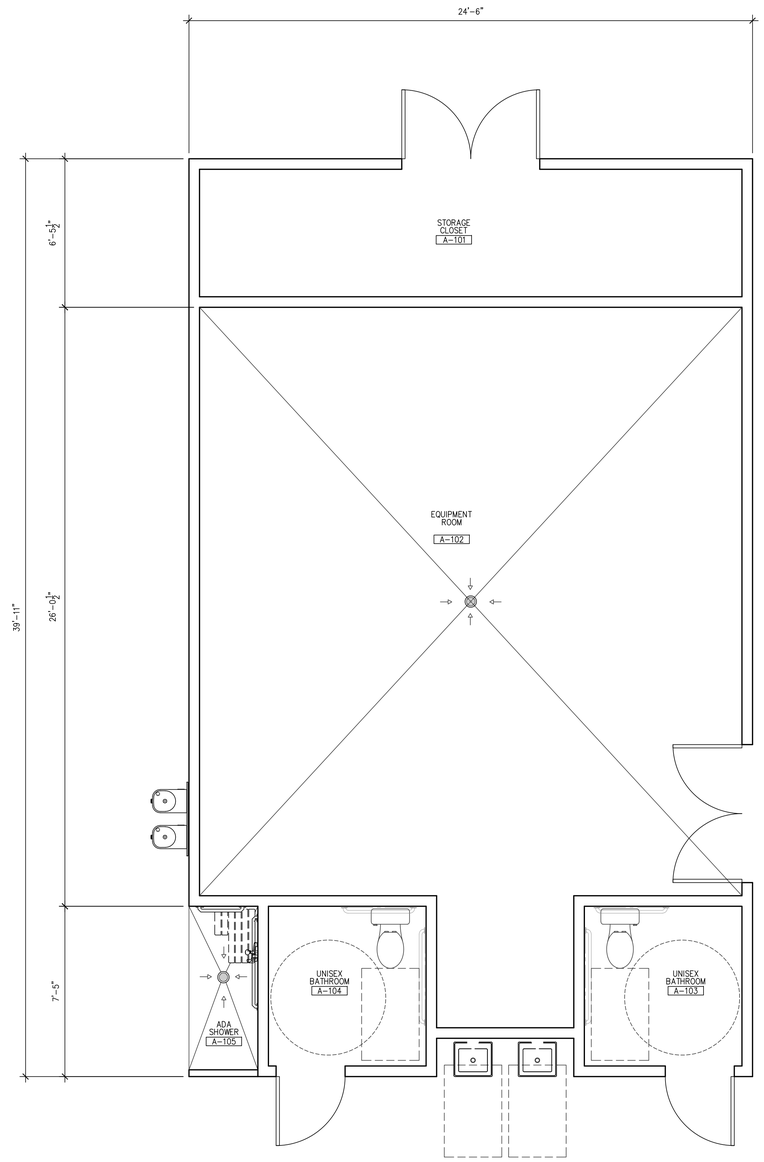

NORTH

SENIOR CENTER POOL EQUIPMENT BUILDING
GROUND LEVEL FLOOR PLAN (1)

SCALE: 3/8" = 1'-0"

The above drawings, specifications, ideas, designs and arrangements represented thereby are and shall remain property of the Architect (YM Architects), and no part thereof shall be copied, disclosed to others or used in connection with any other project other than the specific project for which they have been prepared and developed, without the written consent of the Architect (YM Architects). Visual contact with these drawings or specifications shall constitute conclusive evidence of acceptance of these restrictions, Written dimensions on these drawings shall have pre-over scaled dimensions. Contractors shall verify and be responsible for all dimensions and conditions on the job, and this office must be notified of any variations from the dimensions and conditions shown by these drawings. Shop details must be submitted to this office for approval before proceeding with fabrication. 2024 ©

Y&M Architects

Y&M Architects
255 South Santa Fe Avenue, Suite 103
Los Angeles, CA 90012
Telephone: 213 623 2107
www.ymarch.com

FRESNO SENIOR CENTER (POOL HOUSE)

Integrated Community Development

Project. *

Developer. **20750 Ventura Boulevard, Suite 155**
Woodland Hills, CA 91364

Date **09.26.24**

Page **A-08**

P:\2023\FRESNO 3 - HCD\01_CAD\00_SHEETS\DD SET\A-01 POOL HOUSE (FLOOR PLAN).DWG
9/26/2024 2:16 PM

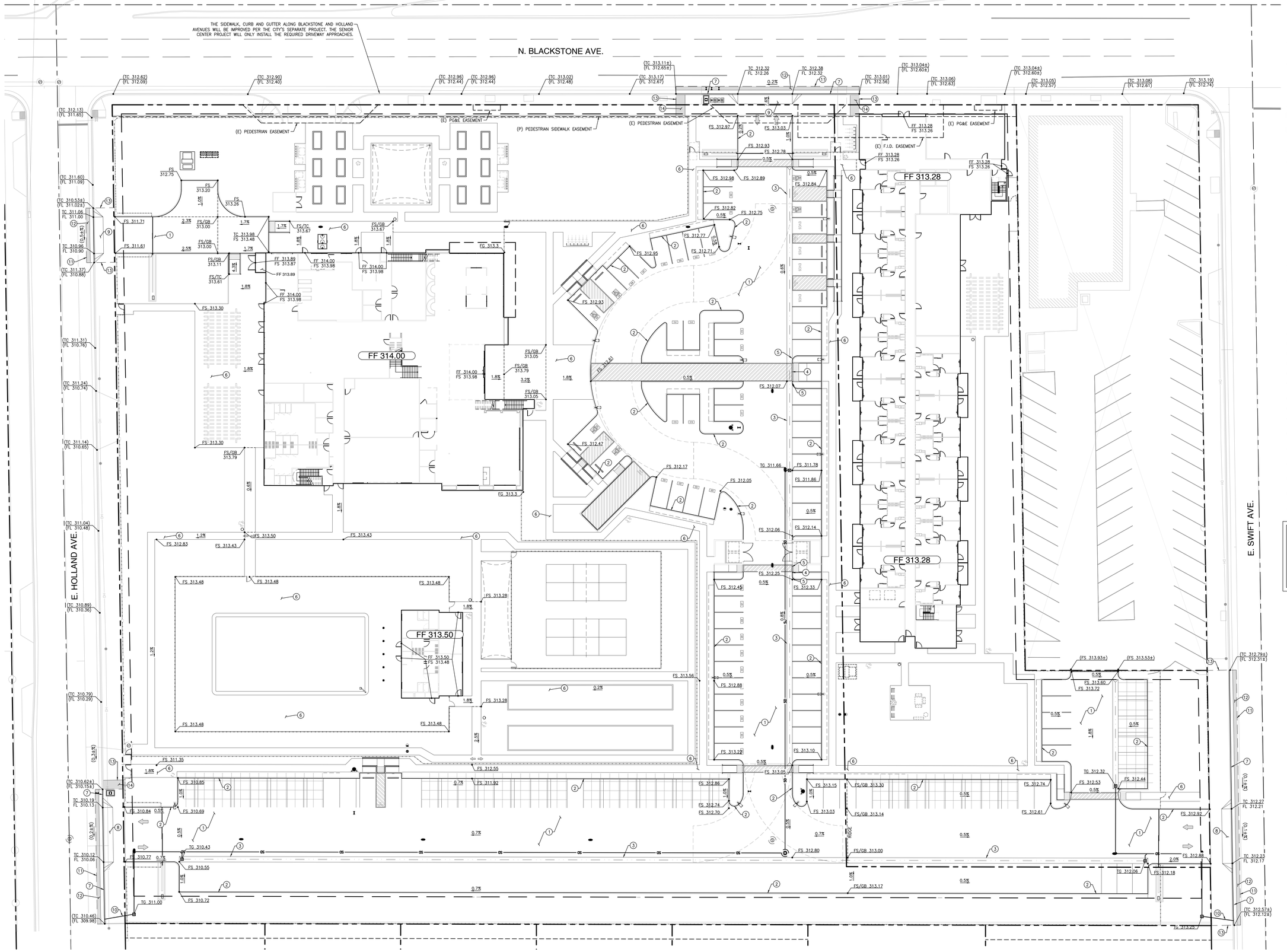

GENERAL LEGEND

- EXISTING/PROPOSED CENTERLINE (℄)
- EXISTING PROPERTY LINE (EX. ℞)
- PROPOSED PROPERTY LINE (℞)
- PROPOSED SETBACK LINE
- EXISTING/PROPOSED EASEMENT
- PROPOSED SAWCUT
- GUTTER FLOWLINE
- PROPOSED CURB AND GUTTER
- PROPOSED SLOTTED CURB
- PROPOSED RETAINING WALL. HEIGHT PER PLAN.
- PROPOSED CONCRETE PAVEMENT/HARDSCAPE
- PROPOSED ASPHALT CONCRETE PAVEMENT
- PROPOSED GRAVEL
- PROPOSED PERVIOUS PAVEMENT
- DEEPENED FOUNDATION WALL. RETAINED HEIGHT PER PLAN. SEE STRUCTURAL PLANS BY OTHERS FOR CONSTRUCTION DETAILS.
- RAISED FOUNDATION WALL. RETAINED HEIGHT PER PLAN. SEE STRUCTURAL PLANS BY OTHERS FOR CONSTRUCTION DETAILS.

GRADING LEGEND

- GB SIDE HINGE — GRADE BREAK
- CUT FILL — DAYLIGHT OF GRADING LIMITS (CUT/FILL LINE)
- LIMIT OF DISTURBANCE
- SWALE
- 100 — CONTOUR MAJOR
- 99 — CONTOUR MINOR
- TOP OF SLOPE
- TOE OF SLOPE
- OVERLAND RELEASE PATH

STORM DRAIN LEGEND:

- 50LF12"SD@0.5% — STORM DRAIN PIPE LENGTH, SIZE AND SLOPE (SD)
- PROPOSED SLOT/TRENCH DRAIN
- ENERGY DISSIPATOR
- DROP INLET
- MANHOLE
- CLEANOUT

GRADING KEY NOTES:

1. PROPOSED CONCRETE PAVEMENT SECTION.
2. PROPOSED 6" VERTICAL CURB PER CITY STANDARD P-5.
3. PROPOSED STANDARD 3' WIDE CONCRETE VALLEY GUTTER.
4. PROPOSED 6' WIDE ADA COMPLIANT VALLEY GUTTER.
5. PROPOSED TRANSITION FROM STANDARD VALLEY GUTTER TO ADA COMPLIANT VALLEY GUTTER.
6. PROPOSED CONCRETE FLATWORK PER CITY STANDARD P-5.
7. PROPOSED 6" CURB, GUTTER AND SIDEWALK PER CITY STANDARD P-5.
8. PROPOSED 30' WIDE DRIVEWAY APPROACH WITH 12' PATTERN PER CITY STANDARD P-2.
9. PROPOSED 20' WIDE DRIVEWAY APPROACH WITH 12' PATTERN PER CITY STANDARD P-2.
10. PROPOSED 3"x5" RECTANGULAR STEEL TUBING CURB THROUGH DRAIN PER CITY STANDARD P-23.
11. SAWCUT AND PAVEOUT. SAWCUT A MINIMUM OF 2' INTO PAVEMENT OR AS NECESSARY TO FORM COMPETENT EDGE.
12. PROPOSED STREET STRUCTURAL SECTION PER CITY STANDARD P-50. WHEN WIDTH IS LESS THAN 4', USE CITY STANDARD P-48 "A".
13. PROPOSED POINT OF CONNECTION TO EXISTING SIDEWALK. CONFORM PROPOSED IMPROVEMENTS TO MATCH EXISTING.
14. PROPOSED ASPHALT PATCH FOR THE INTERIM CONDITION UNTIL THE CITY COMPLETES THEIR IMPROVEMENTS ALONG BLACKSTONE AND HOLLAND.

THE CITY HAS PLANS TO IMPROVE EXISTING PUBLIC INFRASTRUCTURE ALONG BLACKSTONE AND HOLLAND AVENUES. OFFSITE IMPROVEMENTS FOR THE SUBJECT DEVELOPMENT SHALL BE COORDINATED WITH THE CITY'S SEPARATE PROJECT.

0 20' 40'
SCALE: 1" = 20'

811 Know what's below. Call811 before you dig.

NOTE: UTILITIES SHOWN WERE PLOTTED FROM OBSERVED EVIDENCE AND PLANS OBTAINED FROM UTILITY PROVIDERS. EXACT LOCATIONS AND QUANTITIES MAY VARY. THE CONTRACTOR SHALL CONTACT THE UTILITY LOCATING SERVICES PRIOR TO EXCAVATION AND USE EXTREME CAUTION WHEN EXPOSING UTILITIES. ANY DAMAGE TO EXISTING UTILITIES WILL BE THE SOLE RESPONSIBILITY OF THE CONTRACTOR.

REGISTERED PROFESSIONAL ENGINEER MATTHEW R. RAMOS CIVIL STATE OF CALIFORNIA

NOT FOR CONSTRUCTION

WALSH ENGINEERING
1108 GARDEN STREET, SUITE 202-204
SAN LUIS OBISPO, CA 93401
WALSHENGINEERING.NET
(805) 319-4948

The above drawings, specifications, ideas, designs and arrangements represented thereby are and shall remain property of the Architect (YM Architects), and no part thereof shall be copied, disclosed to others or used in connection with any other project other than the specific project for which they have been prepared and developed, without the written consent of the Architect (YM Architects). Visual contact with these drawings or specifications shall constitute conclusive evidence of acceptance of these restrictions. Written dimensions on these drawings shall have pre-over scaled dimensions. Contractors shall verify and be responsible for all dimensions and conditions on the job, and this office must be notified of any variations from the dimensions and conditions shown by these drawings. Shop details must be submitted to this office for approval before proceeding with fabrication.
2023 ©

S:\PROJECTS_ENG\2023\810_ICD SENIOR CENTER & APARTMENTS_BLACKSTONE AVE_FRESNO\DRAWINGS\GRADING.DWG
6/10/2024 11:32 AM

Y&M Architects

Y&M Architects
255 S. Santa Fe Ave, Suite 103
Los Angeles, CA 90012
Tel. 213 623 2107 Fax. 213 623 2108
www.ymarch.com

FRESNO SENIOR CENTER

Project. *

Integrated Community Development

Developer. 21031 Ventura Boulevard, Suite 200
Woodland Hills, CA 91364

Sheet Title	Date	Page
PRELIMINARY GRADING AND DRAINAGE PLAN	06.11.24	C1.0

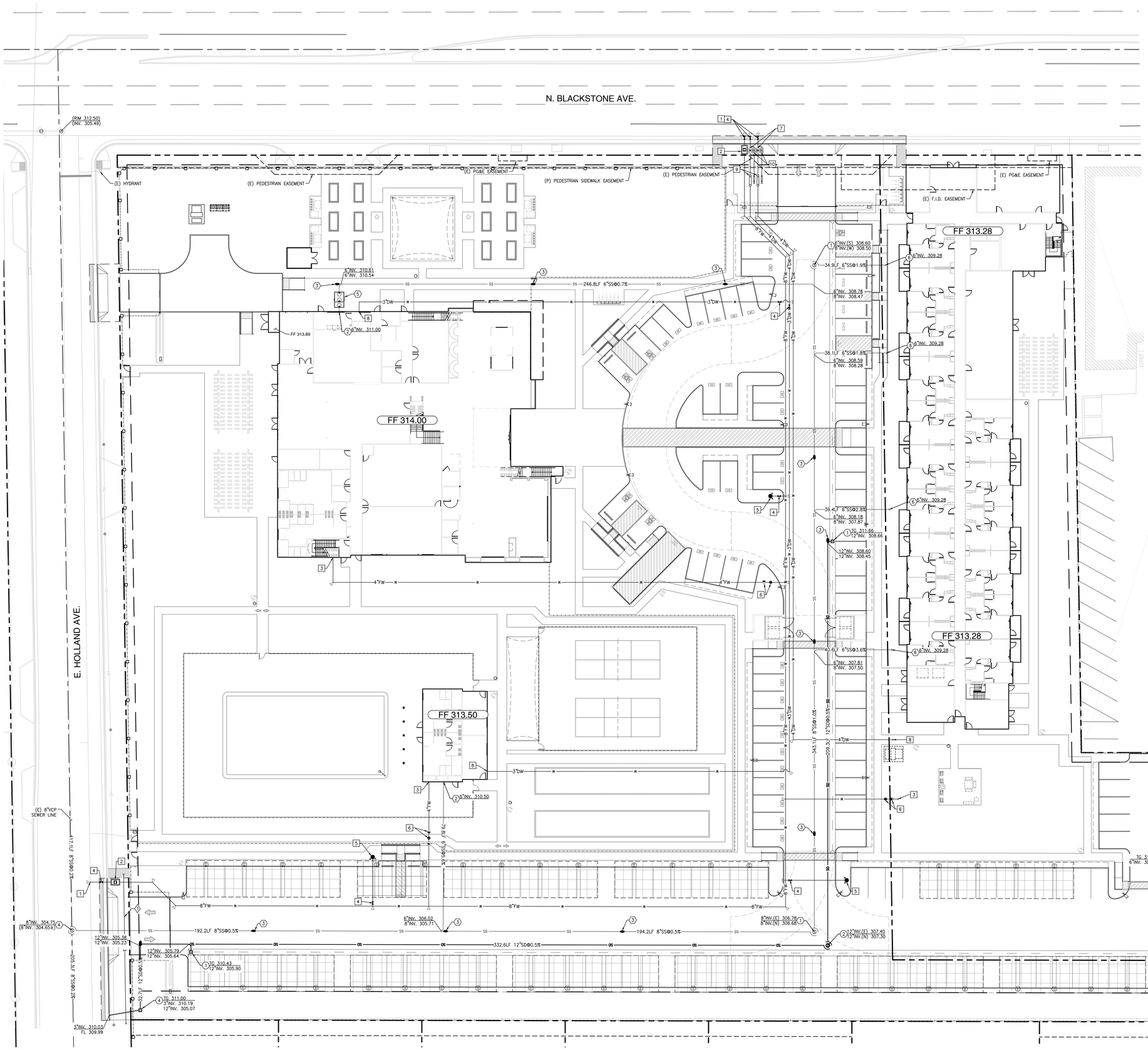

SANITARY SEWER KEY NOTES

1. PROPOSED 48" DIAMETER SANITARY SEWER MANHOLE PER CITY STANDARD S-3.
2. PROPOSED 6" SANITARY SEWER LATERAL PER CITY STANDARD S-1. SEE PLUMBING PLANS BY OTHERS FOR CONTINUATION WITHIN 5' OF THE BUILDING, INCLUDING CLEANOUT AT FACE OF BUILDING.
3. PROPOSED SANITARY SEWER CLEANOUT WITH TRAFFIC RATED COVER TO GRADE. INSTALL CHRISTY G-5 COVER, CONCRETE COLLAR AND 1/8 LONG RADIUS BEND. COLLAR SHALL BE 10" THICK AND EXTEND 10" AROUND THE COVER. COVER SHALL BE MARKED "SEWER".
4. PROPOSED POINT OF CONNECTION TO EXISTING 8" MAIN WITH MANHOLE PER CITY STANDARD S-3.
5. PROPOSED SAND AND GREASE TRAP.
6. STUB AND CAP PROPOSED SANITARY SEWER LINE AT LOCATION SHOWN TO FACILITATE FUTURE CONNECTION.

STORM DRAIN KEY NOTES

1. PROPOSED 24" DROP INLET WITH TRAFFIC RATED GRATE.
2. PROPOSED 48" DIAMETER MANHOLE PER FMFCD TYPE "A" STANDARD.
3. PROPOSED STORM DRAIN CLEANOUT WITH TRAFFIC RATED COVER TO GRADE.
4. PROPOSED 24"x24" CONCRETE CATCH BASIN WITH 2" DIAMETER WEEP HOLES IN THE BOTTOM TO ALLOW FOR INFILTRATION. CHRISTY BOX OR APPROVED EQUAL.

WATER KEY NOTES

1. PROPOSED POINT OF CONNECTION TO EXISTING WATER MAIN. CONNECT WITH MECHANICAL RESTRAINED JOINT, CONSISTENT WITH CITY STANDARD SPECIFICATION SECTION 21-15.5. WET-TIE CONNECTIONS TO EXISTING WATER MAIN TO BE PERFORMED BY CITY PERSONNEL.
2. PROPOSED SINGLE DETECTOR CHECK BACKFLOW DEVICE PER CITY STANDARD W-16. SET IN UNDERGROUND VAULT.
3. PROPOSED 4" LINE TO SERVE THE IN-BUILDING FIRE RISER. SEE FIRE SPRINKLER PLANS BY OTHERS FOR CONTINUATION WITHIN THE BUILDING. FIRE SPRINKLER DESIGNER TO VERIFY SIZING. NOTIFY ENGINEER OF ANY DISCREPANCIES.
4. PROPOSED GATE VALVE PER CITY STANDARD W-7.
5. PROPOSED FIRE HYDRANT PER CITY STANDARD W-3.
6. PROPOSED POST INDICATOR VALVE AND FIRE DEPARTMENT CONNECTION.
7. PROPOSED 4" DOMESTIC WATER METER.
8. PROPOSED WATER LINE TO PROVIDE DOMESTIC SERVICE. SIZE PER PLAN. SEE MECHANICAL PLANS BY OTHERS FOR CONTINUATION WITHIN 5' OF BUILDING. PLUMBING DESIGNER TO VERIFY SIZING. NOTIFY ENGINEER OF ANY DISCREPANCIES.
9. PROPOSED 4" REDUCED PRESSURE BACKFLOW DEVICE PER CITY STANDARD W-11.
10. PROPOSED 1" METER, REDUCED PRESSURE BACKFLOW DEVICE AND LATERAL TO PROVIDE IRRIGATION SERVICES. SEE LANDSCAPE PLANS BY OTHERS FOR CONTINUATION.

DRY UTILITY KEY NOTES

◇ PROVIDE SLEEVE UNDER THE PROPOSED DRIVEWAY APPROACH TO FACILITATE FUTURE UNDERGROUNDING OF THE EXISTING OVERHEAD LINES ALONG HOLLAND AVENUE. UNDERGROUNDING TO BE COMPLETED AS PART OF THE CITY'S SEPARATE BLACKSTONE AND HOLLAND IMPROVEMENT PROJECT. SIZE AND DEPTH OF SLEEVE SHALL BE COORDINATED WITH CITY STAFF.

GENERAL LEGEND

- EXISTING/PROPOSED CENTERLINE (℄)
- EXISTING PROPERTY LINE (EX. ℞)
- PROPOSED PROPERTY LINE (℞)
- PROPOSED SETBACK LINE
- EXISTING/PROPOSED EASEMENT
- PROPOSED SAWCUT
- GUTTER FLOWLINE
- PROPOSED CURB AND GUTTER
- PROPOSED SLOTTED CURB
- PROPOSED RETAINING WALL. HEIGHT PER PLAN.
- PROPOSED CONCRETE PAVEMENT/HARDSCAPE
- PROPOSED ASPHALT CONCRETE PAVEMENT
- PROPOSED GRAVEL
- PROPOSED PERVIOUS PAVEMENT
- DEEPENED FOUNDATION WALL. RETAINED HEIGHT PER PLAN. SEE STRUCTURAL PLANS BY OTHERS FOR CONSTRUCTION DETAILS.
- RAISED FOUNDATION WALL. RETAINED HEIGHT PER PLAN. SEE STRUCTURAL PLANS BY OTHERS FOR CONSTRUCTION DETAILS.

STORM DRAIN LEGEND:

- 50LF12"SD@0.5% — STORM DRAIN PIPE LENGTH, SIZE AND SLOPE (SD)
- PROPOSED SLOT/TRENCH DRAIN
- ENERGY DISSIPATOR
- DROP INLET
- MANHOLE
- CLEANOUT

SANITARY SEWER LEGEND:

- 75LF6"SS@2.0% — SANITARY SEWER PIPE LENGTH, SIZE AND SLOPE (SS)
- SANITARY SEWER MANHOLE (SSMH)
- SANITARY SEWER CLEANOUT TO GRADE (SSCO)
- SANITARY SEWER BACKWATER VALVE

WATER LEGEND:

- 6"DW — DOMESTIC WATER SERVICE AND SIZE (DW)
- 6"FW — FIRE WATER SERVICE AND SIZE (FW)
- GATE VALVE
- FIRE HYDRANT (FH)
- POST INDICATOR VALVE (PIV)
- FIRE DEPARTMENT CONNECTION (FDC)
- FIRE SERVICE DETECTOR CHECK PER CITY STD. W-16.
- BACKFLOW DEVICE FOR DOMESTIC SERVICE (RPZ)
- DOMESTIC WATER METER
- IRRIGATION METER (DESIGN BY OTHERS)
- RESTRAINT PER CITY STANDARDS W-31 THROUGH W-36.

DRY UTILITY LEGEND:

- G E OH JT — DRY UTILITY SERVICE
- PB — PROPOSED PULL BOX
- PROPOSED STREET LIGHT
- PROPOSED SITE LIGHT

THE CITY HAS PLANS TO IMPROVE EXISTING PUBLIC INFRASTRUCTURE ALONG BLACKSTONE AND HOLLAND AVENUES. OFFSITE IMPROVEMENTS FOR THE SUBJECT DEVELOPMENT SHALL BE COORDINATED WITH THE CITY'S SEPARATE PROJECT.

0 20' 40'
SCALE: 1" = 20'

811 Know what's below. Call811 before you dig.

NOTE: UTILITIES SHOWN WERE PLOTTED FROM OBSERVED EVIDENCE AND PLANS OBTAINED FROM UTILITY PROVIDERS. EXACT LOCATIONS AND QUANTITIES MAY VARY. THE CONTRACTOR SHALL CONTACT THE UTILITY LOCATING SERVICES PRIOR TO EXCAVATION AND USE EXTREME CAUTION WHEN EXPOSING UTILITIES. ANY DAMAGE TO EXISTING UTILITIES WILL BE THE SOLE RESPONSIBILITY OF THE CONTRACTOR.

REGISTERED PROFESSIONAL ENGINEER MATTHEW R. WALSH CIVIL STATE OF CALIFORNIA
NOT FOR CONSTRUCTION

WALSH ENGINEERING
1108 GARDEN STREET, SUITE 202-204
SAN LUIS OBISPO, CA 93401
WALSHENGINEERING.NET
(805) 319-4948

The above drawings, specifications, ideas, designs and arrangements represented thereby are and shall remain property of the Architect (Y&M Architects), and no part thereof shall be copied, disclosed to others or used in connection with any other project other than the specific project for which they have been prepared and developed, without the written consent of the Architect (Y&M Architects). Visual contact with these drawings or specifications shall constitute conclusive evidence of acceptance of these restrictions. Written dimensions on these drawings shall have pre-over scaled dimensions. Contractors shall verify and be responsible for all dimensions and conditions on the job, and this office must be notified of any variations from the dimensions and conditions shown by these drawings. Shop details must be submitted to this office for approval before proceeding with fabrication. 2023 ©

Y&M Architects
Y&M Architects
255 S. Santa Fe Ave, Suite 103
Los Angeles, CA 90012
Tel. 213 623 2107 Fax. 213 623 2108
www.ymarch.com

FRESNO SENIOR CENTER

Project. *

Integrated Community Development

Developer. 21031 Ventura Boulevard, Suite 200
Woodland Hills, CA 91364

PRELIMINARY UTILITY PLAN

Sheet Title

06.11.24

Date

C2.0

Page

S:\PROJECTS_ENG\2020810_ICD SENIOR CENTER & APARTMENTS_BLACKSTONE AVE_FRESNO\DRAWINGS\UTILITY.DWG
6/10/2024 11:33 AM

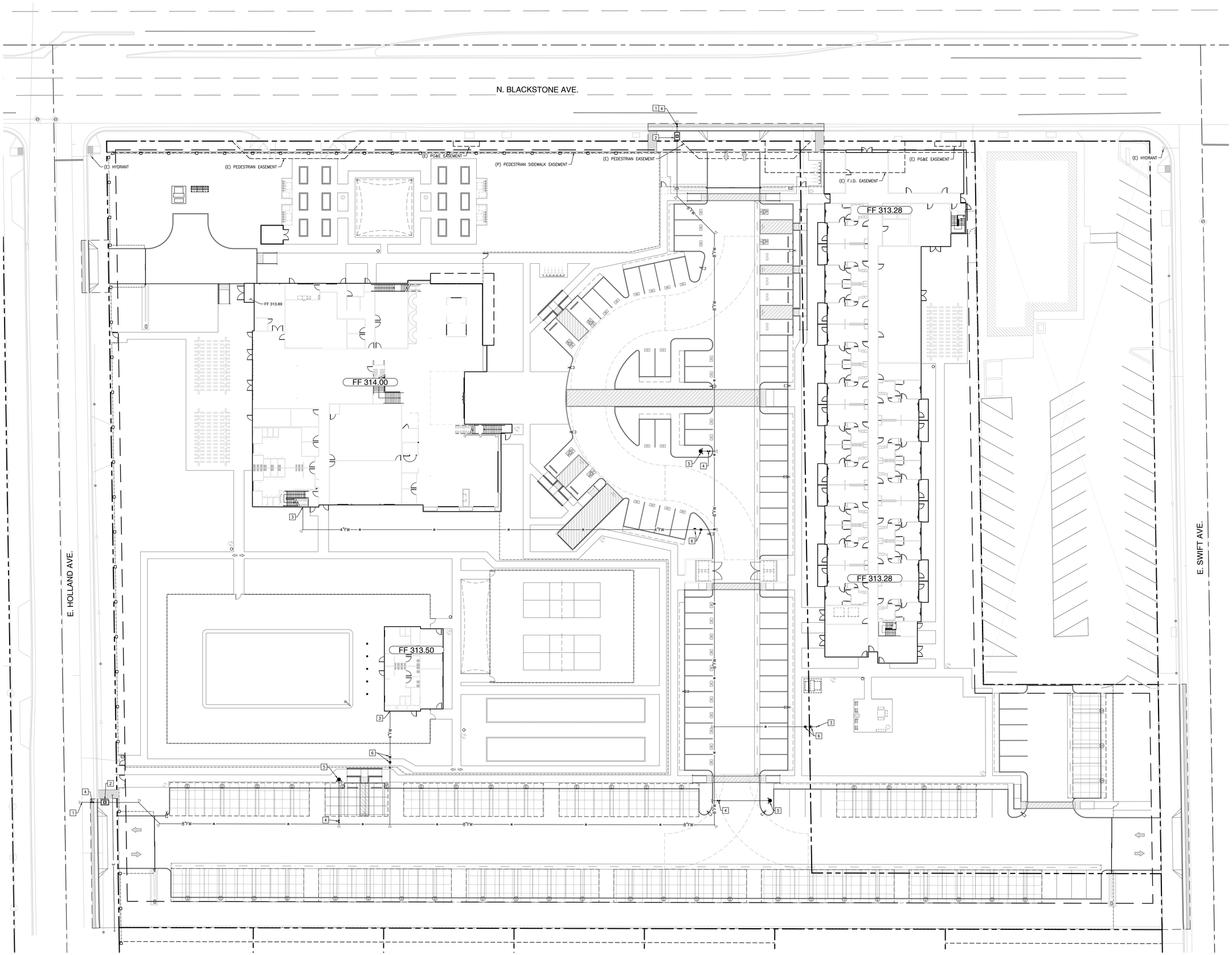

GENERAL LEGEND

- EXISTING/PROPOSED CENTERLINE (℄)
- EXISTING PROPERTY LINE (EX. ℞)
- PROPOSED PROPERTY LINE (℞)
- PROPOSED SETBACK LINE
- EXISTING/PROPOSED EASEMENT
- PROPOSED SAWCUT
- GUTTER FLOWLINE
- PROPOSED CURB AND GUTTER
- PROPOSED SLOTTED CURB
- PROPOSED RETAINING WALL. HEIGHT PER PLAN.
- PROPOSED CONCRETE PAVEMENT/HARDSCAPE
- PROPOSED ASPHALT CONCRETE PAVEMENT
- PROPOSED GRAVEL
- PROPOSED PERVIOUS PAVEMENT
- DEEPENED FOUNDATION WALL. RETAINED HEIGHT PER PLAN. SEE STRUCTURAL PLANS BY OTHERS FOR CONSTRUCTION DETAILS.
- RAISED FOUNDATION WALL. RETAINED HEIGHT PER PLAN. SEE STRUCTURAL PLANS BY OTHERS FOR CONSTRUCTION DETAILS.

WATER LEGEND:

- 6"DW — DOMESTIC WATER SERVICE AND SIZE (DW)
- 8"FW — FIRE WATER SERVICE AND SIZE (FW)
- GATE VALVE
- FIRE HYDRANT (FH)
- POST INDICATOR VALVE (PIV)
- FIRE DEPARTMENT CONNECTION (FDC)
- FIRE SERVICE DETECTOR CHECK PER CITY STD. W-16.
- BACKFLOW DEVICE FOR DOMESTIC SERVICE (RPZ)
- DOMESTIC WATER METER
- IRRIGATION METER (DESIGN BY OTHERS)
- RESTRAINT PER CITY STANDARDS W-31 THROUGH W-36.

WATER KEY NOTES

1. PROPOSED POINT OF CONNECTION TO EXISTING WATER MAIN. CONNECT WITH MECHANICAL RESTRAINED JOINT, CONSISTENT WITH CITY STANDARD SPECIFICATION SECTION 21-15.5. WET-TIE CONNECTIONS TO EXISTING WATER MAIN TO BE PERFORMED BY CITY PERSONNEL.
2. PROPOSED SINGLE DETECTOR CHECK BACKFLOW DEVICE PER CITY STANDARD W-16. SET IN UNDERGROUND VAULT.
3. PROPOSED 4" LINE TO SERVE THE IN-BUILDING FIRE RISER. SEE FIRE SPRINKLER PLANS BY OTHERS FOR CONTINUATION WITHIN THE BUILDING. FIRE SPRINKLER DESIGNER TO VERIFY SIZING. NOTIFY ENGINEER OF ANY DISCREPANCIES.
4. PROPOSED GATE VALVE PER CITY STANDARD W-7.
5. PROPOSED FIRE HYDRANT PER CITY STANDARD W-3.
6. PROPOSED POST INDICATOR VALVE AND FIRE DEPARTMENT CONNECTION.

0 20' 40'
SCALE: 1" = 20'

811 Know what's below. Call811 before you dig.

NOTE: UTILITIES SHOWN WERE PLOTTED FROM OBSERVED EVIDENCE AND PLANS OBTAINED FROM UTILITY PROVIDERS. EXACT LOCATIONS AND QUANTITIES MAY VARY. THE CONTRACTOR SHALL CALL 811 FOR UTILITY LOCATING SERVICES PRIOR TO EXCAVATION AND USE EXTREME CAUTION WHEN EXPOSING UTILITIES. ANY DAMAGE TO EXISTING UTILITIES WILL BE THE SOLE RESPONSIBILITY OF THE CONTRACTOR.

REGISTERED PROFESSIONAL ENGINEER MATTHEW R. WALSH CIVIL STATE OF CALIFORNIA
NOT FOR CONSTRUCTION

WALSH ENGINEERING
1108 GARDEN STREET, SUITE 202-204
SAN LUIS OBISPO, CA 93401
WALSHENGINEERING.NET
(805) 319-4948

The above drawings, specifications, ideas, designs and arrangements represented thereby are and shall remain property of the Architect (Y&M Architects), and no part thereof shall be copied, disclosed to others or used in connection with any other project other than the specific project for which they have been prepared and developed, without the written consent of the Architect (Y&M Architects). Visual contact with these drawings or specifications shall constitute conclusive evidence of acceptance of these restrictions. Written dimensions on these drawings shall have pre-over scaled dimensions. Contractors shall verify and be responsible for all dimensions and conditions on the job, and this office must be notified of any variations from the dimensions and conditions shown by these drawings. Shop details must be submitted to this office for approval before proceeding with fabrication. 2023 ©

S:\PROJECTS_ENG\2022\910_ICD SENIOR CENTER & APARTMENTS_BLACKSTONE AVE_FRSNO\DRAWINGS\UTILITY.DWG
6/10/2024 11:34 AM

Y&M Architects
Y&M Architects
255 S. Santa Fe Ave, Suite 103
Los Angeles, CA 90012
Tel. 213 623 2107 Fax. 213 623 2108
www.ymarch.com

FRESNO SENIOR CENTER

Project. *

Integrated Community Development

Developer. 21031 Ventura Boulevard, Suite 200
Woodland Hills, CA 91364

PRELIMINARY PRIVATE UNDERGROUND FIRE MAIN PLAN

Sheet Title

06.11.24

Date

C3.0

Page

GENERAL NOTES

1. THE DRAWINGS DESCRIBE THE SYSTEMS. FURNISH ALL MATERIAL AND DO ALL WORK REQUIRED AS INDICATED ON THE DRAWINGS AND SPECIFICATIONS UNLESS OTHERWISE NOTED. FURNISH AND INSTALL ALL NEW MATERIAL AND EQUIPMENT AS REQUIRED TO PRODUCE A COMPLETE OPERATING SYSTEM. ALL WORK SHALL COMPLY WITH 2020 EDITION OF THE ELECTRICAL CODE, BASED ON 2022 CALIFORNIA ELECTRICAL (BASED ON 2020 NEC) CODE.

2. CODES AND PERMITS: ALL ELECTRICAL EQUIPMENT, INSTALLATION, ETC., SHALL CONFORM TO 2022 CITY CODES INCLUDING CALIFORNIA TITLE 24. CONSTRUCTION SHALL COMPLY WITH THE FOLLOWING PARTS OF TITLE 24, CALIFORNIA CODE OF REGULATIONS (CCR):

   TITLE 24, PART 2, CCR (2022 CALIFORNIA BUILDING CODE W/AMENDMENTS)

   TITLE 24, PART 3, CCR (2022 CALIFORNIA ELECTRICAL CODE W/AMENDMENTS)

   TITLE 24, PART 4, CCR (2022 CALIFORNIA MECHANICAL CODE W/AMENDMENTS)

   TITLE 24, PART 5, CCR (2022 CALIFORNIA PLUMBING CODE W/AMENDMENTS)

   TITLE 24, PART 9, CCR (2022 CALIFORNIA FIRE CODE W/AMENDMENTS)

   (2022 CALIFORNIA GREEN BUILDINGS STANDARDS CODES) CONTRACTOR SHALL OBTAIN AND PAY FOR ALL PERMITS & INSPECTIONS.

3. PROVIDE AND INSTALL ALL MATERIALS IN CONFORMANCE WITH THE 2020 EDITION OF THE ELECTRICAL CODE, BASED ON 2022 CALIFORNIA ELECTRICAL CODE (BASED ON 2020 NEC) WITH LOCAL CITY AMENDMENTS, ORDINANCES AND LOCAL AUTHORITIES HAVING JURISDICTION. INSTALL ALL EQUIPMENT IN ACCORDANCE WITH THE REQUIREMENTS OF THE INSPECTING AUTHORITY AND THE MANUFACTURER'S RECOMMENDATIONS.

4. FOR PURPOSES OF CLEARNESS AND LEGIBILITY, THE ELECTRICAL DRAWINGS ARE ESSENTIALLY DIAGRAMMATIC. THE SIZE AND LOCATION OF EQUIPMENT IS SHOWN TO SCALE WHEREVER POSSIBLE. THE CONTRACTOR SHALL VERIFY ALL CONDITIONS.

5. THE SYMBOLS DESIGNATING CONDUIT SIZES AND QUANTITIES OF BRANCH CIRCUIT WIRING DO NOT INCLUDE THE EQUIPMENT GROUNDING CONDUCTOR REQUIRED. INSTALL REQUIRED EQUIPMENT GROUNDING CONDUCTOR IN ALL CONDUITS, SIZE PER CEC 250-122, EQUIPMENT GROUNDING CONDUCTOR SHALL BE GREEN.

6. BEFORE SUBMITTING BID, BECOME THOROUGHLY FAMILIAR WITH ACTUAL EXISTING CONDITIONS AT THE BUILDING. THE INTENT OF THE WORK IS SHOWN ON THE DRAWINGS AND DESCRIBED HEREINAFTER. BY THE ACT OF SUBMITTING A BID PROPOSAL FOR WORK, THE CONTRACTOR SHALL BE DEEMED TO HAVE MADE SUCH A STUDY AND EXAMINATION AND TO ACCEPT ALL CONDITIONS PRESENT AT THE SITE. NO REQUEST FOR ADDITIONAL PAYMENT SHALL BE CONSIDERED AS VALID, DUE TO FAILURE TO ALLOW FOR CONDITIONS WHICH MAY EXIST.

7. REFER TO ALL DRAWINGS FOR ADDITIONAL INFORMATION, EXACT EQUIPMENT LOCATION, MOUNTING HEIGHTS, MOUNTING REQUIREMENTS AND MAKE ALL FINAL ELECTRICAL CONNECTIONS TO ALL ELECTRICAL EQUIPMENT AS REQUIRED.

8. LOCATIONS OF CEILING MOUNTED DEVICES SHOWN ON THE ARCHITECTURAL DRAWINGS TAKE PRECEDENCE OVER THOSE SHOWN ON THE ELECTRICAL DRAWINGS. CONTRACTOR TO COORDINATE WITH OTHER TRADES FOR ADDITIONAL INFORMATION, EQUIPMENT LOCATION, MOUNTING HEIGHTS, MOUNTING REQUIREMENTS AND MAKE FINAL CONNECTIONS TO ALL ELECTRICAL EQUIPMENT.

9. CONTRACTOR'S BID SHALL BE BASED ON ALL WORK SHOWN ON THE PLANS AND SPECIFICATIONS. ALL PREMIUM TIME COSTS REQUIRED SHALL BE INCLUDED IN HIS BID. IF CONTRACTOR PROPOSES TO SUBSTITUTE FOR EQUIPMENT SPECIFIED, HE SHALL SUBMIT HIS REQUEST FOR CONSIDERATION TO THE OWNER AND ENGINEER PRIOR TO THE BID, IN WRITING. ALL SUBSTITUTIONS MUST BE REVIEWED BY THE ENGINEER. SUCH REVIEW SHALL NOT RELIEVE THE CONTRACTOR FROM COMPLYING WITH THE REQUIREMENTS OF THE DRAWINGS AND SPECIFICATIONS. THE CONTRACTOR SHALL BE RESPONSIBLE AT HIS OWN EXPENSE FOR ANY CHANGES RESULTING FROM HIS PROPOSED SUBSTITUTIONS WHICH MAY AFFECT OTHER PARTS OF HIS OWN WORK OR THE WORK OF OTHER CONTRACTORS.

10. CONTRACTOR TO PROVIDE TEMPORARY ELECTRICAL SERVICE SUITABLE TO CONDUCT CONSTRUCTION WORK.

11. REFER TO REFLECTED CEILING PLAN FOR EXACT LOCATION OF ALL LIGHTING FIXTURES, SMOKE DETECTORS AND FIRE ALARM DEVICES.

12. ALL MATERIALS AND EQUIPMENT SHALL BE NEW AND SHALL BEAR THE UNDERWRITERS LABEL (UL) AND BE INSTALLED IN THE MANNER FOR WHICH THEY ARE DESIGNED AND APPROVED.

13. ANY SUBSTITUTIONS OF SPECIFIED MATERIALS REQUIRE WRITTEN NOTIFICATION BY THE CONTRACTOR AND FORMAL APPROVAL BY OWNER REPRESENTATIVE AND/OR THE ENGINEER.

14. SEAL ALL NEW CONDUIT PENETRATIONS THROUGH FIRE RATED WALLS, CEILINGS, FLOORS, ETC., TO MAINTAIN EXISTING FIRE RATING CONDITIONS. FURNISH AND INSTALL FIRE RATED ENCLOSURES FOR ALL EQUIPMENT PENETRATING INTO FIRE RATED ENVELOPES, SPACES, ETC.

15. WHENEVER CONDUITS PENETRATE A PERIMETER WALL, IT IS TO BE SEALED IN AN APPROVED MANNER.

16. PROVIDE AN ENCLOSURE OF EQUAL FIRE RESISTANT RATING AROUND ALL FIXTURES AND EQUIPMENT INSTALLED IN OR PENETRATING THROUGH FIRE RATED SEPARATIONS.

17. OUTLET BOXES AND PANELS INSTALLED IN FIRE RATED WALLS AND CEILINGS SHALL NOT EXCEED 100 SQUARE INCHES FOR ANY 100 SQUARE FEET OF WALL OR CEILING AREA. INDIVIDUAL OUTLET BOXES OR FIXTURES SHALL BE STEEL AND NOT GREATER THAN 16 SQUARE INCHES.

18. ALL ROOF PENETRATIONS SHALL BE THROUGH ROOF CURB.

19. ISOLATED EQUIPMENT GROUNDING CONDUCTOR INSULATION SHALL BE GREEN WITH A YELLOW STRIPE. EQUIPMENT GROUNDING CONDUCTOR SHALL BE GREEN.

20. ALL DEVICES INSTALLED OUTSIDE OR SUBJECT TO WATER SPRAY SHALL BE APPROVED FOR WET LOCATION. ALL DEVICES SUBJECT TO VAPORS, STEAM AND MOISTURE SHALL BE APPROVED FOR DAMP LOCATION. FOR WALL MOUNTED OUTLETS EXACT LOCATION AND MOUNTING HEIGHTS, REFER TO ARCHITECTURAL DRAWINGS INTERIOR ELEVATIONS IF PROVIDED.

21. INSTALL "GFI" GROUND FAULT INTERRUPTER RECEPTACLES WITHIN 6 FEET OF A SINK OR ANY AREA SUBJECT TO WATER SPRAY.

22. INSTALL "GFI" GROUND FAULT INTERRUPTER RECEPTACLES WITH WEATHERPROOF COVER ON ROOF WITHIN 25 FEET OF "HVAC" EQUIPMENT, MOUNT RECEPTACLE ON UNISTRUT SUPPORT.

24. APPLY TO AND WITHIN ALL DWELLING UNIT APARTMENTS ALL 15A AND 20A RECEPTACLES SHALL BE TAMPER RESISTANT TYPE RECEPTACLES PER CEC 406.11.

25. DUPLEX CONVENIENCE WITH ISOLATED GROUND TYPE SHALL BE WHITE WITH ORANGE TRIANGLE MARKING.

26. RECEPTACLE COVER PLATES SHALL BE LABELED WITH A LABEL MAKER SHOWING PANEL NAME AND CIRCUIT NUMBER.

27. PROVIDE SUPPORT FOR ALL LIGHTING FIXTURES AND ALL ELECTRICAL EQUIPMENT TO COMPLY WITH THE SEISMIC REQUIREMENTS OF THE CURRENT CALIFORNIA BUILDING AND ELECTRICAL CODES AND LOCAL AUTHORITIES.

28. ALL LIGHT FIXTURES SHALL BE FURNISHED AND INSTALLED COMPLETE WITH ALL NECESSARY HARDWARE, FITTINGS LAMPS AND BALLAST. BALLASTS HARMONICS MAY NOT EXCEED THE TOTAL HARMONIC DISTORTION ALLOWABLE BY THE LOCAL ELECTRICAL UTILITY COMPANY. LAMPS SHALL HAVE A CRI RATING OF 80 OR HIGHER. BALLASTS AND FIXTURES SHALL BE C.E.C. CERTIFIED.

29. PROVIDE PENDANT MOUNTED LIGHTING FIXTURES WITH STEMS OF SUFFICIENT LENGTH TO CLEAR PIPING AND VENTILATING DUCTS. COORDINATE LOCATION OF LIGHTING FIXTURES WITH DUCTS, PIPING AND EQUIPMENT PRIOR TO INSTALLATION OF CONDUITS AND LIGHTING FIXTURES.

30. FUSES FOR MOTOR PROTECTION SHALL BE PER NAMEPLATE RATING OF EQUIPMENT SPECIFIED.MANUAL MOTOR STARTERS FOR FRACTIONAL HORSEPOWER MOTORS SHALL BE SQUARE 'D' WITH OVERLOAD PROTECTION. PROVIDE OVERLOAD PROTECTION IN EACH PHASE FOR 3-PHASE MOTORS.

31. PROVIDE NAMEPLATES FOR ALL PANELBOARDS, DISTRIBUTION BOARDS, DISCONNECTS TRANSFORMERS, MOTOR STARTERS, TERMINAL CABINETS AND ALL ELECTRICAL EQUIPMENT IDENTIFIED BY NAME ON DRAWINGS.

32. BUILDING SERVICE ENTRANCE GROUNDING SYSTEM NOT EXCEED EARTH RESISTANCE OF 5 OHMS.

33. PROVIDE ALL ROUGH-IN WORK AND MAKE FINAL CONNECTIONS REQUIRED TO ALL EQUIPMENT. VERIFY EXACT POINT OF CONNECTION AND TYPE OF RECEPTACLES REQUIRED WITH RESPECTIVE EQUIPMENT SUPPLIER.

34. IN ADDITION TO JUNCTION BOXES INDICATED ON DRAWINGS, INSTALL JUNCTION BOXES AND PULL BOXES FOR CABLE SPLICES, CABLE PULLING AND CONNECTIONS NECESSARY FOR THE INSTALLATION OF A COMPLETE OPERATING SYSTEM. JUNCTION BOXES AND PULL BOXES SHALL BE ACCESSIBLE. LABEL JUNCTION BOXES AND PULL BOXES WITH APPROPRIATE DESIGNATION, MAXIMUM (3) 90° BENDS.

35. INSTALLATION OF 600 VOLTS CONDUCTORS, SHALL BE CONTINUOUS BETWEEN OUTLETS OR JUNCTION BOXES. MAKE SPLICES IN OUTLET BOXES, PULLBOXES, GUTTERS AND/OR PANELBOARD. DO NOT SPLICE PANELBOARD FEEDERS.

36. MAIN FEEDER CONDUITS SHALL BE RIGID METAL CONDUITS UNLESS OTHERWISE NOTED. STEEL FLEXIBLE CONDUITS FOR SHORT EQUIPMENT CONNECTIONS, EQUIPMENT CONNECTIONS SUBJECT TO VIBRATIONS AND EQUIPMENT LOCATED OUTSIDE OR SUBJECT TO WATER SPRAY MAKE CONNECTIONS WITH LIQUID-TIGHT CONDUIT AND WEATHERPROOF COMPONENTS, LENGTH IS LIMITED TO SIX FEET, PROVIDE EQUIPMENT GROUNDING CONDUCTOR SIZE PER 2022 CEC TABLE 250-122.

37. PAINT ALL NEW EXPOSED ELECTRICAL RACEWAYS, CABINETS, ENCLOSURES AND FITTINGS TO MATCH ADJACENT FINISHES. EXPOSED CONDUIT RUNS SHALL BE INSTALLED AS CLOSED AS POSSIBLE TO THE CEILING.

38. CONDUIT STUBBED-OUTS AND CONDUIT STUBBED-UPS SHALL BE PROVIDED WITH BUSHING ON ENDS.

39. PROVIDE PULL STRING IN EMPTY CONDUITS INSTALLED AS PART OF THIS PROJECT.

40. UNLESS OTHERWISE NOTED PROVIDE COPPER CONDUCTORS, MINIMUM SIZE #12 AWG. PROVIDE SOLID CONDUCTORS #10 AWG AND SMALLER UNLESS OTHERWISE NOTED. PROVIDE STRANDED CONDUCTORS #8 AWG AND LARGER UNLESS OTHERWISE NOTED. USE CONDUCTORS WITH THHN/THWN 600 VOLTS INSULATION FOR SIZES #6 AWG AND SMALLER, UNLESS OTHERWISE NOTED. CONDUCTORS #4 AWG AND LARGER SHALL BE THAW INSULATION, UNLESS OTHERWISE NOTED.

41. DELIVER ALL CONDUCTORS TO THE JOB SITE IN ORIGINAL UNBROKEN CARTON OR REEL, PROPERLY TAGGED WITH U.L. LABEL, SIZE, MANUFACTURER'S TRADE NAME AND THE DATE MANUFACTURED.

42. IT IS THE RESPONSIBILITY OF THE CONTRACTOR TO MAINTAIN WORK AREA CLEAR OF DEBRIS ON DAILY BASIS DURING CONSTRUCTION.

43. ALL UTILITIES HOOKUPS REQUIRED DURING OFF HOURS WILL BE PERFORMED BY THE CONTRACTOR AT NO ADDITIONAL COST.

44. NO PIPING, DUCTS OR EQUIPMENT FOREIGN TO ELECTRICAL EQUIPMENT SHALL BE PERMITTED TO BE LOCATED WITHIN DEDICATED WORKING SPACE OF EQUIPMENT, INCLUDING THE DEDICATED SPACE BETWEEN THE TOP OF EQUIPMENT TO THE STRUCTURAL CEILING ABOVE. ALL FOREIGN INSTALLATION WITHIN THE SPACE (I.E. FIRE SPRINKLER, ETC) SHALL BE INSTALLED IN ACCORDANCE WITH NEC 11026(F)(1)(c).

45. IDENTIFY DATA & COMMUNICATION PULL ROPE OR CABLE AT BOTH ENDS DESIGNATING OPPOSITE TERMINATIONS.

46. USE PLASTIC COATED SELF-STICKING MARKERS SUCH AS THOMAS & BETTS E-Z CODE FOR IDENTIFICATION OF CONDUCTORS AND METAL EDGE BANDED PAPER TAGS ON PULL ROPES.

47. PROVIDE A TYPE WRITTEN PANELBOARD DIRECTORY

48. FIRE ALARM SYSTEM SHALL BE DESIGN BUILD.

49. ALL RECEPTACLES SHALL BE INSTALLED WITH GROUND PLUG UP.

50. TELEPHONE/LLCP DATA SYSTEM:

   A. ALL CONDUIT, TELEPHONE/DATA/TV CABLING SHALL BE INSTALLED IN ACCORDANCE WITH LOCAL UTILITY COMPANIES AND PER CITY OF REGULATIONS, REQUIREMENTS AND STANDARDS.

52. TELEPHONE EQUIPMENT ROOM:

   A. ACCESS TO THE LOCAL TELEPHONE COMPANY'S POINT OF PRESENCE OFF PREMISE SHALL BE PROVIDE AND COMPLETED AT A MINIMUM OF SIX (6) WEEKS PRIOR TO THE OPENING DATE. THIS REQUIRES AT LEAST TWO (2) FOUR (4) INCH CONDUIT FROM THIS POINT OF PRESENCE TO THE TELEPHONE EQUIPMENT ROOM NEAR THE WALL WITH THE PLYWOOD. THE LOCAL TELEPHONE COMPANY CAN INSTRUCT PROPERTY OF ITS REQUIREMENTS FOR THE ABOVE ACCESS.

53. TELEPHONE EQUIPMENT POWER:

   A. SINCE THE TELEPHONE SYSTEM IS A COMPUTER-CONTROLLED SYSTEM, SPECIAL ATTENTION SHALL BE PAID TO THE POWER SOURCE. THE TELEPHONE EQUIPMENT REQUIRES A MINIMUM OF TWO (4) DEDICATED DUPLEX OUTLETS WITH A MINIMUM RATING OF 120VAC AT 20 AMPS AS SHOWN ON PLANS.

54. TESTING OF THE EXIT SIGNS AND EMERGENCY EGRESS ILLUMINATION SHALL REQUIRE DISCONNECTING THE PRIMARY POWER TO THE BUILDING. PLAN ACCORDINGLY.

55. A LIGHTING SCHEDULE SHALL BE SUBMITTED TO HOMEOWNERS OR OCCUPANTS AT THE TIME OF OCCUPANCY. THIS LIGHTING SCHEDULE SHOULD DESCRIBE ALL INTERIOR LUMINAIRES AND LAMPS INSTALLED IN THE HOME. NOTE THIS ON THE PLANS.

56. IN BATHROOMS, LAUNDRY ROOMS, AND UTILITY ROOMS, AT LEAST ONE LUMINAIRE IN EACH OF THESE SPACES SHALL BE CONTROLLED BY A VACANCY SENSOR.

57. ALL OUTDOOR LIGHTING SHALL BE CONTROLLED BY A MANUAL ON AND OFF SWITCH THAT DOES NOT OVERRIDE TO ON AND ONE OF THE FOLLOWING: CONTROLLED BY PHOTOCELL AND MOTION SENSOR, PHOTO CONTROL AND AUTOMATIC SWITCH CONTROL, ASTRONOMICAll TIME CLOCK, OR ENERGY MANAGEMENT CONTROL SYSTEM.

COMMON AREA LIGHTING FIXTURE SCHEDULE

TYPE	SYMBOL	MOUNTING	LAMP	DESCRIPTION	MANUFACTURER
A		RECESSED MOUNTED	9W LED	4" ROUND LED SLIM DISK	ELITE LED LIGHTING RL475-550L-DIMTR-120-305-90-WH
B		CEILING OR WALL MOUNTED	36W LED	4' LED WALL/STAIRWELL BRACKET SERIES LOCATED AT THE STAIRWELLS.	ORACLE LIGHTING 4-OSL-LED-4000L-DIM10-MVOLT-40K-85-FBF
BE		CEILING OR WALL MOUNTED	36W LED	SAME AS TYPE "B" FIXTURE EXCEPT CONNECTED TO A 90 MINUTES EMERGENCY SUPPLY.	ORACLE LIGHTING 4-OSL-LED-4000L-DIM10-MVOLT-40K-85-FBF
C		SURFACE MOUNTED	36W LED	4' LED WALL/STAIRWELL BRACKET SERIES LOCATED AT THE UTILITY ROOM.	ORACLE LIGHTING 4-OSL-LED-4000L-DIM10-MVOLT-40K-85-FBF
CE		SURFACE MOUNTED	36W LED	SAME AS TYPE "C" FIXTURE EXCEPT CONNECTED TO A 90 MINUTES EMERGENCY SUPPLY.	ORACLE LIGHTING 4-OSL-LED-4000L-DIM10-MVOLT-40K-85-FBF
D		SURFACE MOUNTED	33W LED	2' X 4' ARCHITECTURAL SHALLOW PLENUM RECESSED LED TROFFER.	ORACLE LIGHTING 24-OVHP-LED-4000L-DIM10-MVOLT-40K-85
DE		SURFACE MOUNTED	33W LED	SAME AS TYPE "D" FIXTURE EXCEPT CONNECTED TO A 90 MINUTES EMERGENCY SUPPLY.	ORACLE LIGHTING 24-OVHP-LED-4000L-DIM10-MVOLT-40K-85
E		SURFACE MOUNTED	22W LED	2' X 2' ARCHITECTURAL SHALLOW PLENUM RECESSED LED TROFFER.	ORACLE LIGHTING 22-OVHP-LED-3000L-DIM10-MVOLT-35K-85
EE		SURFACE MOUNTED	22W LED	SAME AS TYPE "E" FIXTURE EXCEPT CONNECTED TO A 90 MINUTES EMERGENCY SUPPLY.	ORACLE LIGHTING 22-OVHP-LED-3000L-DIM10-MVOLT-35K-85
F		SURFACE MOUNTED	26W LED	WALL MOUNTED VANITY LIGHT.	ACCESS LIGHTING 62532LEDD-BS/OPL (OR EQUAL)
G		SURFACE MOUNTED	5W LED	SLEEK PROFILE LED STEP LIGHT	ELITE LED LIGHTING SE111-LED-30K-WH
EX		UNIVERSAL MOUNT	LED	EXIT SIGN, UL924 DAMP LISTED DUAL CIRCUIT OPTION AND CONNECTED TO A 90 MINUTES EMERGENCY SUPPLY.	ELITE ELX603GW

LIGHTING FIXTURES SHALL BE TITLE-24 COMPLAINT.

ELECTRICAL SYMBOLS LEGEND

SYMBOL	DESCRIPTION
COMM 1A	SIGNAL SYSTEM COMMUNICATION BACKBOARD DESIGNATION
	REFERENCE NOTE DESIGNATION
M	METERING AND TEST BLOCKS AS REQUIRED BY THE UTILITY SERVING AGENCY
	CIRCUIT BREAKER
	GROUND
3	MOTOR (NUMBER INSIDE SYMBOL DESIGNATES HP OF MOTOR)

NOTE: FOR ADDITIONAL SYSTEM SYMBOLS AND WIRING LEGEND REFER TO SITE PLANS AND RISER DIAGRAMS

TERMS AND ABBREVIATIONS

ABBREVIATION	DESCRIPTION
@	AT
A	AMPERES
A.F.F.	ABOVE FINISHED FLOOR
APPARATUS	INDICATES SWITCHGEARS, DISTRIBUTION BOARDS, TRANSFORMERS, ETC.
AS	AMP SWITCH
BKBD	BACKBOARD
CATV	CABLE TELEVISION
CB	CIRCUIT BREAKER
CKT	CIRCUIT
C.O.	CONDUIT ONLY
Ø	PHASE OR DIAMETER
DN	DOWN
EC	ELECTRICAL CONTRACTOR
ELEC	ELECTRIC OR ELECTRICAL
EM.	EMERGENCY
EQUIP.	EQUIPMENT
EWH	ELECTRIC WATER HEATER (KW RATING AS SHOWN)
EXIST.	EXISTING
FA	FIRE ALARM
FDR.	FEEDER, INDICATES CONDUIT AND CONDUCTORS
FLA	FULL LOAD AMPERES
FLUOR.	FLUORESCENT
GC	GENERAL CONTRACTOR
GFCI	GROUND FAULT CIRCUIT INTERRUPTER
AFCI	AFCI FAULT CIRCUIT INTERRUPTER
GND	GROUND
HORIZ.	HORIZONTAL
HP	HORSEPOWER
HTR	HEATER
HVAC	HEATING, VENTILATING AND AIR CONDITIONING
I.G.	ISOLATED GROUND
INCAND.	INCANDESCENT
IND.	INDICATED
INT.	INTERIOR
JB	JUNCTION BOX
KVA	KILOVOLT AMPERES
KW	KILOWATT
KWH	KILOWATT HOUR
LCL	LONG CONTINUOUS LOAD
LOC.	LOCATION
LTG	LIGHTING
MATV	MASTER ANTENNA TELEVISION
MECH	MECHANICAL
MFR.	MANUFACTURER
MH	MOUNTING HEIGHT
MIN	MINIMUM
MTD	MOUNTED
MTG	MOUNTING
NA	NOT APPLICABLE
NF	NON FUSIBLE
N.L.	NIGHT LIGHT
N.T.S.	NOT TO SCALE
PA	PUBLIC ADDRESS
PB	PULLBOX
PNL	PANEL
PROVIDE	INDICATED ELECTRICAL CONTRACTOR TO FURNISH & INSTALL
PWR.	POWER
REC. OR RECEPT.	RECEPTACLE
REQ'D	REQUIRED
RM	ROOM
SCHED.	SCHEDULE
SPKR	SPEAKER
SQ. FT.	SQUARE FEET
STD.	STANDARD
SW.	SWITCH
SWBD	SWITCHBOARD
SYS.	SYSTEM
TEL	TELEPHONE
TRANSF.	TRANSFORMER
TTB	TELEPHONE TERMINAL BACKBOARD
TYP.	TYPICAL
U.G.	UNDERGROUND
U.O.N.	UNLESS OTHERWISE NOTED
V	VOLT
VA	VOLT AMPERES
VD	VOLTAGE DROP
VERT.	VERTICAL
WH	WATER HEATER (GAS SUPPLIED)
W	WATTS OR WIRE OR WIDE
WP	WEATHERPROOF

ELECTRICAL SYMBOLS LEGEND

SYMBOL	DESCRIPTION
	EXIT LIGHT FIXTURE, WALL MOUNTED
	EXIT LIGHT FIXTURE, CEILING OR PENDANT MOUNTED
	SPECIAL OUTLET AS NOTED
	GROUNDED TYPE DUPLEX RECEPTACLE, WALL MOUNTED
IG	ISOLATED GROUND TYPE DUPLEX RECEPTACLE, WALL MOUNTED
GFCI	GROUND FAULT INTERRUPTED TYPE DUPLEX RECEPTACLE, WALL MOUNTED
EDF	GROUNDED TYPE DUPLEX RECEPTACLE, WALL MOUNTED FOR ELECTRIC DRINKING FOUNTAIN
WR	GROUNDED TYPE DUPLEX RECEPTACLE, WALL MOUNTED FOR WASHER
DR	ELECTRIC DRYER +15" A.F.F. - 208V, 30A, ,3W, 2P GROUNDED RECEPTACLE (U.O.N.)
REF	GROUNDED TYPE DUPLEX RECEPTACLE, WALL MOUNTED FOR REFRIGERATOR
	GROUNDED TYPE DUPLEX RECEPTACLE (HALF SWITCH), WALL MOUNTED
	DOUBLE DUPLEX CONVENIENCE OUTLET, WALL MOUNTED UNLESS OTHERWISE NOTED
	GROUNDED TYPE DUPLEX RECEPTACLE, FLOOR MOUNTED
	FLUSH IN FLOOR GROUNDED TYPE DOUBLE DUPLEX CONVENIENCE OUTLET, WITH BRASS COVERPLATE
	DUPLEX CONVENIENCE OUTLET, FLUSH IN CEILING
	DOUBLE DUPLEX CONVENIENCE OUTLET, FLUSH IN CEILING
T	THERMOSTAT OUTLET, +48" A.F.F. TO TOP OF BOX (U.O.N.), WITH 4S BOX AND PLASTER RING
J	JUNCTION BOX, CEILING MOUNTED
J	WALL JUNCTION BOX, MOUNTING HEIGHT AS INDICATED ON PLAN
J	FLOOR MOUNTED JUNCTION BOX (PEDESTAL TYPE)
TV	COMBINATION TELEVISION OUTLET AND DUPLEX RECEPTACLE +66" (U.O.N.)
▶	TELEPHONE OUTLET, WALL MOUNTED +15" A.F.F. TO BOTTOM OF BOX (U.O.N.)
▷	DATA OUTLET, WALL MOUNTED +15" A.F.F. TO BOTTOM OF BOX (U.O.N.)
	COMBINED TELEPHONE & DATA OUTLET +15" A.F.F. TO BOTTOM OF BOX (U.O.N.)
FD	COMBINED CEILING FAN CONTROLLER & LIGHTING DIMMER
	CLOCK HANGER OUTLET, +8'-0" SIERRA #2122
D	HAND DRYER OUTLET, MAKE CONNECTIONS TO WALL MOUNTED DRYER, COORDINATE EXACT LOCATION WITH HAND DRYER INSTALLER PRIOR TO ROUGH-IN WORK
D	DIMMER, WALL MOUNTED, +48" A.F.F. TO TOP OF BOX (U.O.N.) (WHERE DIMMER CONTROL ARE INSTALLED FOR THE CONTROL OF CEILING FAN TYPE SHALL HAVE DUAL CONTROL FOR BOTH FAN AND LIGHT)
$	TOGGLE SWITCH, +48" A.F.F. TO TOP OF BOX (U.O.N.), SUFFIX ON SWITCH SYMBOLS SHALL INDICATE THE FOLLOWING: NO SUFFIX = SINGLE POLE 2 = 2 POLE 3 = 3 WAY K = KEY OPERATED R = SPOT MOMENTARY CONTACT SWITCH P = WITH PILOT LIGHT a,b,c,d, ETC. INDICATES FIXTURE CONTROLLED
	WALL MOUNTED AUTOMATIC LIGHT MOTION SENSOR ("a,b" WHEN SHOWN INDICATE DUAL SWITCH) - SWITCH WITH PUSH ON AND AUTO OFF AS MFR. BY WATTSTOPPER OR EQUAL
	CEILING MOUNTED AUTOMATIC LIGHT MOTION SENSOR - AUTO ON AND OFF AS MFR. BY WATTSTOPPER OR EQUAL
SM	30A,2P OR 60A,2P MOTOR RATED TOGGLE TYPE DISCONNECT SWITCH TO BE MOUNTED ON HVAC/PLUMBING EQUIPMENT
	FLEXIBLE CONNECTION TO EQUIPMENT
	SURFACE MOUNTED CABINET OR EQUIPMENT AS NOTED. +6'-0" TO TOP
	FLUSH MOUNTED CABINET OR EQUIPMENT AS NOTED +6'-0" TO TOP
	SURFACE MOUNTED BRANCH CIRCUIT PANELBOARD
	FLUSH MOUNTED BRANCH CIRCUIT PANELBOARD
	SWITCHBOARD, DISTRIBUTION BOARD
	TELEPHONE PLYWOOD BACKBOARD SIZE AS INDICATED ON PLANS
"T1B"	"DRY TYPE" TRANSFORMER DESIGNATION
	CONDUIT RUN IN OR BELOW FLOOR SLAB OR UNDERGROUND - 3/4" C. MINIMUM
	CONDUIT RUN CONCEALED IN WALL OR ABOVE FINISHED CEILING - 1/2" C.
	CONDUIT RUN EXPOSED 2#12, ½"C. · 4#12, ½"C. · 6#12, ¾"C. 3#12, ½"C. · 5#12, ¾"C. · 7#12, ¾"C. #10 2#10, ½"C. · #10 4#10, ½"C. · #10 6#10, ¾"C. 3#10, ½"C. #10 · 5#10, ¾"C. #10 · #10, 1"C. #10 #8 2#8, ¾"C. · #8 3#8, ¾"C. · #8 4#8, 1"C.
	WIRE SIZE OTHER THAN #12, #10 OR #8 IS NOTED ON EACH CONDUIT RUN WITH SIZE OF CONDUIT (I.E. 3#6 - 1"C.) SEE GENERAL NOTE #41.
—E—	EXISTING CONDUIT RUN
#10	HASH MARKS INDICATES THE QUANTITY OF CONDUCTORS REQUIRED. NO HASH MARKS INDICATES 2 #12 AWG. CONDUCTORS LARGER THAN SIZE #12 AWG ARE INDICATED NEXT TO HASH MARKS
HA-1,2,5	INDICATE HOMERUN TO DESIGNATED PANEL BOARD, SWITCH GEAR, OR SIGNAL CABINET WHEN SHOWN INDICATE THE FOLLOWING: BRANCH CIRCUIT NUMBERS HOUSE PANEL OR DISTRIBUTION PANEL
T	LOW VOLTAGE 115/24 VAC TRANSFORMER MOUNTED ABOVE CEILING BY EDWARD OR EQUAL
	PUSH BUTTON OUTLET AT +48" A.F.F. TO TOP OF BOX (U.O.N.), FOR DOOR BELL SYSTEM
B	DOOR BELL WITH LOW VOLTAGE 115/24 VAC TRANSFORMER WALL MOUNTED 6'-6" A.F.F. BY NUTONE OR EQUAL.
WM	SECURITY OUTLET BOX FOR MOTION SENSOR, WALL MOUNTED 9'-0" A.F.F.
M	SECURITY MOTION SENSOR OUTLET, CEILING MOUNTED
B	SECURITY DOOR CONTACT MOUNTED ABOVE CEILING
—S—	1/2" SECURITY CONDUIT ONLY RUN
—S—	1" SECURITY CONDUIT ONLY HOMERUN TO SECURITY CONTROL CABINET
TV	TV ANTENNA OUTLET BOX WALL MOUNTED UNLESS OTHERWISE NOTED.
—TV—	TV SYSTEM ANTENNA CABLING RUN - PROVIDE (1) RG-59/U COAXIAL CABLE FOR ROOF ANTENNA SYSTEM AND (1) RG-56/U FOR CATV SYSTEM.
—STV—	SATELLITE TV SYSTEM ANTENNA CABLING RUN - PROVIDE (2) RG-56/U COAXIAL CABLES SATELLITE TV DISH SYSTEM
T	LOW VOLTAGE 115/24 VAC TRANSFORMER MOUNTED ABOVE CEILING BY "EDWARD" OR EQUAL
SP	CEILING MOUNTED SPEAKER/TONE GENERATOR FOR PUBLIC ADDRESS WITH BUILT IN FLASHING STROBE
P1A	INDICATES REFERENCE TO PANELBOARD "P1A"
2A	ELECTRICAL FEEDER DESIGNATION
R	ELECTRIC COOKING (RANGE OUTLET) +15" A.F.F. - 208V, 50A, ,3W, 2P GROUNDED RECEPTACLE (U.O.N.)

LOW VOLTAGE NOTES

A. FIRE ALARM SYSTEM.
1. CONDUITS SHALL BE MINIMUM OF 3/4" EMT, U.O.N.
2. FLEXIBLE CONDUIT ARE NOT ALLOWED IN CONCEALED SPACES.

B. SECURITY SYSTEM.
1. CONDUITS SHALL BE MINIMUM OF 11/2" EMT, U.O.N.
3. FLEXIBLE CONDUIT ARE NOT ALLOWED IN CONCEALED SPACES.

ELECTRICAL SHEET INDEX

Sheet Number	Sheet Title	Current Issue
E-0.1	ELECTRICAL GENERAL NOTES, SYMBOLS LEGEND & SHEET INDEX	100% DD
E-1.0	SITE UTILITY PLAN	100% DD
E-1.1	SITE ELECTRICAL DISTRIBUTION PLAN	100% DD
E-1.2	SITE LIGHTING PLAN	100% DD
E-1.2P	SITE LIGHTING PHOTOMETRIC PLAN	100% DD
E-1.3	SITE ELECTRICAL PLAN	100% DD
E-2.1	FIRST FLOOR LIGHTING PLAN	100% DD
E-2.1.1	FIRST FLOOR POWER AND SIGNAL PLAN	100% DD
E-2.2	SECOND FLOOR LIGHTING PLAN	100% DD
E-2.2.1	SECOND FLOOR POWER AND SIGNAL PLAN	100% DD
E-2.3	ELECTRICAL ROOF PLAN	100% DD
E-4.1	PARTIAL ENLARGED KITCHEN ELECTRICAL FLOOR PLAN	100% DD
E-5.1	ELECTRICAL SINGLE LINE DIAGRAM	100% DD
E-6.1	ELECTRICAL DETAILS - SHEET ONE	100% DD
E-6.2	ELECTRICAL DETAILS - SHEET TWO	100% DD

Y&M Architects
Y&M Architects
255 South Santa Fe Avenue, Suite 103
Los Angeles, CA 90012
Telephone: 213 623 2107
www.ymarch.com

COPYRIGHT ©2024 BREEN DESIGN GROUP

DRAWN BY	JM, FT
DESIGNED BY	CVK, FT, JM
CHECKED BY	CVK, FT, AA
APPROVED BY	DM

BREEN DESIGN GROUP
3825 DEL AMO BOULEVARD
TORRANCE, CA 90503
PH: 310 464 8404
WWW.BREENDESIGN.COM

REGISTERED PROFESSIONAL ENGINEER DESMOND MAHONY NO. E20642 EXP. 03-31-26 ELECTRICAL STATE OF CALIFORNIA

FRESNO SENIOR CENTER

Project. *

ELECTRICAL GENERAL NOTES, SYMBOLS LEGEND & SHEET INDEX

Integrated Community Development

Developer. 20750 Ventura Boulevard, Suite 155 Woodland Hills, CA 91364

Project No.: 138-24-001 Scale: NONE

06.11.24 Date

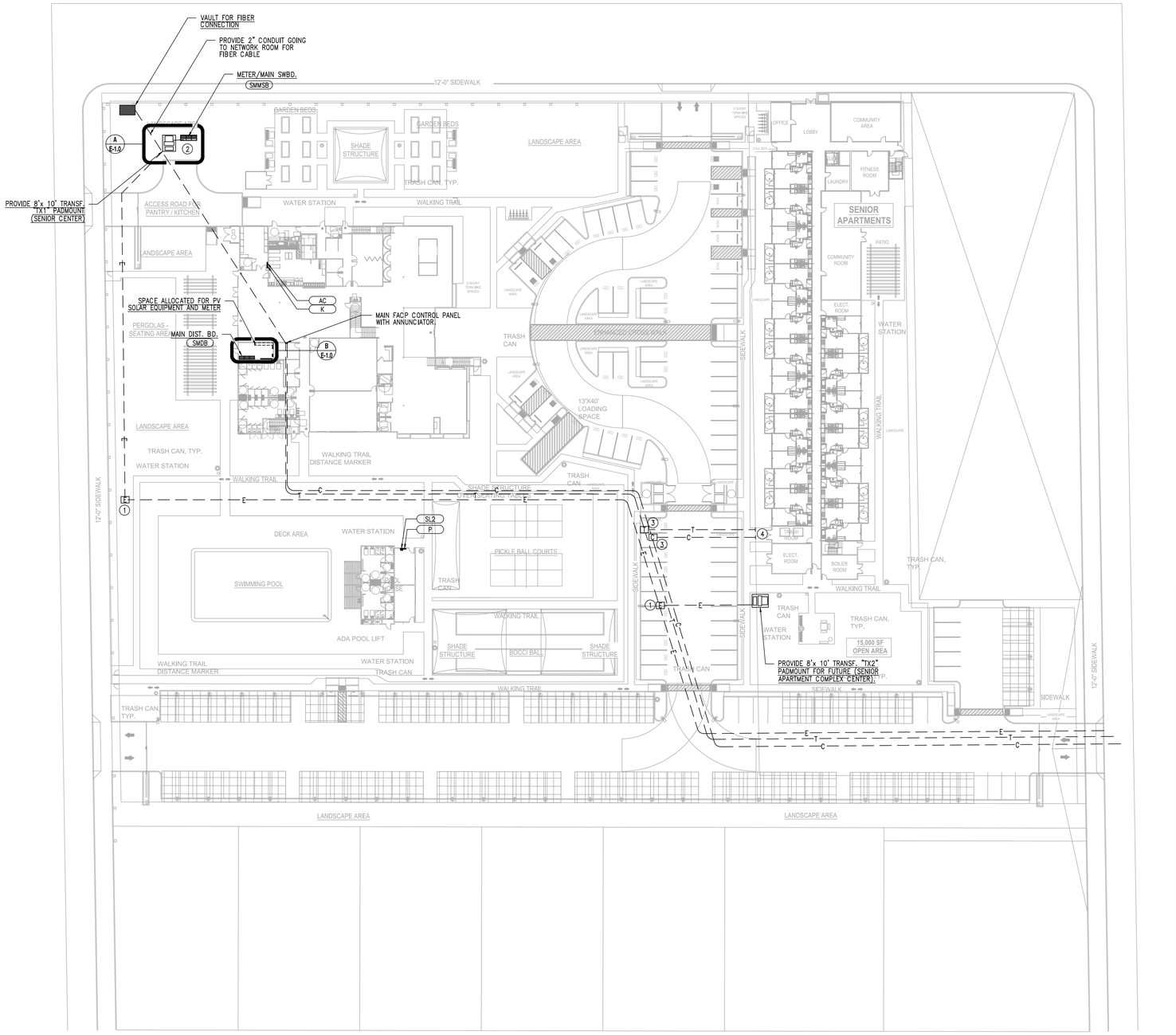

SITE UTILITY PLAN

SCALE: 1/16" = 1' – 0" (1)

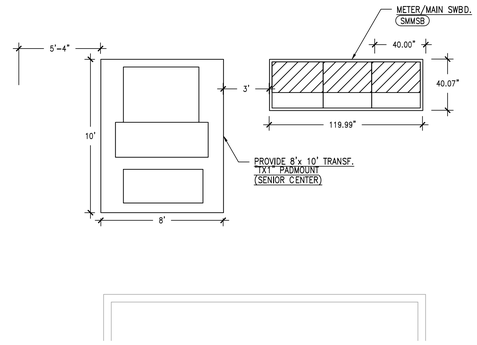

POWER COMPANY TRANSF. PAD DETAIL & SWBD "SMMSB"

SCALE: 1/4" = 1'–0" (A)

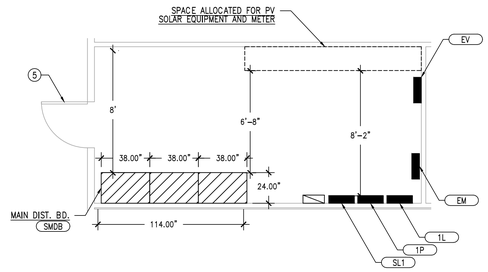

METER/MAIN SWITCHBOARD "SMMSB" FLOOR PLANS

SCALE: 1/4" = 1'–0" (B)

GENERAL NOTES

1. ALL NEW UNDERGROUND CONDUIT SYSTEMS SHALL BE COORDINATED WITH, AND INSTALLED IN ACCORDANCE WITH LOCAL UTILITY COMPANY'S REQUIREMENTS.
2. ALL NEW UNDERGROUND CONDUIT SYSTEM INSTALLED FOR POWER COMPANY ELECTRIC SHALL BE CONCRETE ENCASED WITH 3" ENVELOPE AS REQUIRED BY THE LOCAL POWER COMPANY.
3. PRIOR TO START OF ANY UNDERGROUND TRENCHING AND EXCAVATION CONTRACTOR SHALL COORDINATE ALL WORK WITH LOCAL UTILITY COMPANIES.
4. WHERE MULTIPLE UTILITIES ARE PLACED IN A COMMON TRENCH A 12" SEPARATION SHALL BE MAINTAINED BETWEEN THE DIFFERENT UTILITIES (I.E. HIGH VOLTAGE ELECTRICAL DUCTS, SECONDARY ELECTRICAL DUCTS, TELEPHONE AND CABLE TV SERVICE CONDUITS).
5. CONTRACTOR SHALL MAINTAIN A 24" SEPARATION BETWEEN ELECTRICAL CONDUIT DUCT BANKS AND PLUMBING SEWER/WATER LINES.
6. TELEPHONE COMPANY UNDERGROUND CONDUIT SERVICE TO MAIN TELEPHONE BACKBOARD. ALL INSTALLATION SHALL BE IN ACCORDANCE WITH LOCAL TELEPHONE COMPANY REQUIREMENTS.
7. ELECTRICAL EQUIPMENT SHALL BE LISTED BY A FRESNO CITY RECOGNIZED ELECTRICAL TESTING LABORATORY OR APPROVAL BY THE DEPARTMENT OR BUILDING AND SAFETY.
8. NO PIPING DUCTS OR EQUIPMENT FOREIGN TO ELECTRICAL EQUIPMENT SHALL BE PERMITTED TO BE LOCATED ABOVE THE ELECTRICAL EQUIPMENT.
9. EACH SERVICE DISCONNECT SHALL BE PERMANENTLY MARKED TO IDENTIFY IT AS A SERVICE DISCONNECT.
10. ALL ELECTRICAL ROOM PERSONNEL DOORS SHALL OPEN IN THE DIRECTION OF EGRESS AND BE EQUIPPED WITH PANIC BARS, PRESSURE PLATES OR OTHER DEVICES THAT ARE NORMALLY LATCHED BUT OPEN UNDER SIMPLE PRESSURE.
11. ALL MAJOR ELECTRICAL SERVICE EQUIPMENT ARE SUBJECT TO THE APPROVAL OF LOCAL UTILITY COMPANY PRIOR TO ORDER & PURCHASE.
12. REFER TO SINGLE LINE DIAGRAMS E-4.1 FOR OTHER INFORMATION.

REFERENCE NOTES

1. PROVIDE POWER COMPANY H20 LOAD TRAFFIC 3'x 5'x 4'D. PRECAST CONCRETE PULL BOX WITH TRAFFIC COVER LABEL "FRESNO POWER CO."
2. FOR SENIOR CENTER MAIN PG&E SERVICE PROVIDE 120V/208V..3Ø..4W WEATHERPROOF METER/MAIN SWITCHBOARD., INCLUDING THE INSTALLATION OF 6" THICK 2000" PSI CONCRETE HOUSE KEEPING PAD.
3. PROVIDE TELEPHONE AND DATA/CATV COMPANIES PROVIDE H20 LOAD TRAFFIC 3'x 5'x 4'D. PRECAST CONCRETE PULL BOX WITH TRAFFIC COVER LABEL "TEL" OR "DATA/CATV"
4. FOR FUTURE APARTMENT COMPLEX STUB-OUT UNDERGROUND TELEPHONE AND CATV/DATA SERVICE CONDUITS.
5. PROVIDE DOOR WITH LISTED PANIC HARDWARE OPENING TOWARDS EGRESS.

Methods and Requirements for Installing Non-Residential Underground Electric Services 0 – 600 Volts to Customer-Owned Facilities

UG-1: Services Greenbook EDM

Table 5 Cable and Conduit Requirements for Three-Phase Commercial Services [1]

Main Service Panel Rating (amps) [2]	Conduit Size and Number	Cables Required to Serve Maximum Load [6]			
		Aluminum		Copper	
		Per Phase	Neutral	Per Phase	Neutral
100	1–3"	1–1/0	#2	NA	NA
200	1–3"	1–4/0	1–1/0	NA	NA
400	1–5"	1–750	1–4/0	NA	NA
600	2–5"	2–750	2–4/0	NA	NA
800	2–5"	2–750	2–4/0	NA	NA
1,000	3–5"	3–1,000	3–350	NA	NA
1,200 [3]	4–5"	4–1,000	4–350	NA	NA
1,600 [3]	5–5"	5–1,000	5–350	NA	NA
2,000 [3]	7–5"	7–1,000	7–350	NA	NA
2,500 [3, 4]	7–5"	NA	NA	7–1,000	7–250
3,000	Bus Duct	NA	NA	NA	NA
3,500 [5]	Bus Duct	NA	NA	NA	NA
4,000 [5]	Bus Duct	NA	NA	NA	NA

1 3,000–, 3,500–, and 4,000–amp service rated panels require using a bus duct.
2 Service rating must be the termination section, pullcan, service section, or main service switch continuous current rating, whichever is greater.
3 Requires termination provisions (i.e., longer bolts) that allow connectors to be stacked when needed.
4 Limited to 50 feet of cable between the transformer secondary spades and the customer's gear connection point. For greater distances, a bus duct is preferred, but a PG&E approved pad–mounted termination enclosure 2,500–Amps rated is allowed if installed per the requirements listed in Document 063929. For either type of installation, the PG&E installed cable length must not exceed 50 feet.
5 Panels rated over 3000 amps cannot be served at 120/208 V.
6 Cable size shown in Table 5 is the minimum size cable that must be used.

Table 6 Minimum Bend Radius for New Construction

Conduit Diameter	Vertical Radius	Horizontal Radius
2"	24"	36"
3"	24" [1]	36"
4"	36"	36"
5"	36"	60"

1 Only available in 90° bends.

Service Installation

Notes

1. A Vertical 90° manufactured sweep is required to be installed to meet trench grade. The riser conduit must not protrude away from the wall or mounted panel.
   A. Couplings on the riser conduit installed inside the building foundation must be no higher than flush with the top of the concrete. Couplings installed outside building foundation must be installed a minimum of 6" below final grade.
2. The conduit end must extend at least 12 inches away from the foundation. Install the sweep in the direction of the service trench. If a deeper trench is required, the sweep must extend to the same depth as the conduit in the trench.
3. A minimum of 24 inches of cover must be maintained from the top of conduit to the final grade.
4. See *Electric and Gas Service Requirements (Greenbook)Section 5.4.3.* for electric and metering requirements.
5. See *Electric and Gas Service Requirements (Greenbook)Section 3.2.2* for establishing PG&E and applicants underground electric service responsibilities.

Rev. #26: 03–25–22 **063928 Page 7 of 9**

SITE UTILITY PLAN

DATE PLOTTED: 6/3/2024 6:36 PM
ORIGINAL SIZE: ARCH FULL BLEED E1 (36.00 X 42.00 INCHES)
BY: FITA TUTOE
PLOT SCALE: 1:1
LAST SAVED: CVK
PLOT STYLE: BREEN DESIGN GROUP-STB
FILE NAME: H:\PROJECTS\138 CORP FOR BETTER HOUSING\24-001 - FRESNO SENIOR CENTER\01 - CAD\SENIOR CENTER PACKAGE\ELECTRICAL\E-1.0 SITE UTILITY PLAN.DWG

Y&M Architects

Y&M Architects
255 South Santa Fe Avenue, Suite 103
Los Angeles, CA 90012
Telephone: 213 623 2107
www.ymarch.com

DRAWN BY	JM, FT
DESIGNED BY	CVK, FT, JM
CHECKED BY	CVK, FT, AA
APPROVED BY	DM

BREEN DESIGN GROUP
3825 DEL AMO BOULEVARD
TORRANCE, CA 90503
PH: 310 464 8404
WWW.BREENDESIGN.COM

REGISTERED PROFESSIONAL ENGINEER DESMOND MATHAY NO. E20642 EXP. 03-31-26 ELECTRICAL STATE OF CALIFORNIA

COPYRIGHT ©2024 BREEN DESIGN GROUP

FRESNO SENIOR CENTER

Integrated Community Development

Project. *	Developer. 20750 Ventura Boulevard, Suite 155 Woodland Hills, CA 91364	Project No.: 138-24-001	Scale: 1" = 30'	Date 06.11.24	Page E-1.0

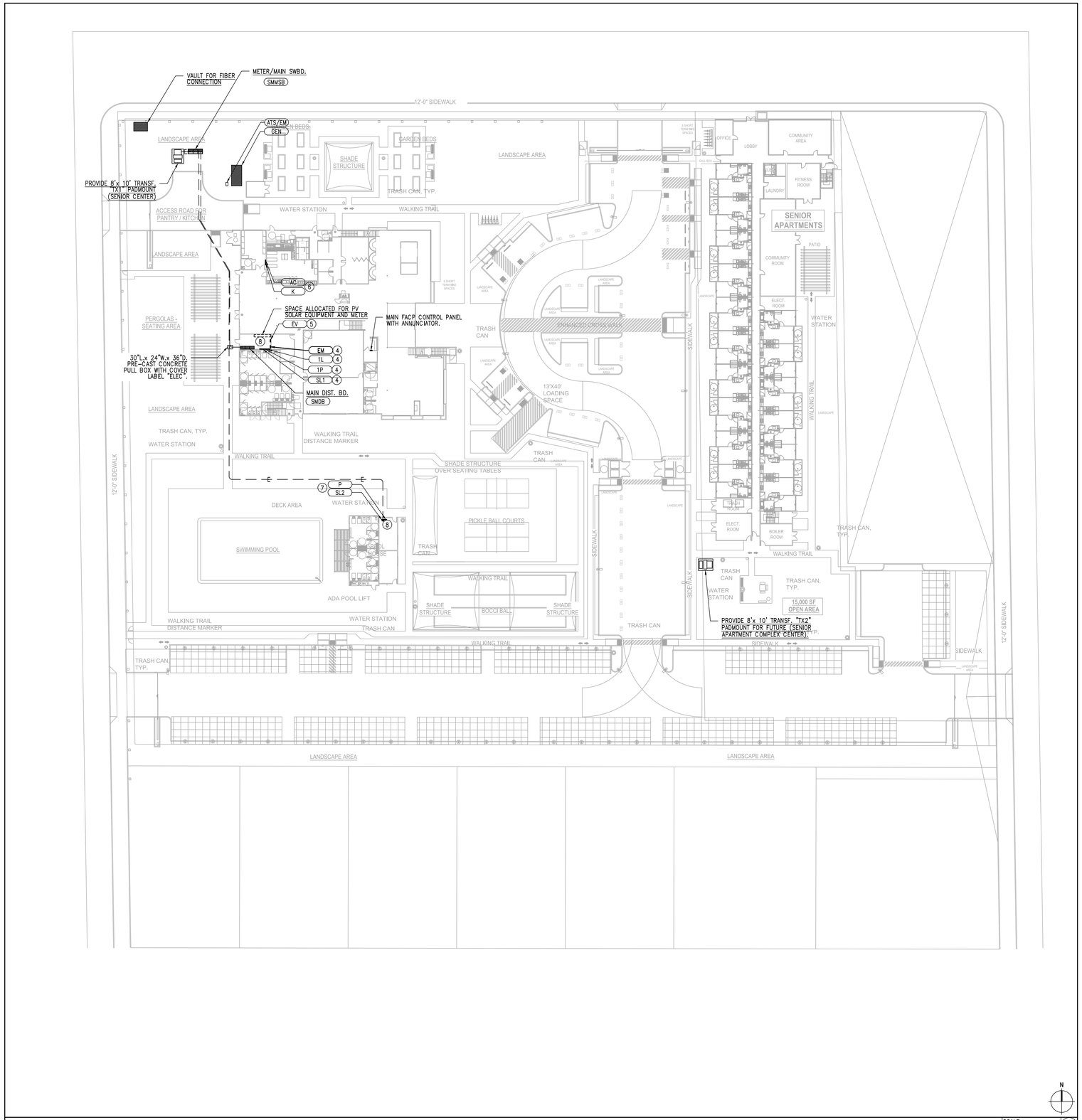

SITE ELECTRICAL DISTRIBUTION PLAN

SCALE: 1/4" = 1'- 0" (1)

SITE ELECTRICAL DISTRIBUTION PLAN

GENERAL NOTES

1. ALL NEW UNDERGROUND CONDUIT SYSTEMS SHALL BE COORDINATED WITH, AND INSTALLED IN ACCORDANCE WITH LOCAL UTILITY COMPANY'S REQUIREMENTS.
2. ALL NEW UNDERGROUND CONDUIT SYSTEM INSTALLED FOR POWER COMPANY ELECTRIC SHALL BE CONCRETE ENCASED WITH 3" ENVELOPE AS REQUIRED BY THE LOCAL POWER COMPANY.
3. PRIOR TO START OF ANY UNDERGROUND TRENCHING AND EXCAVATION CONTRACTOR SHALL COORDINATE ALL WORK WITH LOCAL UTILITY COMPANIES.
4. WHERE MULTIPLE UTILITIES ARE PLACED IN A COMMON TRENCH A 12" SEPARATION SHALL BE MAINTAINED BETWEEN THE DIFFERENT UTILITIES (I.E. HIGH VOLTAGE ELECTRICAL DUCTS, SECONDARY ELECTRICAL DUCTS, TELEPHONE AND CABLE TV SERVICE CONDUITS).
5. CONTRACTOR SHALL MAINTAIN A 24" SEPARATION BETWEEN ELECTRICAL CONDUIT DUCT BANKS AND PLUMBING SEWER/WATER LINES.
6. ELECTRICAL EQUIPMENT SHALL BE LISTED BY A FRESNO CITY RECOGNIZED ELECTRICAL TESTING LABORATORY OR APPROVAL BY THE DEPARTMENT OR BUILDING AND SAFETY.
7. NO PIPING DUCTS OR EQUIPMENT FOREIGN TO ELECTRICAL EQUIPMENT SHALL BE PERMITTED TO BE LOCATED ABOVE THE ELECTRICAL EQUIPMENT.
8. EACH SERVICE DISCONNECT SHALL BE PERMANENTLY MARKED TO IDENTIFY IT AS A SERVICE DISCONNECT.
9. ALL ELECTRICAL ROOM PERSONNEL DOORS SHALL OPEN IN THE DIRECTION OF EGRESS AND BE EQUIPPED WITH PANIC BARS, PRESSURE PLATES OR OTHER DEVICES THAT ARE NORMALLY LATCHED BUT OPEN UNDER SIMPLE PRESSURE.
10. ALL MAJOR ELECTRICAL SERVICE EQUIPMENT ARE SUBJECT TO THE APPROVAL OF LOCAL UTILITY COMPANY PRIOR TO ORDER & PURCHASE.
11. REFER TO SINGLE LINE DIAGRAMS E-4.1 FOR OTHER INFORMATION.

REFERENCE NOTES

1. PROVIDE 30"x 42"x 36"D. PRECAST CONCRETE PULL BOX WITH COVER LABEL "ELECTRIC"
2. FOR SENIOR CENTER MAIN PG&E SERVICE PROVIDE 120V/208V.,3Ø.,4W WEATHERPROOF METER/MAIN SWITCHBOARD., INCLUDING THE INSTALLATION OF 6" THICK 2000" PSI CONCRETE HOUSE KEEPING PAD.
3. 120V/208V.,3Ø.,4W 200A 42 CKT. PANELS - FOR THE ELECTRICAL CONNECTION OF 2ND FLOOR LEVEL LIGHTING AND POWER.
4. 120V/208V.,3Ø.,4W 200A 42 CKT. PANELS FOR THE ELECTRICAL CONNECTION OF LIGHTING, POWER AND SITE LIGHTING.
5. 120V/208V.,3Ø.,4W 200A 42 CKT. PANEL - FOR THE CONNECTION OF NEW AND FUTURE EV CAR CHARGING PANELS.
6. 120V/208V.,3Ø.,4W 200A 42 CKT. PANELS - FOR THE ELECTRICAL CONNECTION KITCHEN EQUIPMENT AND KITCHEN HVAC SYSTEM.
7. 120V/208V.,3Ø.,4W 200A 42 CKT. PANELS - FOR ELECTRICAL CONNECTION OF POOL HOUSE, POOL EQUIPMENT AND SITE/COURTS /POOL LIGHTING. (NOTE: PANEL TO BE LOCATED WITHIN THE POOL BUILDING EQUIPMENT ROOM).
8. PROVIDE 365 DAY PROGRAMMABLE TIME CLOCK FOR THE CONTROL OF EXTERIOR SITE, COURTS AND POOL AREAS LIGHTING

DATE PLOTTED: 5/17/2022 4:43 PM BY: FITA TUTOE
ORIGINAL SIZE: ARCH FULL BLEED E1 (30.00 X 42.00 INCHES) PLOT SCALE: 1:1
LAST SAVED: GDUNDUM
PLOT STYLE: BREEN DESIGN GROUP-STB
FILE NAME: H:\PROJECTS\138 CORP FOR BETTER HOUSING\24-001 - FRESNO SENIOR CENTER\01 - CAD\SENIOR CENTER PACKAGE\ELECTRICAL\E-1.1 SITE ELECTRICAL DISTRIBUTION PLAN.DWG

Y&M Architects

Y&M Architects
255 South Santa Fe Avenue, Suite 103
Los Angeles, CA 90012
Telephone: 213 623 2107
www.ymarch.com

DRAWN BY	JM, FT
DESIGNED BY	CVK, FT, JM
CHECKED BY	CVK, FT, AA
APPROVED BY	DM

BREEN DESIGN GROUP
3825 DEL AMO BOULEVARD
TORRANCE, CA 90503
PH: 310 464 8404
WWW.BREENDESIGN.COM

REGISTERED PROFESSIONAL ENGINEER DIEMOND MATHEW NO. E20642 EXP. 03-31-26 ELECTRICAL STATE OF CALIFORNIA

FRESNO SENIOR CENTER

Integrated Community Development

Project. *	Developer. 20750 Ventura Boulevard, Suite 155 Woodland Hills, CA 91364	Project No.: 138-24-001	Scale: 1" = 30'	06.11.24 Date	E-1.1 Page

COPYRIGHT ©2024 BREEN DESIGN GROUP

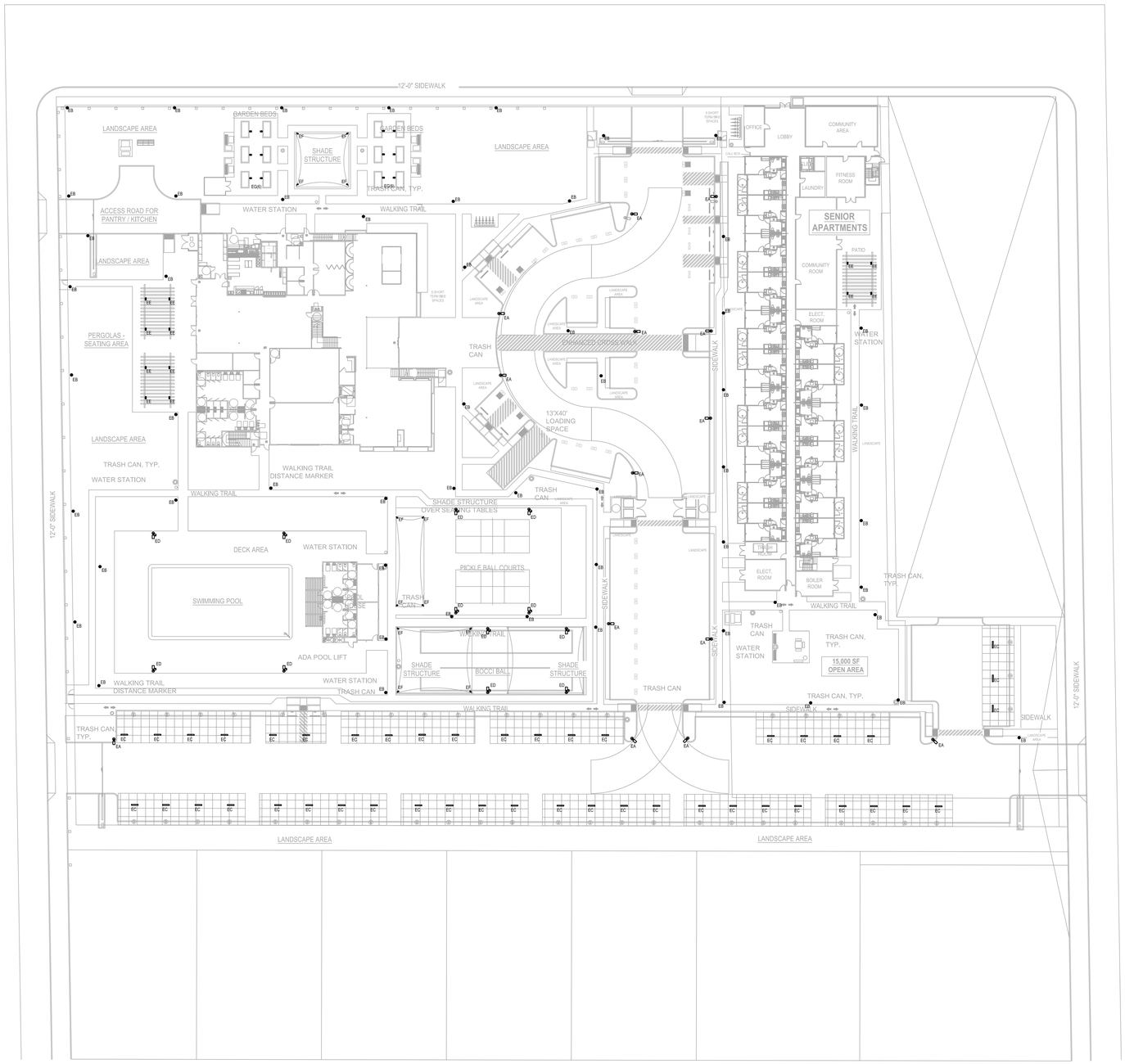

SITE LIGHTING PLAN

SCALE: 1/4" = 1' - 0"

1

SITE LIGHTING FIXTURE SCHEDULE

TYPE	SYMBOL	LAMP	DESCRIPTION	MANUFACTURER
EA		70W, LED	15 FT HIGH LED PARKING LOT LIGHT POLE STANDARD (WITH PHOTOCELL AND LIGHT MOTION SENSOR). EACH LIGHT POLE STANDARD SHALL BE PROVIDE WITH CONCRETE FOUNDATION AS REQUIRED BY STRUCTURAL ENGINEER.	AMERICAN ELECTRIC LIGHTING ATBO-P203-MVOLT-R2
EB		45W, LED	10 FT HIGH LED WALKWAY POST LIGHT STANDARD (WITH PHOTOCELL AND LIGHT MOTION SENSOR). EACH LIGHT POLE STANDARD SHALL BE PROVIDE WITH CONCRETE FOUNDATION AS REQUIRED BY STRUCTURAL ENGINEER.	GO LIGHTING STN-1-T5-25-45-UV-PT238-CC-SSP
EC		50W, LED	48"L LED OUTDOOR STRIP CARPORT CANOPY UTILITY LIGHT (WITH LIGHT MOTION SENSOR) MOUNTED ON UNDERSIDE OF CARPORT PV CANOPY.	RAB LIGHTING SEAL4-50N/D10/LCS
ED		600W, LED	15 FT HIGH LED POOL/COURT SPORT LIGHT POLE STANDARD (FIXTURE TO BE EQUIPMENT WITH BRACKET FLOOD NITE LIGHT (WITH PHOTOCELL AND LIGHT MOTION SENSOR). EACH LIGHT POLE STANDARD SHALL BE PROVIDE WITH CONCRETE FOUNDATION AS REQUIRED BY STRUCTURAL ENGINEER. NOTE: 1. SPORT LIGHT TO ONLY OPERATE DAILY DURING NIGHT DURING POOL AND/OR COURTS NIGHT OPERATING HOURS (DUSK TO 10:00 pm) OR PER THE TIME SCHEDULE GIVEN BY THE CITY. 2. BRACKET FLOOD NITE LIGHT TO OPERATE DAILY DURING NIGHT TIME PERIODS (DUSK TO DAWN) AND HAVE MOTION SENSOR TO REDUCE LIGHTING BY 50% DURING UNOCCUPIED HOURS (MIDNIGHT TO MORNING).	ORACLE LIGHTING OSP-125-F-600W
EE		60W, LED	TRELLIS LED WEATHERPROOF DOWN LIGHT MOUNTED BETWEEN TRELLIS CANOPY. TRELLIS LIGHT TO OPERATE DAILY DURING NIGHT TIME PERIOD (DUSK TO DAWN). NOTE: 1. TRELLIS LED DOWN LIGHT TO OPERATE DAILY DURING NIGHT TIME PERIODS (DUSK TO DAWN) AND HAVE MOTION SENSOR TO REDUCE LIGHTING BY 50% DURING UNOCCUPIED HOURS (MIDNIGHT TO MORNING).	ELITE LIGHTING ECH-OWS-1001
EF		30W, LED	SHADE STRUCTURE LED ADJUSTABLE FLOOD LIGHT MOUNTED BETWEEN TRELLIS CANOPY. FLOOD LIGHT TO OPERATE DAILY DURING NIGHT TIME PERIOD (DUSK TO DAWN). FIXTURE TO BE MOUNTED TO SHADE STRUCTURE SUPPORT POLES. NOTE: 1. SHADE STRUCTURE LED ACCENT FLOOD LIGHT TO OPERATE DAILY DURING NIGHT TIME PERIODS (DUSK TO DAWN) AND HAVE MOTION SENSOR TO REDUCE LIGHTING BY 50% DURING UNOCCUPIED HOURS (MIDNIGHT TO MORNING).	ORACLE LIGHTING OPC-FC-116-LED-2000L-DIM10-120-30K-BZ
EG		23W, LED	GARDEN AREA LANDSCAPE LED PLANTER LIGHT TO OPERATE DAILY DURING NIGHT TIME PERIOD (DUSK TO DAWN). FIXTURE TO BE GROUND MOUNTED IN SOIL PLANTER AREAS	ORACLE LIGHTING OWM-S-202-LED-1200L-MVOLT-50K-BK-PHC

GENERAL NOTES

1. ALL LIGHT FIXTURES LOCATED ON THE BUILDING EXTERIOR AND EXPOSED TO WEATHER SHALL BE WET LOCATION APPROVED (WEATHERPROOF).
2. ALL EXTERIOR LIGHTING SHALL BE CONTROLLED BY TIME CLOCK AND PHOTOCELL.

REFERENCE NOTES

1. AT PARKING LOT LIGHT STANDARD PROVIDE AND INSTALL FOUNDATION. REFER TO DETAIL 9/E-5.1.
2. AT WALKWAY LIGHT POLE STANDARD PROVIDE AND INSTALL FOUNDATION REFER TO DETAIL 10/E-5.1.
3. PROVIDE AND MOUNT PHOTOCELL +8'-0" A.F.F. PROVIDE AND CONNECT 1/2" C., 2#12 TO TIME CLOCK WITHIN ELECTRIC ROOM PANEL BOARD.
4. PROVIDE NEW FLUSH IN FLOOR MASONRY TYPE 4D JUNCTION BOX. +32"A.F.F., WITH COVER-PLATE LABEL "FOR ELECTRIC CAR CHARGER STATION".
5. PROVIDE NEW FLUSH IN FLOOR MASONRY TYPE 4D JUNCTION BOX. +32"A.F.F., WITH COVER-PLATE LABEL "FOR FUTURE ELECTRIC CAR CHARGER STATION".
6. PROVIDE 1"C. WITH 3#8 + 1#10 GND. PROVIDE NEW 40A, 208V, SINGLE RECEPTACLE FOR CAR CHARGER. FEEDER AND CIRCUIT HOMERUN TO EV PANEL.
7. PROVIDE 1"C. WITH 3#8 + 1#10 GND. PROVIDE NEW 40A, 208V, SINGLE RECEPTACLE FOR FUTURE CAR CHARGER. FEEDER AND CIRCUIT HOMERUN TO EV PANEL.

SITE LIGHTING PLANS

DATE PLOTTED: 5/17/2022 4:43 PM
ORIGINAL SIZE: ARCH FULL BLEED E1 (30.00 X 42.00 INCHES)
BY: FITA TUTOE
PLOT SCALE: 1:1
LAST SAVED: CVK
PLOT STYLE: BREEN DESIGN GROUP.STB
FILE NAME: H:\PROJECTS\138 CORP FOR BETTER HOUSING\24-001 - FRESNO SENIOR CENTER\01 - CAD\SENIOR CENTER PACKAGE\ELECTRICAL\E-1.2 SITE LIGHTING PLAN.DWG

Y&M Architects

Y&M Architects
255 South Santa Fe Avenue, Suite 103
Los Angeles, CA 90012
Telephone: 213 623 2107
www.ymarch.com

DRAWN BY	JM, FT
DESIGNED BY	CVK, FT, JM
CHECKED BY	CVK, FT, AA
APPROVED BY	DM

BREEN DESIGN GROUP
3825 DEL AMO BOULEVARD
TORRANCE, CA 90503
PH: 310 464 8404
WWW.BREENDESIGN.COM

REGISTERED PROFESSIONAL ENGINEER DESMOND MATHONIA NO. E20642 EXP. 03-31-26 ELECTRICAL STATE OF CALIFORNIA

FRESNO SENIOR CENTER

Integrated Community Development

Project. *	Developer. 20750 Ventura Boulevard, Suite 155 Woodland Hills, CA 91364	Project No.: 138-24-001	Scale: 1" = 30'	Date 06.11.24	Page E-1.2

COPYRIGHT ©2024 BREEN DESIGN GROUP

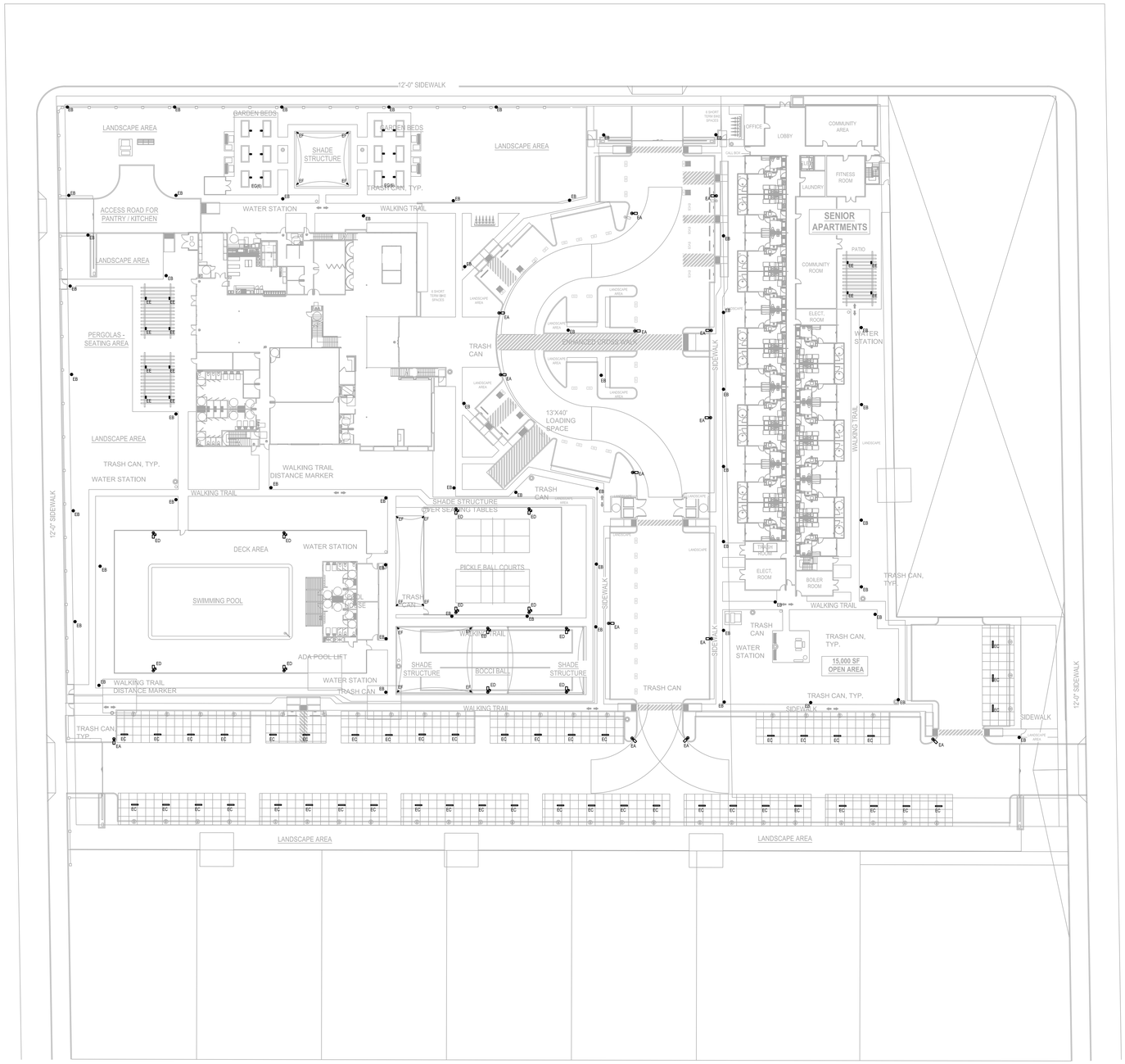

SITE LIGHTING PHOTOMETRIC PLAN

SCALE: 1/4" = 1' - 0"

1

N

LUMINAIRE SCHEDULE

SYMBOL	TYPE	TOTAL LUM. WATTS	NO. LAMPS	MANUFACTURER	DESCRIPTION
	EA	--W LED	-	TBD	REFER TO FIXTURE SCHEDULE
	EB	--W LED	-	TBD	REFER TO FIXTURE SCHEDULE
	EC	--W LED	-	TBD	REFER TO FIXTURE SCHEDULE
	ED	--W LED	-	TBD	REFER TO FIXTURE SCHEDULE
	EE	--W LED	-	TBD	REFER TO FIXTURE SCHEDULE
	EF	--W LED	-	TBD	REFER TO FIXTURE SCHEDULE
	EG	--W LED	-	TBD	REFER TO FIXTURE SCHEDULE

CALCULATION SUMMARY

LABEL	CALC. TYPE	UNITS	AVG.	MAX.	MIN.	AVG./MIN.	MAX./MIN.
SITE PLAN	ILLUMINANCE	FC	0.0	0.0	0.0	N/A	N/A

SITE LIGHTING PHOTOMETRIC PLAN

FILE NAME: H:\PROJECTS\138 CORP FOR BETTER HOUSING\24-001 - FRESNO SENIOR CENTER\01 - CAD\SENIOR CENTER PACKAGE\ELECTRICAL\E-1.2P SITE LIGHTING PHOTOMETRIC PLAN.DWG

LAST SAVED: CCALBONERA

PLOT STYLE: BREEN DESIGN GROUP.STB

BY: FITA TUTOE

PLOT SCALE: 1:1

DATE PLOTTED: 5/17/2022 4:43 PM

ORIGINAL SIZE: ARCH FULL BLEED E1 (30.00 X 42.00 INCHES)

Y&M Architects

Y&M Architects
255 South Santa Fe Avenue, Suite 103
Los Angeles, CA 90012
Telephone: 213 623 2107
www.ymarch.com

DRAWN BY	JM, FT
DESIGNED BY	CVK, FT, JM
CHECKED BY	CVK, FT, AA
APPROVED BY	DM

BREEN DESIGN GROUP
3825 DEL AMO BOULEVARD
TORRANCE, CA 90503
PH: 310-464-8404
WWW.BREENDESIGN.COM

REGISTERED PROFESSIONAL ENGINEER
DESMOND MATHONY
NO. E20642
EXP. 03-31-26
ELECTRICAL
STATE OF CALIFORNIA

COPYRIGHT ©2024 BREEN DESIGN GROUP

FRESNO SENIOR CENTER

Integrated Community Development

Project. *	Developer. 20750 Ventura Boulevard, Suite 155 Woodland Hills, CA 91364	Project No.: 138-24-001	Scale: 1" = 30'	Date 06.11.24	Page E-1.2P

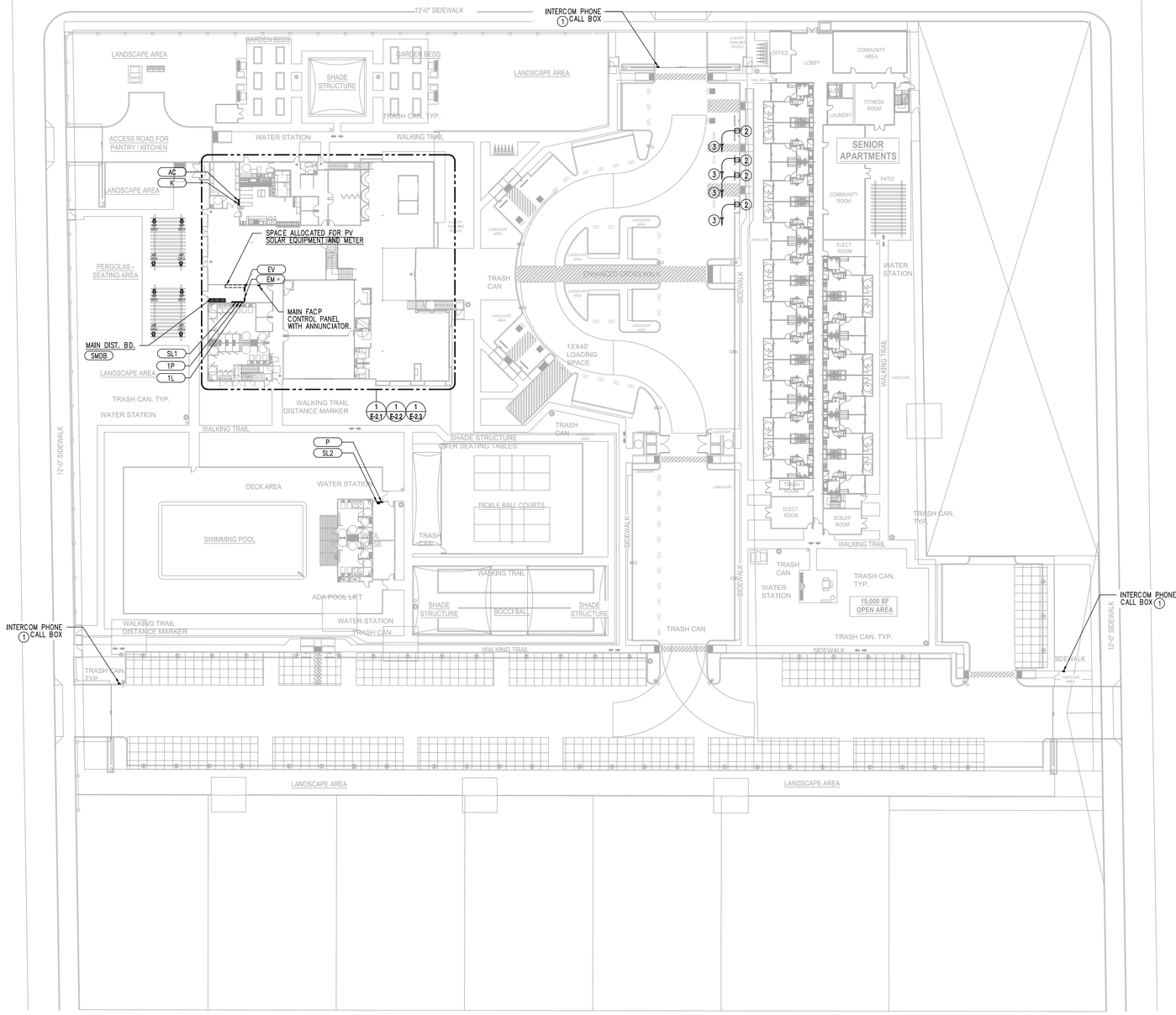

SITE ELECTRICAL PLAN

SCALE: 1/4" = 1' - 0" (1)

GENERAL NOTES

1. ELECTRICAL EQUIPMENT SHALL BE LISTED BY A FRESNO CITY RECOGNIZED ELECTRICAL TESTING LABORATORY OR APPROVAL BY THE DEPARTMENT OR BUILDING AND SAFETY.
2. NO PIPING DUCTS OR EQUIPMENT FOREIGN TO ELECTRICAL EQUIPMENT SHALL BE PERMITTED TO BE LOCATED ABOVE THE ELECTRICAL EQUIPMENT.
3. EACH SERVICE DISCONNECT SHALL BE PERMANENTLY MARKED TO IDENTIFY IT AS A SERVICE DISCONNECT.
4. ALL ELECTRICAL ROOM PERSONNEL DOORS SHALL OPEN IN THE DIRECTION OF EGRESS AND BE EQUIPPED WITH PANIC BARS, PRESSURE PLATES OR OTHER DEVICES THAT ARE NORMALLY LATCHED BUT OPEN UNDER SIMPLE PRESSURE.
5. ALL MAJOR ELECTRICAL SERVICE EQUIPMENT ARE SUBJECT TO THE APPROVAL OF LOCAL UTILITY COMPANY PRIOR TO ORDER & PURCHASE.
6. REFER TO SINGLE LINE DIAGRAMS E-4.1 FOR OTHER INFORMATION.

REFERENCE NOTES

1. PROVIDE POWER FOR INTERCOM PHONE CALL BOX. VERIFY AND COORDINATE EXACT LOCATION AND REQUIREMENT WITH THE ARCHITECT PRIOR TO INSTALLATION. CONNECT TO CIRCUIT HP-XX.
2. PROVIDE NEW FLUSH IN FLOOR MASONRY TYPE 4D JUNCTION BOX, +32"A.F.F., WITH COVER-PLATE LABEL "FOR ELECTRIC CAR CHARGER STATION".
3. PROVIDE 1"C. WITH 3#8 + 1#10 GND. PROVIDE NEW 40A, 208V, SINGLE RECEPTACLE FOR CAR CHARGER. FEEDER AND CIRCUIT HOMERUN TO EV PANEL.

SITE ELECTRICAL PLAN

DATE PLOTTED: 5/17/2022 4:43 PM BY: FITA TUTOE
ORIGINAL SIZE: ARCH FULL BLEED E1 (30.00 X 42.00 INCHES) PLOT SCALE: 1:1
LAST SAVED: GDUMOUM
PLOT STYLE: BREEN DESIGN GROUP.STB
FILE NAME: H:\PROJECTS\138 CORP FOR BETTER HOUSING\24-001 - FRESNO SENIOR CENTER\01 - CAD\SENIOR CENTER PACKAGE\ELECTRICAL\E-1.3 SITE ELECTRICAL PLAN.DWG

Y&M Architects
255 South Santa Fe Avenue, Suite 103
Los Angeles, CA 90012
Telephone: 213 623 2107
www.ymarch.com

DRAWN BY	JM, FT
DESIGNED BY	CVK, FT, JM
CHECKED BY	CVK, FT, AA
APPROVED BY	DM

BREEN DESIGN GROUP
3825 DEL AMO BOULEVARD
TORRANCE, CA 90503
PH: 310 464 8404
WWW.BREENDESIGN.COM

REGISTERED PROFESSIONAL ENGINEER DESMOND MAYNARD NO. E20642 EXP. 03-31-26 ELECTRICAL STATE OF CALIFORNIA

COPYRIGHT ©2024 BREEN DESIGN GROUP

FRESNO SENIOR CENTER

Integrated Community Development

Project. *	Developer. 20750 Ventura Boulevard, Suite 155 Woodland Hills, CA 91364	Project No.: 138-24-001	Scale: 1" = 30'	Date 06.11.24	Page E-1.3

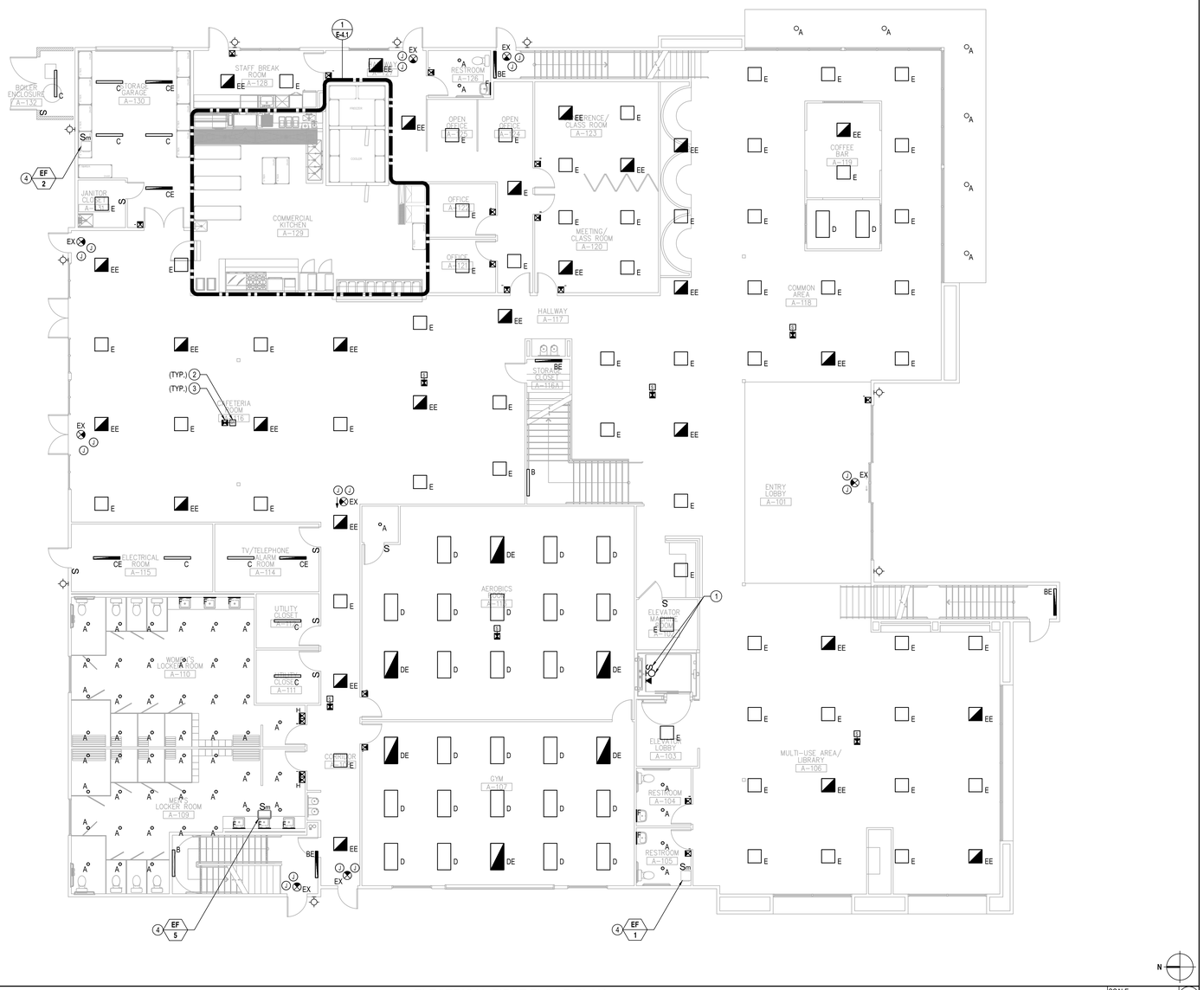

ELECTRICAL FIRST FLOOR PLAN

SCALE: 1/8" = 1'-0"

1

PANEL "1L"

120/208 VOLTS | 3 PHASE | 4 WIRE

LOCATION SENIOR BLDG (1ST FL. EQ. RM.)

FEEDER

MAIN BKR: M.L.O. | BRACE 22,000 AIC | 225A BUSSING

ENTER CAB'T. AT BOTTOM | SURFACE MTG.

REMARKS	BKR. TYPE	LOCATION	VOLT AMPS ϕA	ϕB	ϕC	LTG or LCL	REC	MIS	CIR	BKR	BKR	CIR	MIS	REC	LTG or LCL	VOLT AMPS ϕA	ϕB	ϕC	LOCATION	BKR. TYPE	REMARKS
–	–	SPARE	0			–	–	–	1	20/1	20/1	2	–	–	–	0			SPARE	–	–
–	–	SPARE		0		–	–	–	3	20/1	20/1	4	–	–	–		0		SPARE	–	–
–	–	SPARE			0	–	–	–	5	20/1	20/1	6	–	–	–			0	SPARE	–	–
–	–	SPARE	0			–	–	–	7	20/1	20/1	8	–	–	–	0			SPARE	–	–
–	–	SPARE		0		–	–	–	9	20/1	20/1	10	–	–	–		0		SPARE	–	–
–	–	SPARE			0	–	–	–	11	20/1	20/1	12	–	–	–			0	SPARE	–	–
–	–	SPARE	0			–	–	–	13	20/1	20/1	14	–	–	–	0			SPARE	–	–
–	–	SPARE		0		–	–	–	15	20/1	20/1	16	–	–	–		0		SPARE	–	–
–	–	SPARE			0	–	–	–	17	20/1	20/1	18	–	–	–			0	SPARE	–	–
–	–	SPACE	–			–	–	–	19	–	–	20	–	–	–	–			SPACE	–	–
–	–	SPACE		–		–	–	–	21	–	–	22	–	–	–		–		SPACE	–	–
–	–	SPACE			–	–	–	–	23	–	–	24	–	–	–			–	SPACE	–	–
–	–	SPACE	–			–	–	–	25	–	–	26	–	–	–	–			SPACE	–	–
–	–	SPACE		–		–	–	–	27	–	–	28	–	–	–		–		SPACE	–	–
–	–	SPACE			–	–	–	–	29	–	–	30	–	–	–			–	SPACE	–	–
–	–	SPACE	–			–	–	–	31	–	–	32	–	–	–	–			SPACE	–	–
–	–	SPACE		–		–	–	–	33	–	–	34	–	–	–		–		SPACE	–	–
–	–	SPACE			–	–	–	–	35	–	–	36	–	–	–			–	SPACE	–	–
–	–	SPACE	–			–	–	–	37	–	–	38	–	–	–	–			SPACE	–	–
–	–	SPACE		–		–	–	–	39	–	–	40	–	–	–		–		SPACE	–	–
–	–	SPACE			–	–	–	–	41	–	–	42	–	–	–			–	SPACE	–	–
–	–																			–	–

ϕA: 0 VA | ϕB: 0 VA | ϕC: 0 VA

TOTAL CONNECTED LOAD: 0 VA OR 0.0 AMPS @ 208 VOLTS – 3 ø

LCL: 0 VA x 125% = 0 VA

FDL: 0 VA OR 0.0 AMPS

HACR = HACR TYPE CIRCUIT BREAKER L/O = PROVIDE LOCK-OFF DEVICE ON CIRCUIT BREAKER AFCI = ARC FAULT INTERRUPTING TYPE CIRCUIT BREAKER

GFCI = GROUND FAULT INTERRUPTING TYPE CIRCUIT BREAKER

(H) **ALL PANEL BOARD BRANCH CIRCUIT BREAKERS THE FOLLOWING SHALL APPLY:** ON ALL MULTI-WIRED HOMERUN CIRCUIT BREAKERS (REFER TO PLANS TO DETERMINE 2 AND/OR 3 HOMERUNS), CONTRACTOR SHALL FIELD INSTALL ON ALL MULTI-USE CIRCUIT BREAKERS APPROVED HANDLE TIE (PER CEC 210.4(B))

NOTES:

1. WITHIN SEPARATE COMPARTMENT OF PANEL BOARD PROVIDE INTERMATIC PROGRAMMABLE TIME CLOCK (INTERMATIC #ET70415CR) WITH ELECTRICALLY HELD RELAYS AND PHOTO CELL INTERFACE. CIRCUITS IDENTIFIED ON PANEL SCHEDULE TO BE CONTROLLED BY TIME CLOCK. BRANCH CIRCUITRY SHALL BE CONNECTED TO CONTACTS
2. PROVIDE WITHIN SEPARATE COMPARTMENT (1) 6 POLE AND (1) 6 POLE 20A RATED 120V ELECTRICALLY OPERATED, MECHANICALLY HELD RELAYS FOR THE CONNECTIONS AND CONTROL OF EXTERIOR LIGHTING (ON LEVEL 1 AND 2).

PANEL "EM"

120/208 VOLTS | 3 PHASE | 4 WIRE

LOCATION SENIOR BLDG (1ST FL. EQ. RM.)

FEEDER

MAIN BKR: M.L.O. | BRACE 22,000 AIC | 100A BUSSING

ENTER CAB'T. AT BOTTOM | SURFACE MTG.

REMARKS	BKR. TYPE	LOCATION	VOLT AMPS ϕA	ϕB	ϕC	LTG or LCL	REC	MIS	CIR	BKR	BKR	CIR	MIS	REC	LTG or LCL	VOLT AMPS ϕA	ϕB	ϕC	LOCATION	BKR. TYPE	REMARKS
–	–	SPARE	0			–	–	–	1	20/1	20/1	2	–	–	–	0			SPARE	–	–
–	–	SPARE		0		–	–	–	3	20/1	20/1	4	–	–	–		0		SPARE	–	–
–	–	SPARE			0	–	–	–	5	20/1	20/1	6	–	–	–			0	SPARE	–	–
–	–	SPARE	0			–	–	–	7	20/1	20/1	8	–	–	–	0			SPARE	–	–
–	–	SPARE		0		–	–	–	9	20/1	20/1	10	–	–	–		0		SPARE	–	–
–	–	SPARE			0	–	–	–	11	20/1	20/1	12	–	–	–			0	SPARE	–	–
–	–	SPARE	0			–	–	–	13	20/1	20/1	14	–	–	–	0			SPARE	–	–
–	–	SPARE		0		–	–	–	15	20/1	20/1	16	–	–	–		0		SPARE	–	–
–	–	SPARE			0	–	–	–	17	20/1	20/1	18	–	–	–			0	SPARE	–	–
–	–	SPACE	–			–	–	–	19	–	–	20	–	–	–	–			SPACE	–	–
–	–	SPACE		–		–	–	–	21	–	–	22	–	–	–		–		SPACE	–	–
–	–	SPACE			–	–	–	–	23	–	–	24	–	–	–			–	SPACE	–	–
–	–	SPACE	–			–	–	–	25	–	–	26	–	–	–	–			SPACE	–	–
–	–	SPACE		–		–	–	–	27	–	–	28	–	–	–		–		SPACE	–	–
–	–	SPACE			–	–	–	–	29	–	–	30	–	–	–			–	SPACE	–	–
–	–	SPACE	–			–	–	–	31	–	–	32	–	–	–	–			SPACE	–	–
–	–	SPACE		–		–	–	–	33	–	–	34	–	–	–		–		SPACE	–	–
–	–	SPACE			–	–	–	–	35	–	–	36	–	–	–			–	SPACE	–	–
–	–	SPACE	–			–	–	–	37	–	–	38	–	–	–	–			SPACE	–	–
–	–	SPACE		–		–	–	–	39	–	–	40	–	–	–		–		SPACE	–	–
–	–	SPACE			–	–	–	–	41	–	–	42	–	–	–			–	SPACE	–	–
–	–																			–	–

ϕA: 0 VA | ϕB: 0 VA | ϕC: 0 VA

TOTAL CONNECTED LOAD: 0 VA OR 0.0 AMPS @ 208 VOLTS – 3 ø

LCL: 0 VA x 125% = 0 VA

FDL: 0 VA OR 0.0 AMPS

HACR = HACR TYPE CIRCUIT BREAKER L/O = PROVIDE LOCK-OFF DEVICE ON CIRCUIT BREAKER AFCI = ARC FAULT INTERRUPTING TYPE CIRCUIT BREAKER

GFCI = GROUND FAULT INTERRUPTING TYPE CIRCUIT BREAKER

(H) **ALL PANEL BOARD BRANCH CIRCUIT BREAKERS THE FOLLOWING SHALL APPLY:** ON ALL MULTI-WIRED HOMERUN CIRCUIT BREAKERS (REFER TO PLANS TO DETERMINE 2 AND/OR 3 HOMERUNS), CONTRACTOR SHALL FIELD INSTALL ON ALL MULTI-USE CIRCUIT BREAKERS APPROVED HANDLE TIE (PER CEC 210.4(B))

NOTES:

1. WITHIN SEPARATE COMPARTMENT OF PANEL BOARD PROVIDE INTERMATIC PROGRAMMABLE TIME CLOCK (INTERMATIC #ET70415CR) WITH ELECTRICALLY HELD RELAYS AND PHOTO CELL INTERFACE. CIRCUITS IDENTIFIED ON PANEL SCHEDULE TO BE CONTROLLED BY TIME CLOCK. BRANCH CIRCUITRY SHALL BE CONNECTED TO CONTACTS
2. PROVIDE WITHIN SEPARATE COMPARTMENT (1) 6 POLE AND (1) 6 POLE 20A RATED 120V ELECTRICALLY OPERATED, MECHANICALLY HELD RELAYS FOR THE CONNECTIONS AND CONTROL OF EXTERIOR LIGHTING (ON LEVEL 1 AND 2).

REFERENCE NOTES

1. PROVIDE AT ELEVATOR PIT SWITCH AND LIGHT FIXTURE WITH WIRE GUARDS AND LAMPS.
2. POWER PACK FOR MOTION SENSOR WITH DIMMING CAPABILITY.
3. PROVIDE BI-LEVEL DIMMING LED THAT WILL EASILY SWITCH FROM 100% TO 50% POWER WITH STANDARD WALL SWITCHES. PROVIDE WITH DUAL MOTION WITHOUT PHOTOCELL TO BE LOCATED IN MIDDLE OF FIXTURE AT THE FRONT SIDE. WHEN THERE IS A WINDOW PROVIDE WITH DUAL MOTION PHOTOCELL.
4. PROVIDE TOGGLE TYPE MOTOR RATED SWITCH AND CONNECT TO EXHAUST FAN AND SUPPLY FAN FOR A COMPLETE AND OPERABLE HVAC SYSTEM.

FIRST FLOOR LIGHTING PLAN

FILE NAME: H:\PROJECTS\138 CORP FOR BETTER HOUSING\24-001 - FRESNO SENIOR CENTER\1 - CAD\SENIOR CENTER PACKAGE\ELECTRICAL\E-2.1 FIRST FLOOR LIGHTING PLAN.DWG

LAST SAVED: GDUMDUM | BY: FITA TUTOE

PLOT STYLE: BREEN DESIGN GROUP.STB | PLOT SCALE: 1:1

DATE PLOTTED: 6/4/2024 10:41 PM

ORIGINAL SIZE: ARCH FULL BLEED E1 (30.00 X 42.00 INCHES)

Y&M Architects

Y&M Architects
255 South Santa Fe Avenue, Suite 103
Los Angeles, CA 90012
Telephone: 213 623 2107
www.ymarch.com

DRAWN BY	JM, FT
DESIGNED BY	CVK, FT, JM
CHECKED BY	CVK, FT, AA
APPROVED BY	DM

BREEN DESIGN GROUP
3625 DEL AMO BOULEVARD
TORRANCE, CA 90503
PH: 310 464 8404
WWW.BREENDESIGN.COM

REGISTERED PROFESSIONAL ENGINEER DIEMOND NATHAN NO. E20642 EXP. 03-31-26 ELECTRICAL STATE OF CALIFORNIA

FRESNO SENIOR CENTER

Integrated Community Development

Project. *

Developer. 20750 Ventura Boulevard, Suite 155 Woodland Hills, CA 91364

Project No.: 138-24-001

Scale: 1/8" = 1'-0"

06.11.24 — Date

E-2.1 — Page

COPYRIGHT ©2024 BREEN DESIGN GROUP

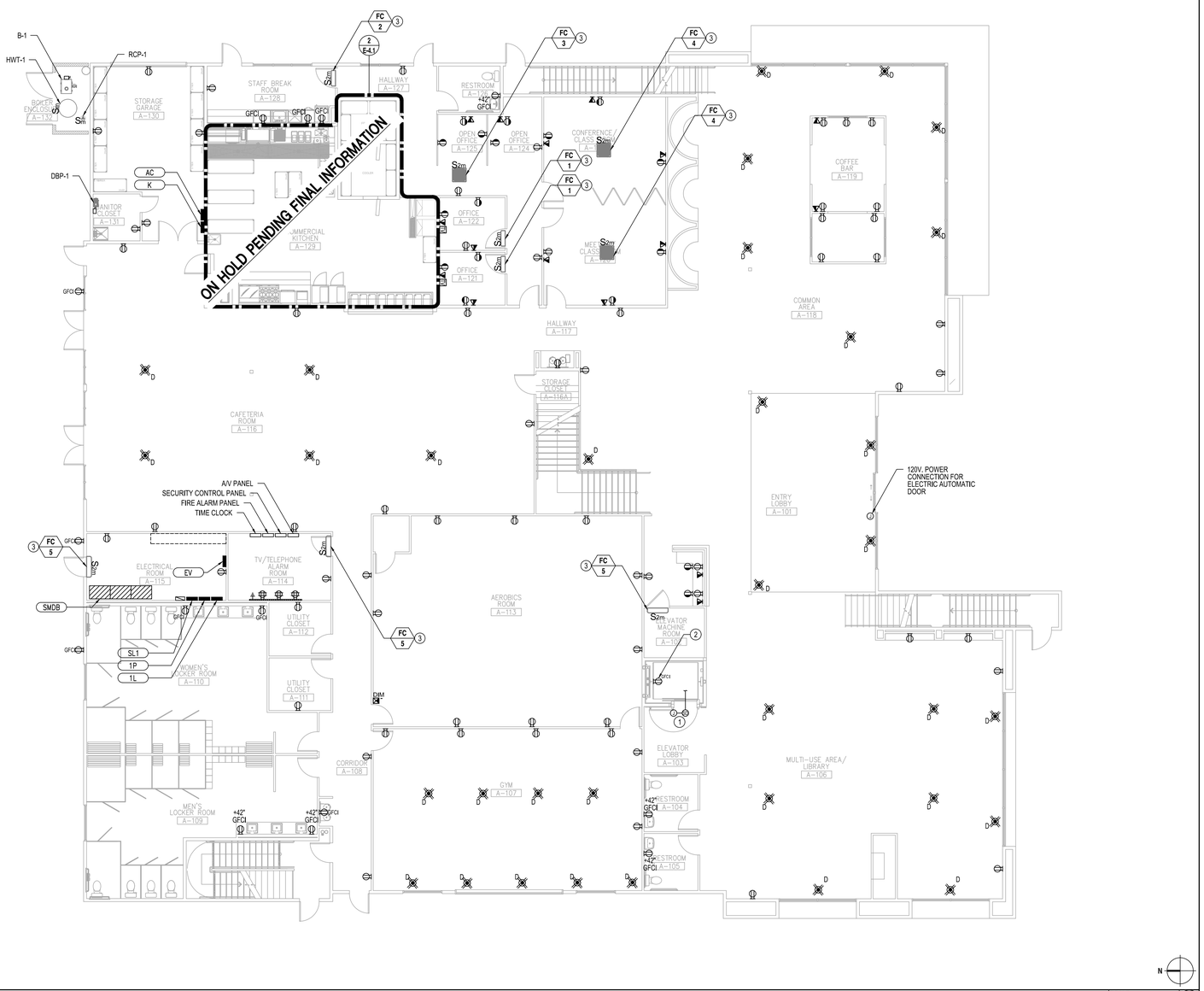

ELECTRICAL FIRST FLOOR PLAN

SCALE: 1/8" = 1' - 0" (1)

PANEL "1P"

120/208 **VOLTS** — 3 **PHASE** — 4 **WIRE**

LOCATION SENIOR BLDG (1ST FL. EQ. RM.)

FEEDER

MAIN BKR: M.L.O. — **BRACE** 22,000 **AIC** — 225A **BUSSING**

ENTER CAB'T. AT BOTTOM — SURFACE **MTG.**

REMARKS	BKR. TYPE	LOCATION	VOLT AMPS ϕA	ϕB	ϕC	LTG or LCL	REC	MIS	CIR	BKR		BKR	CIR	MIS	REC	LTG or LCL	VOLT AMPS ϕA	ϕB	ϕC	LOCATION	BKR. TYPE	REMARKS
–	–	SPARE	0			–	–	–	1	20/1		20/1	2	–	–	–	0			SPARE	–	–
–	–	SPARE		0		–	–	–	3	20/1		20/1	4	–	–	–		0		SPARE	–	–
–	–	SPARE			0	–	–	–	5	20/1		20/1	6	–	–	–			0	SPARE	–	–
–	–	SPARE	0			–	–	–	7	20/1		20/1	8	–	–	–	0			SPARE	–	–
–	–	SPARE		0		–	–	–	9	20/1		20/1	10	–	–	–		0		SPARE	–	–
–	–	SPARE			0	–	–	–	11	20/1		20/1	12	–	–	–			0	SPARE	–	–
–	–	SPARE	0			–	–	–	13	20/1		20/1	14	–	–	–	0			SPARE	–	–
–	–	SPARE		0		–	–	–	15	20/1		20/1	16	–	–	–		0		SPARE	–	–
–	–	SPARE			0	–	–	–	17	20/1		20/1	18	–	–	–			0	SPARE	–	–
–	–	SPACE	–			–	–	–	19	–		–	20	–	–	–	–			SPACE	–	–
–	–	SPACE		–		–	–	–	21	–		–	22	–	–	–		–		SPACE	–	–
–	–	SPACE			–	–	–	–	23	–		–	24	–	–	–			–	SPACE	–	–
–	–	SPACE	–			–	–	–	25	–		–	26	–	–	–	–			SPACE	–	–
–	–	SPACE		–		–	–	–	27	–		–	28	–	–	–		–		SPACE	–	–
–	–	SPACE			–	–	–	–	29	–		–	30	–	–	–			–	SPACE	–	–
–	–	SPACE	–			–	–	–	31	–		–	32	–	–	–	–			SPACE	–	–
–	–	SPACE		–		–	–	–	33	–		–	34	–	–	–		–		SPACE	–	–
–	–	SPACE			–	–	–	–	35	–		–	36	–	–	–			–	SPACE	–	–
–	–	SPACE	–			–	–	–	37	–		–	38	–	–	–	–			SPACE	–	–
–	–	SPACE		–		–	–	–	39	–		–	40	–	–	–		–		SPACE	–	–
–	–	SPACE			–	–	–	–	41	–		–	42	–	–	–			–	SPACE	–	–
–	–																				–	–

ϕA= 0 VA ϕB= 0 VA ϕC= 0 VA

TOTAL CONNECTED LOAD: 0 VA OR 0.0 AMPS @ 208 VOLTS – 3 ø

LCL: 0 VA x 125% = 0 VA

FDL: 0 VA OR 0.0 AMPS

HACR = HACR TYPE CIRCUIT BREAKER L/O = PROVIDE LOCK-OFF DEVICE ON CIRCUIT BREAKER AFCI = ARC FAULT INTERRUPTING TYPE CIRCUIT BREAKER

GFCI = GROUND FAULT INTERRUPTING TYPE CIRCUIT BREAKER

(H) **ALL PANEL BOARD BRANCH CIRCUIT BREAKERS THE FOLLOWING SHALL APPLY:** ON ALL MULTI-WIRED HOMERUN CIRCUIT BREAKERS (REFER TO PLANS TO DETERMINE 2 AND/OR 3 HOMERUNS), CONTRACTOR SHALL FIELD INSTALL ON ALL MULTI-USE CIRCUIT BREAKERS APPROVED HANDLE TIE (PER CEC 210.4(B))

NOTES:

1. WITHIN SEPARATE COMPARTMENT OF PANEL BOARD PROVIDE INTERMATIC PROGRAMMABLE TIME CLOCK (INTERMATIC #ET70415CR) WITH ELECTRICALLY HELD RELAYS AND PHOTO CELL INTERFACE. CIRCUITS IDENTIFIED ON PANEL SCHEDULE TO BE CONTROLLED BY TIME CLOCK. BRANCH CIRCUITRY SHALL BE CONNECTED TO CONTACTS
2. PROVIDE WITHIN SEPARATE COMPARTMENT (1) 6 POLE AND (1) 6 POLE 20A RATED 120V ELECTRICALLY OPERATED, MECHANICALLY HELD RELAYS FOR THE CONNECTIONS AND CONTROL OF EXTERIOR LIGHTING (ON LEVEL 1 AND 2).

GENERAL NOTES

1. ELECTRICAL EQUIPMENT SHALL BE LISTED BY A CITY OF FRESNO RECOGNIZED ELECTRICAL TESTING LABORATORY OR APPROVAL BY THE DEPARTMENT OF BUILDING AND SAFETY.
2. NO PIPING DUCTS OR EQUIPMENT FOREIGN TO ELECTRICAL EQUIPMENT SHALL BE PERMITTED TO BE LOCATED ABOVE THE ELECTRICAL EQUIPMENT.
3. VERIFY & COORDINATE EXACT LOCATION OF MECHANICAL & PLUMBING EQUIPMENT WITH MECHANICAL & PLUMBING DRAWINGS RESPECTIVELY.
4. MULTIWIRE BRANCH CIRCUITS SHALL SIMULTANEOUSLY DISCONNECT ALL UNGROUNDED CONDUCTORS AT POINT WHERE THE BRANCH CIRCUITS ORIGINATES BY THE BRANCH - CIRCUIT OVERCURRENT DEVICE.
5. ALL HOME RUNS SHOWN ON THE DRAWINGS SHALL NOT BE COMBINED WITH LARGER CONDUIT UNLESS SHOWN.
6. ALL HOME RUNS SHOWN ON THE DRAWINGS SHALL NOT BE COMBINED WITH LARGER CONDUIT UNLESS SHOWN.

REFERENCE NOTES

1. PROVIDE 120V FOR ELEVATOR SMOKE DOOR RELEASE, SMOKE CURTAINS AND CONNECT TO CIRCUIT 1P-4. VERIFY AND COORDINATE EXACT LOCATION WITH THE ARCHITECT.
2. PROVIDE A 15A OR 20A 120VAC, GROUND FAULT CIRCUIT INTERRUPTED TYPE DUPLEX RECEPTACLE RATED AT ELEVATOR PIT.
3. PROVIDE TOGGLE TYPE MOTOR RATED SWITCH AND CONNECT TO FAN COIL UNIT FOR A COMPLETE AND OPERABLE HVAC SYSTEM.

FILE NAME: H:\PROJECTS\138 CORP FOR BETTER HOUSING\24-001 - FRESNO SENIOR CENTER\01 - CAD\SENIOR CENTER PACKAGE\ELECTRICAL\E-2.1.1 FIRST FLOOR POWER AND SIGNAL PLAN.DWG

LAST SAVED: FITUTOE

PLOT STYLE: BREEN DESIGN GROUP.STB

BY: FITA TUTOE

PLOT SCALE: 1:1

DATE PLOTTED: 5/17/2022 4:43 PM

ORIGINAL SIZE: ARCH FULL BLEED E1 (30.00 X 42.00 INCHES)

FIRST FLOOR POWER AND SIGNAL PLAN

Y&M Architects

Y&M Architects
255 South Santa Fe Avenue, Suite 103
Los Angeles, CA 90012
Telephone: 213 623 2107
www.ymarch.com

DRAWN BY	JM, FT
DESIGNED BY	CVK, FT, JM
CHECKED BY	CVK, FT, AA
APPROVED BY	DM

BREEN DESIGN GROUP
3825 DEL AMO BOULEVARD
TORRANCE, CA 90503
PH: 310 464 8404
WWW.BREENDESIGN.COM

REGISTERED PROFESSIONAL ENGINEER — DIAMOND MAHONEY — NO. E20642 — EXP. 03-31-26 — ELECTRICAL — STATE OF CALIFORNIA

FRESNO SENIOR CENTER

Integrated Community Development

06.11.24 **E-2.1.1**

Project. * | **Developer.** 20750 Ventura Boulevard, Suite 155, Woodland Hills, CA 91364 | **Project No.:** 138-24-001 | **Scale:** 1/8" = 1'-0" | **Date** | **Page**

COPYRIGHT ©2024 BREEN DESIGN GROUP

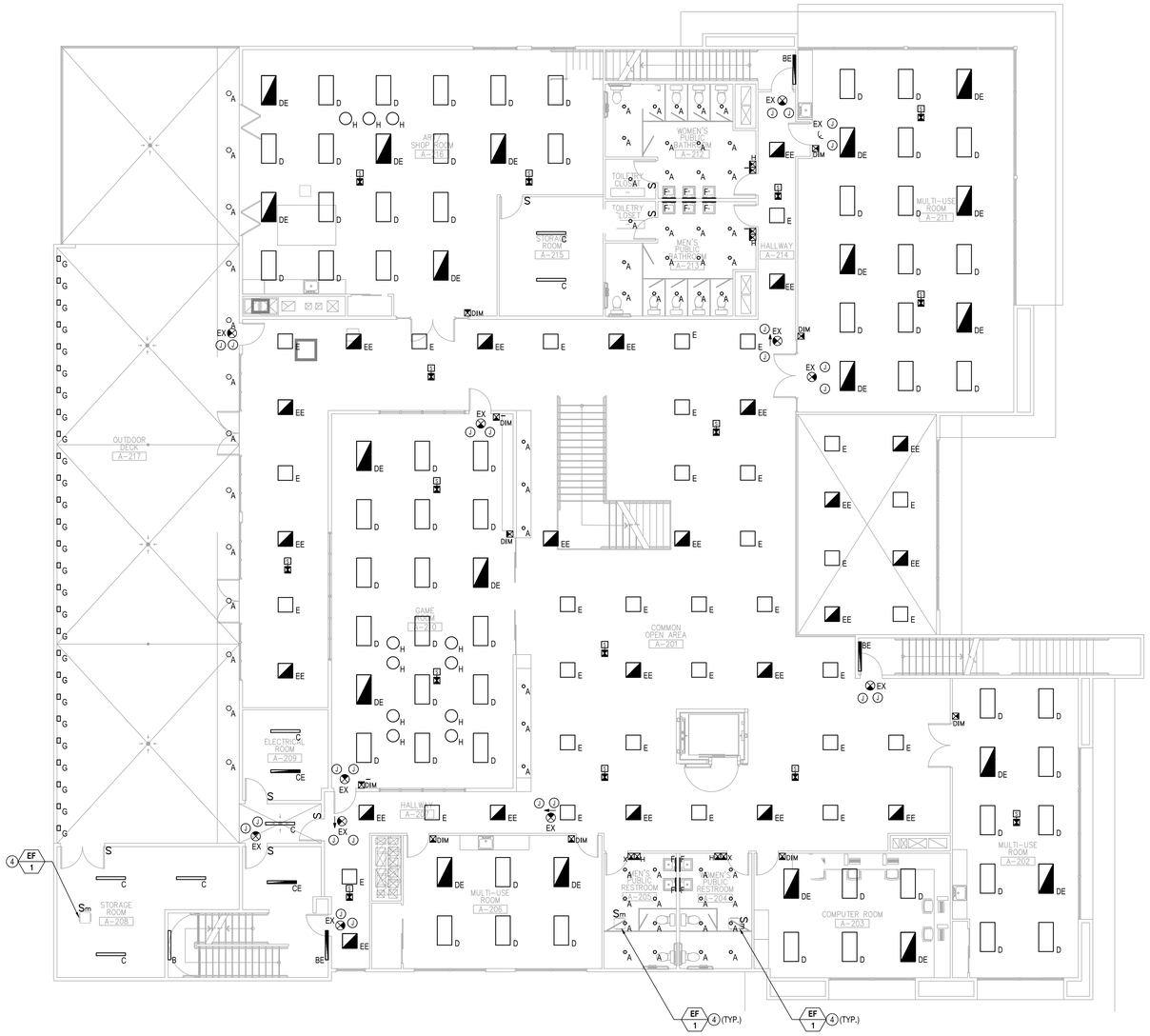

2ND FLOOR ELECTRICAL PLAN

SCALE: 1/8" = 1'-0"

1

PANEL "2L"

120/208 **VOLTS** | 3 **PHASE** | 4 **WIRE**

LOCATION SENIOR BLDG (2ND FL. EQ. RM.)

FEEDER

MAIN BKR: M.L.O. | **BRACE** 22,000 **AIC** | 225A **BUSSING**

ENTER CAB'T. AT BOTTOM | SURFACE **MTG.**

REMARKS	BKR. TYPE	LOCATION	VOLT AMPS Φ A	VOLT AMPS Φ B	VOLT AMPS Φ C	LTG or LCL	REC	MIS	CIR	BKR		BKR	CIR	MIS	REC	LTG or LCL	VOLT AMPS Φ A	VOLT AMPS Φ B	VOLT AMPS Φ C	LOCATION	BKR. TYPE	REMARKS
–	–	SPARE	0			–	–	–	1	20/1		20/1	2	–	–	–	0			SPARE	–	–
–	–	SPARE		0		–	–	–	3	20/1		20/1	4	–	–	–		0		SPARE	–	–
–	–	SPARE			0	–	–	–	5	20/1		20/1	6	–	–	–			0	SPARE	–	–
–	–	SPARE	0			–	–	–	7	20/1		20/1	8	–	–	–	0			SPARE	–	–
–	–	SPARE		0		–	–	–	9	20/1		20/1	10	–	–	–		0		SPARE	–	–
–	–	SPARE			0	–	–	–	11	20/1		20/1	12	–	–	–			0	SPARE	–	–
–	–	SPARE	0			–	–	–	13	20/1		20/1	14	–	–	–	0			SPARE	–	–
–	–	SPARE		0		–	–	–	15	20/1		20/1	16	–	–	–		0		SPARE	–	–
–	–	SPARE			0	–	–	–	17	20/1		20/1	18	–	–	–			0	SPARE	–	–
–	–	SPACE	–			–	–	–	19	–		–	20	–	–	–	–			SPACE	–	–
–	–	SPACE		–		–	–	–	21	–		–	22	–	–	–		–		SPACE	–	–
–	–	SPACE			–	–	–	–	23	–		–	24	–	–	–			–	SPACE	–	–
–	–	SPACE	–			–	–	–	25	–		–	26	–	–	–	–			SPACE	–	–
–	–	SPACE		–		–	–	–	27	–		–	28	–	–	–		–		SPACE	–	–
–	–	SPACE			–	–	–	–	29	–		–	30	–	–	–			–	SPACE	–	–
–	–	SPACE	–			–	–	–	31	–		–	32	–	–	–	–			SPACE	–	–
–	–	SPACE		–		–	–	–	33	–		–	34	–	–	–		–		SPACE	–	–
–	–	SPACE			–	–	–	–	35	–		–	36	–	–	–			–	SPACE	–	–
–	–	SPACE	–			–	–	–	37	–		–	38	–	–	–	–			SPACE	–	–
–	–	SPACE		–		–	–	–	39	–		–	40	–	–	–		–		SPACE	–	–
–	–	SPACE			–	–	–	–	41	–		–	42	–	–	–			–	SPACE	–	–
–	–																					

Φ A= 0 VA | Φ B= 0 VA | Φ C= 0 VA

TOTAL CONNECTED LOAD: 0 VA OR 0.0 AMPS @ 208 VOLTS – 3 Ø

LCL: 0 VA x 125% = 0 VA

FDL: 0 VA OR 0.0 AMPS

HACR = HACR TYPE CIRCUIT BREAKER L/O = PROVIDE LOCK–OFF DEVICE ON CIRCUIT BREAKER AFCI = ARC FAULT INTERRUPTING TYPE CIRCUIT BREAKER

GFCI = GROUND FAULT INTERRUPTING TYPE CIRCUIT BREAKER

(1) **ALL PANEL BOARD BRANCH CIRCUIT BREAKERS THE FOLLOWING SHALL APPLY:** ON ALL MULTI–WIRED HOMERUN CIRCUIT BREAKERS (REFER TO PLANS TO DETERMINE 2 AND/OR 3 HOMERUNS), CONTRACTOR SHALL FIELD INSTALL ON ALL MULTI–USE CIRCUIT BREAKERS APPROVED HANDLE TIE (PER CEC 210.4(B))

NOTES:

1. WITHIN SEPARATE COMPARTMENT OF PANEL BOARD PROVIDE INTERMATIC PROGRAMMABLE TIME CLOCK (INTERMATIC #ET70415CR) WITH ELECTRICALLY HELD RELAYS AND PHOTO CELL INTERFACE. CIRCUITS IDENTIFIED ON PANEL SCHEDULE TO BE CONTROLLED BY TIME CLOCK. BRANCH CIRCUITRY SHALL BE CONNECTED TO CONTACTS
2. PROVIDE WITHIN SEPARATE COMPARTMENT (1) 6 POLE AND (1) 6 POLE 20A RATED 120V ELECTRICALLY OPERATED, MECHANICALLY HELD RELAYS FOR THE CONNECTIONS AND CONTROL OF EXTERIOR LIGHTING (ON LEVEL 1 AND 2).

REFERENCE NOTES

1. PROVIDE AT ELEVATOR PIT SWITCH AND LIGHT FIXTURE WITH WIRE GUARDS AND LAMPS. PHILIPS MODEL # (VFN26CUW-LP-PG).
2. POWER PACK FOR MOTION SENSOR WITH DIMMING CAPABILITY.
3. PROVIDE BI-LEVEL DIMMING LED THAT WILL EASILY SWITCH FROM 100% TO 50% POWER WITH STANDARD WALL SWITCHES. PROVIDE WITH DUAL MOTION WITHOUT PHOTOCELL TO BE LOCATED IN MIDDLE OF FIXTURE AT THE FRONT SIDE. WHEN THERE IS A WINDOW PROVIDE WITH DUAL MOTION PHOTOCELL.
4. PROVIDE TOGGLE TYPE MOTOR RATED SWITCH AND CONNECT TO EXHAUST FAN FOR A COMPLETE AND OPERABLE HVAC SYSTEM.

SECOND FLOOR LIGHTING PLAN

FILE NAME: H:\PROJECTS\138 CORP FOR BETTER HOUSING\24-001 - FRESNO SENIOR CENTER\PACKAGE\ELECTRICAL\E-2.2 SECOND FLOOR LIGHTING PLAN.DWG

LAST SAVED: GDUMOUM

PLOT STYLE: BREEN DESIGN GROUP.STB

BY: FITA TUTOE

PLOT SCALE: 1:1

DATE PLOTTED: 6/5/2024 1:15 AM

ORIGINAL SIZE: ARCH FULL BLEED E1 (30.00 X 42.00 INCHES)

Y&M Architects

Y&M Architects
255 South Santa Fe Avenue, Suite 103
Los Angeles, CA 90012
Telephone: 213 623 2107
www.ymarch.com

DRAWN BY	JM, FT
DESIGNED BY	CVK, FT, JM
CHECKED BY	CVK, FT, AA
APPROVED BY	DM

BREEN DESIGN GROUP
3825 DEL AMO BOULEVARD
TORRANCE, CA 90503
PH: 310 464 8404
WWW.BREENDESIGN.COM

REGISTERED PROFESSIONAL ENGINEER DESMOND MAYNORD NO. E20642 EXP. 03-31-26 ELECTRICAL STATE OF CALIFORNIA

FRESNO SENIOR CENTER

Integrated Community Development

Project. *	Developer. 20750 Ventura Boulevard, Suite 155 Woodland Hills, CA 91364	Project No.: 138-24-001	Scale: 1/8" = 1'-0"	Date 06.11.24	Page E-2.2

COPYRIGHT ©2024 BREEN DESIGN GROUP

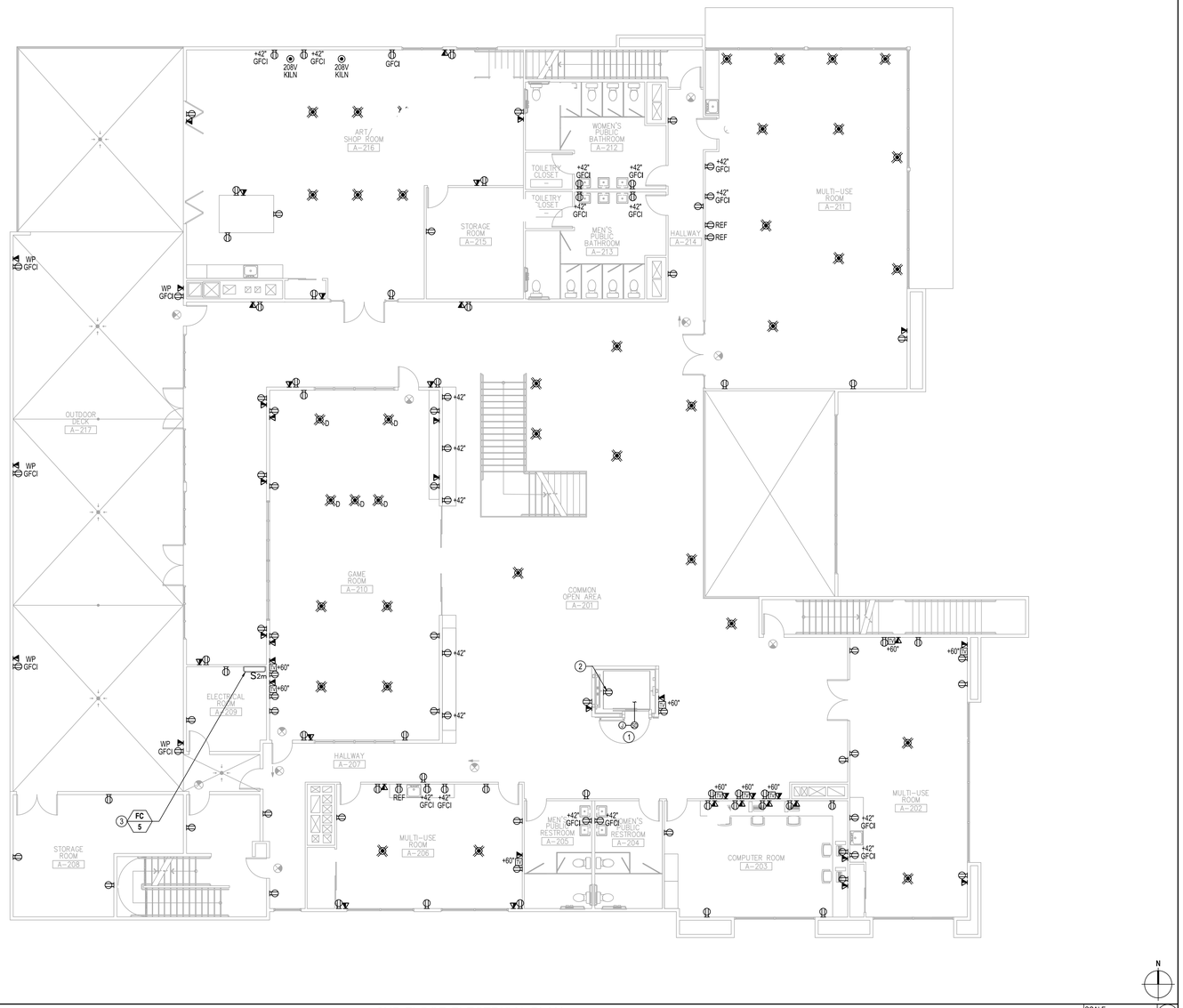

2ND FLOOR ELECTRICAL PLAN

SCALE: 1/8" = 1'-0"

1

PANEL "2L"

120/208 **VOLTS** | 3 **PHASE** | 4 **WIRE**

LOCATION SENIOR BLDG (2ND FL. EQ. RM.) | **FEEDER**

MAIN BKR: M.L.O. | 225A **BUSSING** | **ENTER CAB'T. AT** BOTTOM

BRACE 22,000 **AIC** | SURFACE **MTG.**

REMARKS	BKR. TYPE	LOCATION	VOLT AMPS ϕA	ϕB	ϕC	LTG or LCL	REC	MIS	CIR	BKR		BKR	CIR	MIS	REC	LTG or LCL	VOLT AMPS ϕA	ϕB	ϕC	LOCATION	BKR. TYPE	REMARKS
–	–	SPARE	0			–	–	–	1	20/1		20/1	2	–	–	–	0			SPARE	–	–
–	–	SPARE		0		–	–	–	3	20/1		20/1	4	–	–	–		0		SPARE	–	–
–	–	SPARE			0	–	–	–	5	20/1		20/1	6	–	–	–			0	SPARE	–	–
–	–	SPARE	0			–	–	–	7	20/1		20/1	8	–	–	–	0			SPARE	–	–
–	–	SPARE		0		–	–	–	9	20/1		20/1	10	–	–	–		0		SPARE	–	–
–	–	SPARE			0	–	–	–	11	20/1		20/1	12	–	–	–			0	SPARE	–	–
–	–	SPARE	0			–	–	–	13	20/1		20/1	14	–	–	–	0			SPARE	–	–
–	–	SPARE		0		–	–	–	15	20/1		20/1	16	–	–	–		0		SPARE	–	–
–	–	SPARE			0	–	–	–	17	20/1		20/1	18	–	–	–			0	SPARE	–	–
–	–	SPACE	–			–	–	–	19	–		–	20	–	–	–	–			SPACE	–	–
–	–	SPACE		–		–	–	–	21	–		–	22	–	–	–		–		SPACE	–	–
–	–	SPACE			–	–	–	–	23	–		–	24	–	–	–			–	SPACE	–	–
–	–	SPACE	–			–	–	–	25	–		–	26	–	–	–	–			SPACE	–	–
–	–	SPACE		–		–	–	–	27	–		–	28	–	–	–		–		SPACE	–	–
–	–	SPACE			–	–	–	–	29	–		–	30	–	–	–			–	SPACE	–	–
–	–	SPACE	–			–	–	–	31	–		–	32	–	–	–	–			SPACE	–	–
–	–	SPACE		–		–	–	–	33	–		–	34	–	–	–		–		SPACE	–	–
–	–	SPACE			–	–	–	–	35	–		–	36	–	–	–			–	SPACE	–	–
–	–	SPACE	–			–	–	–	37	–		–	38	–	–	–	–			SPACE	–	–
–	–	SPACE		–		–	–	–	39	–		–	40	–	–	–		–		SPACE	–	–
–	–	SPACE			–	–	–	–	41	–		–	42	–	–	–			–	SPACE	–	–
–	–																				–	–

ϕA= 0 VA | ϕB= 0 VA | ϕC= 0 VA

TOTAL CONNECTED LOAD: 0 VA OR 0.0 AMPS @ 208 VOLTS – 3 ø

LCL: 0 VA x 125% = 0 VA

FDL: 0 VA OR 0.0 AMPS

HACR = HACR TYPE CIRCUIT BREAKER L/O = PROVIDE LOCK–OFF DEVICE ON CIRCUIT BREAKER AFCI = ARC FAULT INTERRUPTING TYPE CIRCUIT BREAKER

GFCI = GROUND FAULT INTERRUPTING TYPE CIRCUIT BREAKER

(R) **ALL PANEL BOARD BRANCH CIRCUIT BREAKERS THE FOLLOWING SHALL APPLY:** ON ALL MULTI–WIRED HOMERUN CIRCUIT BREAKERS (REFER TO PLANS TO DETERMINE 2 AND/OR 3 HOMERUNS), CONTRACTOR SHALL FIELD INSTALL ON ALL MULTI–USE CIRCUIT BREAKERS APPROVED HANDLE TIE (PER CEC 210.4(B))

NOTES:

1. WITHIN SEPARATE COMPARTMENT OF PANEL BOARD PROVIDE INTERMATIC PROGRAMMABLE TIME CLOCK (INTERMATIC #CT704115CR) WITH ELECTRICALLY HELD RELAYS AND PHOTO CELL INTERFACE. CIRCUITS IDENTIFIED ON PANEL SCHEDULE TO BE CONTROLLED BY TIME CLOCK. BRANCH CIRCUITRY SHALL BE CONNECTED TO CONTACTS
2. PROVIDE WITHIN SEPARATE COMPARTMENT (1) 6 POLE AND (1) 6 POLE 20A RATED 120V ELECTRICALLY OPERATED, MECHANICALLY HELD RELAYS FOR THE CONNECTIONS AND CONTROL OF EXTERIOR LIGHTING (ON LEVEL 1 AND 2).

PANEL "2P"

120/208 **VOLTS** | 3 **PHASE** | 4 **WIRE**

LOCATION SENIOR BLDG (2ND FL.) | **FEEDER**

MAIN BKR: M.L.O. | 225A **BUSSING** | **ENTER CAB'T. AT** BOTTOM

BRACE 22,000 **AIC** | FLUSH **MTG.**

REMARKS	BKR. TYPE	LOCATION	VOLT AMPS ϕA	ϕB	ϕC	LTG or LCL	REC	MIS	CIR	BKR		BKR	CIR	MIS	REC	LTG or LCL	VOLT AMPS ϕA	ϕB	ϕC	LOCATION	BKR. TYPE	REMARKS
–	–	SPARE	0			–	–	–	1	20/1		20/1	2	–	–	–	0			SPARE	–	–
–	–	SPARE		0		–	–	–	3	20/1		20/1	4	–	–	–		0		SPARE	–	–
–	–	SPARE			0	–	–	–	5	20/1		20/1	6	–	–	–			0	SPARE	–	–
–	–	SPARE	0			–	–	–	7	20/1		20/1	8	–	–	–	0			SPARE	–	–
–	–	SPARE		0		–	–	–	9	20/1		20/1	10	–	–	–		0		SPARE	–	–
–	–	SPARE			0	–	–	–	11	20/1		20/1	12	–	–	–			0	SPARE	–	–
–	–	SPARE	0			–	–	–	13	20/1		20/1	14	–	–	–	0			SPARE	–	–
–	–	SPARE		0		–	–	–	15	20/1		20/1	16	–	–	–		0		SPARE	–	–
–	–	SPARE			0	–	–	–	17	20/1		20/1	18	–	–	–			0	SPARE	–	–
–	–	SPACE	–			–	–	–	19	–		–	20	–	–	–	–			SPACE	–	–
–	–	SPACE		–		–	–	–	21	–		–	22	–	–	–		–		SPACE	–	–
–	–	SPACE			–	–	–	–	23	–		–	24	–	–	–			–	SPACE	–	–
–	–	SPACE	–			–	–	–	25	–		–	26	–	–	–	–			SPACE	–	–
–	–	SPACE		–		–	–	–	27	–		–	28	–	–	–		–		SPACE	–	–
–	–	SPACE			–	–	–	–	29	–		–	30	–	–	–			–	SPACE	–	–
–	–	SPACE	–			–	–	–	31	–		–	32	–	–	–	–			SPACE	–	–
–	–	SPACE		–		–	–	–	33	–		–	34	–	–	–		–		SPACE	–	–
–	–	SPACE			–	–	–	–	35	–		–	36	–	–	–			–	SPACE	–	–
–	–	SPACE	–			–	–	–	37	–		–	38	–	–	–	–			SPACE	–	–
–	–	SPACE		–		–	–	–	39	–		–	40	–	–	–		–		SPACE	–	–
–	–	SPACE			–	–	–	–	41	–		–	42	–	–	–			–	SPACE	–	–
–	–																				–	–

ϕA= 0 VA | ϕB= 0 VA | ϕC= 0 VA

TOTAL CONNECTED LOAD: 0 VA OR 0.0 AMPS @ 208 VOLTS – 3 ø

LCL: 0 VA x 125% = 0 VA

FDL: 0 VA OR 0.0 AMPS

HACR = HACR TYPE CIRCUIT BREAKER L/O = PROVIDE LOCK–OFF DEVICE ON CIRCUIT BREAKER AFCI = ARC FAULT INTERRUPTING TYPE CIRCUIT BREAKER

GFCI = GROUND FAULT INTERRUPTING TYPE CIRCUIT BREAKER

(R) **ALL PANEL BOARD BRANCH CIRCUIT BREAKERS THE FOLLOWING SHALL APPLY:** ON ALL MULTI–WIRED HOMERUN CIRCUIT BREAKERS (REFER TO PLANS TO DETERMINE 2 AND/OR 3 HOMERUNS), CONTRACTOR SHALL FIELD INSTALL ON ALL MULTI–USE CIRCUIT BREAKERS APPROVED HANDLE TIE (PER CEC 210.4(B))

GENERAL NOTES

1. ELECTRICAL EQUIPMENT SHALL BE LISTED BY A CITY OF FRESNO RECOGNIZED ELECTRICAL TESTING LABORATORY OR APPROVAL BY THE DEPARTMENT OF BUILDING AND SAFETY.
2. NO PIPING DUCTS OR EQUIPMENT FOREIGN TO ELECTRICAL EQUIPMENT SHALL BE PERMITTED TO BE LOCATED ABOVE THE ELECTRICAL EQUIPMENT.
3. VERIFY & COORDINATE EXACT LOCATION OF MECHANICAL & PLUMBING EQUIPMENT WITH MECHANICAL & PLUMBING DRAWINGS RESPECTIVELY.
4. MULTIWIRE BRANCH CIRCUITS SHALL SIMULTANEOUSLY DISCONNECT ALL UNGROUNDED CONDUCTORS AT POINT WHERE THE BRANCH CIRCUITS ORIGINATES BY THE BRANCH - CIRCUIT OVERCURRENT DEVICE.
5. ALL HOME RUNS SHOWN ON THE DRAWINGS SHALL NOT BE COMBINED WITH LARGER CONDUIT UNLESS SHOWN.
6. ALL HOME RUNS SHOWN ON THE DRAWINGS SHALL NOT BE COMBINED WITH LARGER CONDUIT UNLESS SHOWN.

REFERENCE NOTES

1. PROVIDE 120V FOR ELEVATOR SMOKE DOOR RELEASE, SMOKE CURTAINS AND CONNECT TO CIRCUIT HP-XX. VERIFY AND COORDINATE EXACT LOCATION WITH THE ARCHITECT.
2. PROVIDE A 15A OR 20A 120VAC, GROUND FAULT CIRCUIT INTERRUPTED TYPE DUPLEX RECEPTACLE RATED AT ELEVATOR PIT.
3. PROVIDE TOGGLE TYPE MOTOR RATED SWITCH AND CONNECT TO FAN COIL UNIT FOR A COMPLETE AND OPERABLE HVAC SYSTEM.

SECOND FLOOR POWER AND SIGNAL PLAN

FILE NAME: H:\PROJECTS\138 CORP FOR BETTER HOUSING\24-001 - FRESNO SENIOR CENTER\01 - CAD\SENIOR CENTER PACKAGE\ELECTRICAL\E-2.2.1 SECOND FLOOR POWER AND SIGNAL PLAN.DWG

LAST SAVED: FITUTOE | PLOT STYLE: BREEN DESIGN GROUP.STB

BY: FITA TUTOE | PLOT SCALE: 1:1

DATE PLOTTED: 6/5/2024 1:26 AM | ORIGINAL SIZE: ARCH FULL BLEED E1 (30.00 X 42.00 INCHES)

Y&M Architects

Y&M Architects
255 South Santa Fe Avenue, Suite 103
Los Angeles, CA 90012
Telephone: 213 623 2107
www.ymarch.com

DRAWN BY	JM, FT
DESIGNED BY	CVK, FT, JM
CHECKED BY	CVK, FT, AA
APPROVED BY	DM

BREEN DESIGN GROUP
3825 DEL AMO BOULEVARD
TORRANCE, CA 90503
PH: 310 464 8404
WWW.BREENDESIGN.COM

REGISTERED PROFESSIONAL ENGINEER DIAMOND MAHONEY NO. E20642 EXP. 03-31-26 ELECTRICAL STATE OF CALIFORNIA

COPYRIGHT ©2024 BREEN DESIGN GROUP

FRESNO SENIOR CENTER

Integrated Community Development

Project. *	Developer. 20750 Ventura Boulevard, Suite 155 Woodland Hills, CA 91364	Project No.: 138-24-001	Scale: 1/8" = 1'-0"	Date 06.11.24	Page E-2.2.1

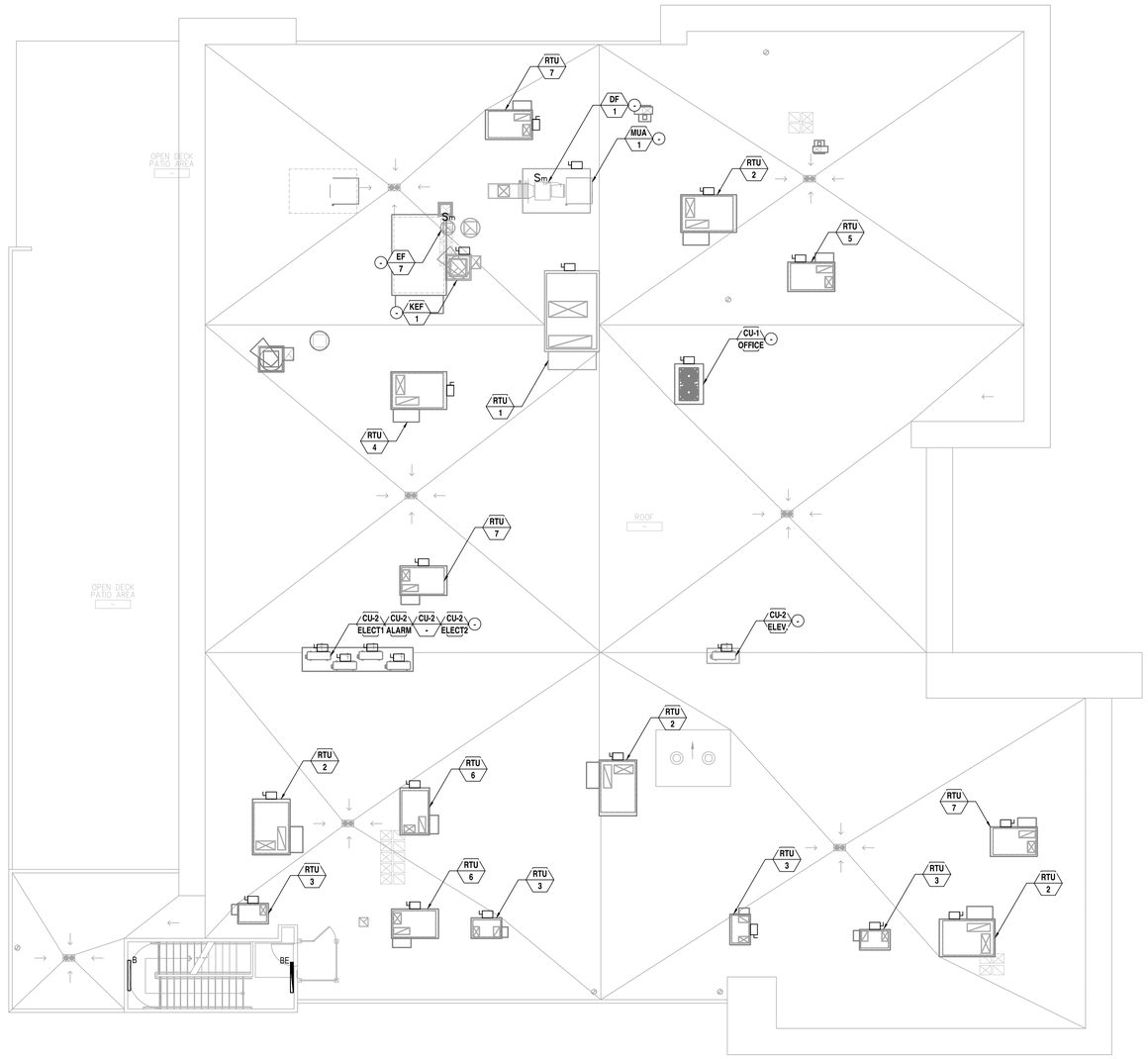

ELECTRICAL ROOF PLAN

SCALE: 1/8" = 1'-0"

1

ELECTRICAL ROOF PLAN

GENERAL NOTES

1. ELECTRICAL EQUIPMENT SHALL BE LISTED BY A CITY OF FRESNO TO RECOGNIZED ELECTRICAL TESTING LABORATORY OR APPROVAL BY THE DEPARTMENT OR BUILDING AND SAFETY.
2. NO PIPING DUCTS OR EQUIPMENT FOREIGN TO ELECTRICAL EQUIPMENT SHALL BE PERMITTED TO BE LOCATED ABOVE THE ELECTRICAL EQUIPMENT.
3. EACH SERVICE DISCONNECT SHALL BE PERMANENTLY MARKED TO IDENTIFY IT AS A SERVICE DISCONNECT.
4. ALL ELECTRICAL ROOM PERSONNEL DOORS SHALL OPEN IN THE DIRECTION OF EGRESS AND BE EQUIPPED WITH PANIC BARS, PRESSURE PLATES OR OTHER DEVICES THAT ARE NORMALLY LATCHED BUT OPEN UNDER SIMPLE PRESSURE.
5. VERIFY & COORDINATE EXACT LOCATION OF MECHANICAL & PLUMBING EQUIPMENT WITH MECHANICAL & PLUMBING DRAWINGS RESPECTIVELY.
6. MULTIWIRE BRANCH CIRCUITS SHALL SIMULTANEOUSLY DISCONNECT ALL UNGROUNDED CONDUCTORS AT POINT WHERE THE BRANCH CIRCUITS ORIGINATES BY THE BRANCH - CIRCUIT OVERCURRENT DEVICE.
7. ALL HOME RUNS SHOWN ON THE DRAWINGS SHALL NOT BE COMBINED WITH LARGER CONDUIT UNLESS SHOWN.
8. CARBON MONOXIDE ALARMS SHALL RECEIVE THEIR PRIMARY POWER FROM THE BUILDING WIRING WHERE SUCH WIRING IS SERVED FROM A COMMERCIAL SOURCE AND SHALL BE EQUIPPED WITH A BATTERY BACKUP. WIRING SHALL BE PERMANENT AND WITHOUT A DISCONNECTING SWITCH OTHER THAN AS REQUIRED FOR OVERCURRENT PROTECTION.
9. PLANS SHALL INDICATE A PATHWAY FOR ROUTING OF PLUMBING FROM THE SOLAR ZONE TO THE WATER HEATING SYSTEM.
10. THE MAIN SERVICE PANEL SHALL HAVE A MINIMUM BUSBAR RATING OF 200 AMPS.
11. THE MAIN ELECTRICAL SERVICE PANEL SHALL HAVE A RESERVED SPACE TO ALLOW FOR INSTALLATION OF A DOUBLE POLE CIRCUIT BREAKER FOR A FUTURE SOLAR ELECTRIC INSTALLATION. THE RESERVED SPACE SHALL BE POSITIONED AT THE OPPOSITE (LOAD) END FROM THE INPUT FEEDER LOCATION OR MAIN CIRCUIT LOCATION AND SHALL BE PERMANENTLY MARKED AS "FOR FUTURE SOLAR ELECTRIC". (4.211.4, ENERGY CODE §110.10, LAFD REQUIREMENT NO.96)
12. IN BATHROOMS, LAUNDRY ROOMS, AND UTILITY ROOMS, AT LEAST ONE LUMINAIRE IN EACH OF THESE SPACES SHALL BE CONTROLLED BY A VACANCY SENSOR.
13. IN BATHROOMS, LAUNDRY ROOMS, AND UTILITY ROOMS, AT LEAST ONE LUMINAIRE IN EACH OF THESE SPACES SHALL BE CONTROLLED BY A VACANCY SENSOR.

REFERENCE NOTES

1. INDOOR UNIT POWERED BY OUTDOOR UNIT. REFER TO MECHANICAL SCHEDULES SHEET M-0.2 FOR ADDITIONAL INFORMATION.
2. PROVIDE ELEVATOR DISCONNECT SWITCH. REFER TO E-4.1 FOR DETAILS.

DATE PLOTTED: 6/5/2024 1:39 AM
ORIGINAL SIZE: ARCH FULL BLEED E1 (30.00 X 42.00 INCHES)
BY: FITA TUTOE
PLOT SCALE: 1:1
LAST SAVED: GDUMDUM
PLOT STYLE: BREEN DESIGN GROUP.STB
FILE NAME: H:\PROJECTS\138 CORP FOR BETTER HOUSING\24-001 - FRESNO SENIOR CENTER\01 - CAD\SENIOR CENTER PACKAGE\ELECTRICAL\E-2.3 ELECTRICAL ROOF PLAN.DWG

Y&M Architects
255 South Santa Fe Avenue, Suite 103
Los Angeles, CA 90012
Telephone: 213 623 2107
www.ymarch.com

DRAWN BY	JM, FT
DESIGNED BY	CVK, FT, JM
CHECKED BY	CVK, FT, AA
APPROVED BY	DM

BREEN DESIGN GROUP
3825 DEL AMO BOULEVARD
TORRANCE, CA 90503
PH: 310 464 8404
WWW.BREENDESIGN.COM

REGISTERED PROFESSIONAL ENGINEER DESMOND MAYNARD NO. E20642 EXP. 03-31-26 ELECTRICAL STATE OF CALIFORNIA

FRESNO SENIOR CENTER

Integrated Community Development

Project. *	Developer. 20750 Ventura Boulevard, Suite 155 Woodland Hills, CA 91364	Project No.: 138-24-001	Scale: 1/8" = 1'-0"	Date 06.11.24	Page E-2.3

COPYRIGHT ©2024 BREEN DESIGN GROUP

ELECTRICAL SYMBOLS

- JUNCTION BOX AT WALL
- JUNCTION BOX ABOVE FLOOR
- JUNCTION BOX AT CEILING
- DIRECT CONNECTION TO EQUIPMENT
- JUNCTION BOX INSTALLED IN EQUIPMENT
- DUPLEX CONVENIENCE OUTLET
- DUPLEX CONVENIENCE OUTLET (FURNISHED WITH EQUIPMENT)
- SINGLE PURPOSE POWER OUTLET (208V)
- SINGLE PURPOSE POWER OUTLET (FURNISHED WITH EQUIPMENT)
- CASH REGISTER OR PRE-CHECK OUTLET
- TELEPHONE
- SWITCH

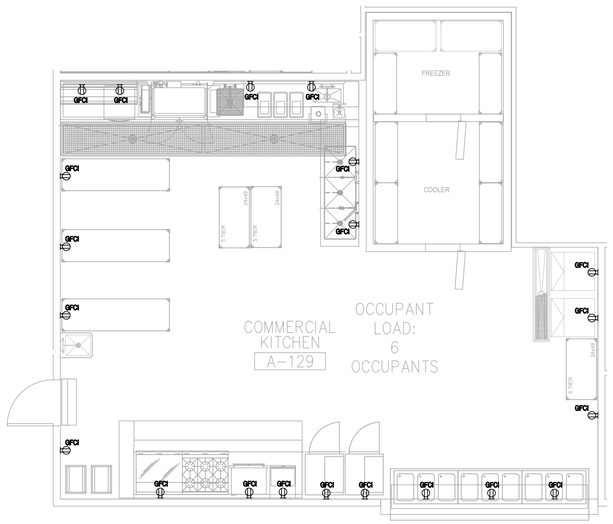

COMMERCIAL KITCHEN (FIRST FLOOR) ELECTRICAL POWER - ENLARGED PLAN

SCALE: 1/4" = 1'-0" (2)

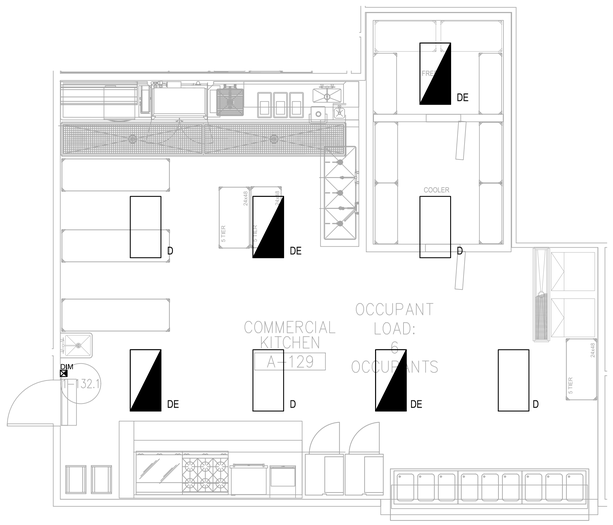

COMMERCIAL KITCHEN (FIRST FLOOR) ELECTRICAL LIGHTING - ENLARGED PLAN

SCALE: 1/4" = 1'-0" (1)

PANEL "K"

120/208 VOLTS, 3 PHASE, 4 WIRE — LOCATION: SENIOR BLDG (KITCHEN) — FEEDER — MAIN BKR: M.L.O. — ENTER CAB'T. AT: BOTTOM — BRACE: 22,000 AIC — 225A BUSSING — FLUSH MTG.

REMARKS	BKR. TYPE	LOCATION	VOLT AMPS ϕA	ϕB	ϕC	LTG or LCL	REC	MIS	CIR	BKR	BKR	CIR	MIS	REC	LTG or LCL	VOLT AMPS ϕA	ϕB	ϕC	LOCATION	BKR. TYPE	REMARKS
–	–	SPARE	0			–	–	–	1	20/1	20/1	2	–	–	–	0			SPARE	–	–
–	–	SPARE		0		–	–	–	3	20/1	20/1	4	–	–	–		0		SPARE	–	–
–	–	SPARE			0	–	–	–	5	20/1	20/1	6	–	–	–			0	SPARE	–	–
–	–	SPARE	0			–	–	–	7	20/1	20/1	8	–	–	–	0			SPARE	–	–
–	–	SPARE		0		–	–	–	9	20/1	20/1	10	–	–	–		0		SPARE	–	–
–	–	SPARE			0	–	–	–	11	20/1	20/1	12	–	–	–			0	SPARE	–	–
–	–	SPARE	0			–	–	–	13	20/1	20/1	14	–	–	–	0			SPARE	–	–
–	–	SPARE		0		–	–	–	15	20/1	20/1	16	–	–	–		0		SPARE	–	–
–	–	SPARE			0	–	–	–	17	20/1	20/1	18	–	–	–			0	SPARE	–	–
–	–	SPACE	–			–	–	–	19	–	–	20	–	–	–	–			SPACE	–	–
–	–	SPACE		–		–	–	–	21	–	–	22	–	–	–		–		SPACE	–	–
–	–	SPACE			–	–	–	–	23	–	–	24	–	–	–			–	SPACE	–	–
–	–	SPACE	–			–	–	–	25	–	–	26	–	–	–	–			SPACE	–	–
–	–	SPACE		–		–	–	–	27	–	–	28	–	–	–		–		SPACE	–	–
–	–	SPACE			–	–	–	–	29	–	–	30	–	–	–			–	SPACE	–	–
–	–	SPACE	–			–	–	–	31	–	–	32	–	–	–	–			SPACE	–	–
–	–	SPACE		–		–	–	–	33	–	–	34	–	–	–		–		SPACE	–	–
–	–	SPACE			–	–	–	–	35	–	–	36	–	–	–			–	SPACE	–	–
–	–	SPACE	–			–	–	–	37	–	–	38	–	–	–	–			SPACE	–	–
–	–	SPACE		–		–	–	–	39	–	–	40	–	–	–		–		SPACE	–	–
–	–	SPACE			–	–	–	–	41	–	–	42	–	–	–			–	SPACE	–	–
–	–																			–	–

ϕA: 0 VA ϕB: 0 VA ϕC: 0 VA

TOTAL CONNECTED LOAD: 0 VA OR 0.0 AMPS @ 208 VOLTS – 3 ø

LCL: 0 VA x 125% = 0 VA

FDL: 0 VA OR 0.0 AMPS

HACR = HACR TYPE CIRCUIT BREAKER L/O = PROVIDE LOCK-OFF DEVICE ON CIRCUIT BREAKER AFCI = ARC FAULT INTERRUPTING TYPE CIRCUIT BREAKER

GFCI = GROUND FAULT INTERRUPTING TYPE CIRCUIT BREAKER ST = SHUNT TRIP

(1) **ALL PANEL BOARD BRANCH CIRCUIT BREAKERS THE FOLLOWING SHALL APPLY:** ON ALL MULTI-WIRED HOMERUN CIRCUIT BREAKERS (REFER TO PLANS TO DETERMINE 2 AND/OR 3 HOMERUNS), CONTRACTOR SHALL FIELD INSTALL ON ALL MULTI-USE CIRCUIT BREAKERS APPROVED HANDLE TIE (PER CEC 210.4(B))

NOTES:
1. SHUNT TRIP TO INTERCONNECTED WITH KITCHEN EXHAUST HOOD SYSTEM ANSUL SUPPRESSION EQUIPMENT FOR MAKE-UP AIR FAN SHUT DOWN.

PANEL "AC"

120/208 VOLTS, 3 PHASE, 4 WIRE — LOCATION: SENIOR BLDG (KITCHEN) — FEEDER — MAIN BKR: M.L.O. — ENTER CAB'T. AT: BOTTOM — BRACE: 22,000 AIC — 225A BUSSING — FLUSH MTG.

REMARKS	BKR. TYPE	LOCATION	VOLT AMPS ϕA	ϕB	ϕC	LTG or LCL	REC	MIS	CIR	BKR	BKR	CIR	MIS	REC	LTG or LCL	VOLT AMPS ϕA	ϕB	ϕC	LOCATION	BKR. TYPE	REMARKS
–	–	SPACE	–			–	–	–	1	–	20/1	2	–	–	–	0			SPARE	–	–
–	–	SPACE		–		–	–	–	3	–	20/1	4	–	–	–		0		SPARE	–	–
–	–	SPACE			–	–	–	–	5	–	20/1	6	–	–	–			0	SPARE	–	–
–	–	SPACE	–			–	–	–	7	–	–	8	–	–	–	–			SPACE	–	–
–	–	SPACE		–		–	–	–	9	–	–	10	–	–	–		–		SPACE	–	–
–	–	SPACE			–	–	–	–	11	–	–	12	–	–	–			–	SPACE	–	–
–	–	SPACE	–			–	–	–	13	–	–	14	–	–	–	–			SPACE	–	–
–	–	SPACE		–		–	–	–	15	–	–	16	–	–	–		–		SPACE	–	–
–	–	SPACE			–	–	–	–	17	–	–	18	–	–	–			–	SPACE	–	–
–	–	SPACE	–			–	–	–	19	–	–	20	–	–	–	–			SPACE	–	–
–	–	SPACE		–		–	–	–	21	–	–	22	–	–	–		–		SPACE	–	–
–	–	SPACE			–	–	–	–	23	–	–	24	–	–	–			–	SPACE	–	–
–	–	SPACE	–			–	–	–	25	–	–	26	–	–	–	–			SPACE	–	–
–	–	SPACE		–		–	–	–	27	–	–	28	–	–	–		–		SPACE	–	–
–	–	SPACE			–	–	–	–	29	–	–	30	–	–	–			–	SPACE	–	–
–	–	SPACE	–			–	–	–	31	–	–	32	–	–	–	–			SPACE	–	–
–	–	SPACE		–		–	–	–	33	–	–	34	–	–	–		–		SPACE	–	–
–	–	SPACE			–	–	–	–	35	–	–	36	–	–	–			–	SPACE	–	–
–	–	SPACE	–			–	–	–	37	–	–	38	–	–	–	–			SPACE	–	–
–	–	SPACE		–		–	–	–	39	–	–	40	–	–	–		–		SPACE	–	–
–	–	SPACE			–	–	–	–	41	–	–	42	–	–	–			–	SPACE	–	–
–	–																			–	–

ϕA: 0 VA ϕB: 0 VA ϕC: 0 VA

TOTAL CONNECTED LOAD: 0 VA OR 0.0 AMPS @ 208 VOLTS – 3 ø

LCL: 0 VA x 125% = 0 VA

FDL: 0 VA OR 0.0 AMPS

HACR = HACR TYPE CIRCUIT BREAKER L/O = PROVIDE LOCK-OFF DEVICE ON CIRCUIT BREAKER AFCI = ARC FAULT INTERRUPTING TYPE CIRCUIT BREAKER

GFCI = GROUND FAULT INTERRUPTING TYPE CIRCUIT BREAKER

(1) **ALL PANEL BOARD BRANCH CIRCUIT BREAKERS THE FOLLOWING SHALL APPLY:** ON ALL MULTI-WIRED HOMERUN CIRCUIT BREAKERS (REFER TO PLANS TO DETERMINE 2 AND/OR 3 HOMERUNS), CONTRACTOR SHALL FIELD INSTALL ON ALL MULTI-USE CIRCUIT BREAKERS APPROVED HANDLE TIE (PER CEC 210.4(B))

REFERENCE NOTES

(1) –

PARTIAL ENLARGED KITCHEN ELECTRICAL FLOOR PLAN

COPYRIGHT ©2024 BREEN DESIGN GROUP

Y&M Architects
255 South Santa Fe Avenue, Suite 103
Los Angeles, CA 90012
Telephone: 213 623 2107
www.ymarch.com

DRAWN BY	JM, FT
DESIGNED BY	CVK, FT, JM
CHECKED BY	CVK, FT, AA
APPROVED BY	DM

BREEN DESIGN GROUP
3825 DEL AMO BOULEVARD
TORRANCE, CA 90503
PH: 310 464 8404
WWW.BREENDESIGN.COM

REGISTERED PROFESSIONAL ENGINEER — DESMOND MAKNOYAN — NO. E20642 — EXP. 03-31-26 — ELECTRICAL — STATE OF CALIFORNIA

FRESNO SENIOR CENTER

Integrated Community Development

Project. *	Developer. 20750 Ventura Boulevard, Suite 155 Woodland Hills, CA 91364	Project No.: 138-24-001	Scale: ############	Date 06.11.24	Page E-4.1

DATE PLOTTED: 3/24/2024 10:27 AM
ORIGINAL SIZE: ARCH FULL BLEED E1 (36.00 X 42.00 INCHES)
BY: FITA TUTOE
PLOT SCALE: 1:1
LAST SAVED: CVK
PLOT STYLE: BREEN DESIGN GROUP.STB
FILE NAME: H:\PROJECTS\138 CORP FOR BETTER HOUSING\24-001 - FRESNO SENIOR CENTER\01 - CAD\SENIOR CENTER PACKAGE\ELECTRICAL\E-4.1 PARTIAL ENLARGED KITCHEN ELECTRICAL FLOOR PLAN.DWG

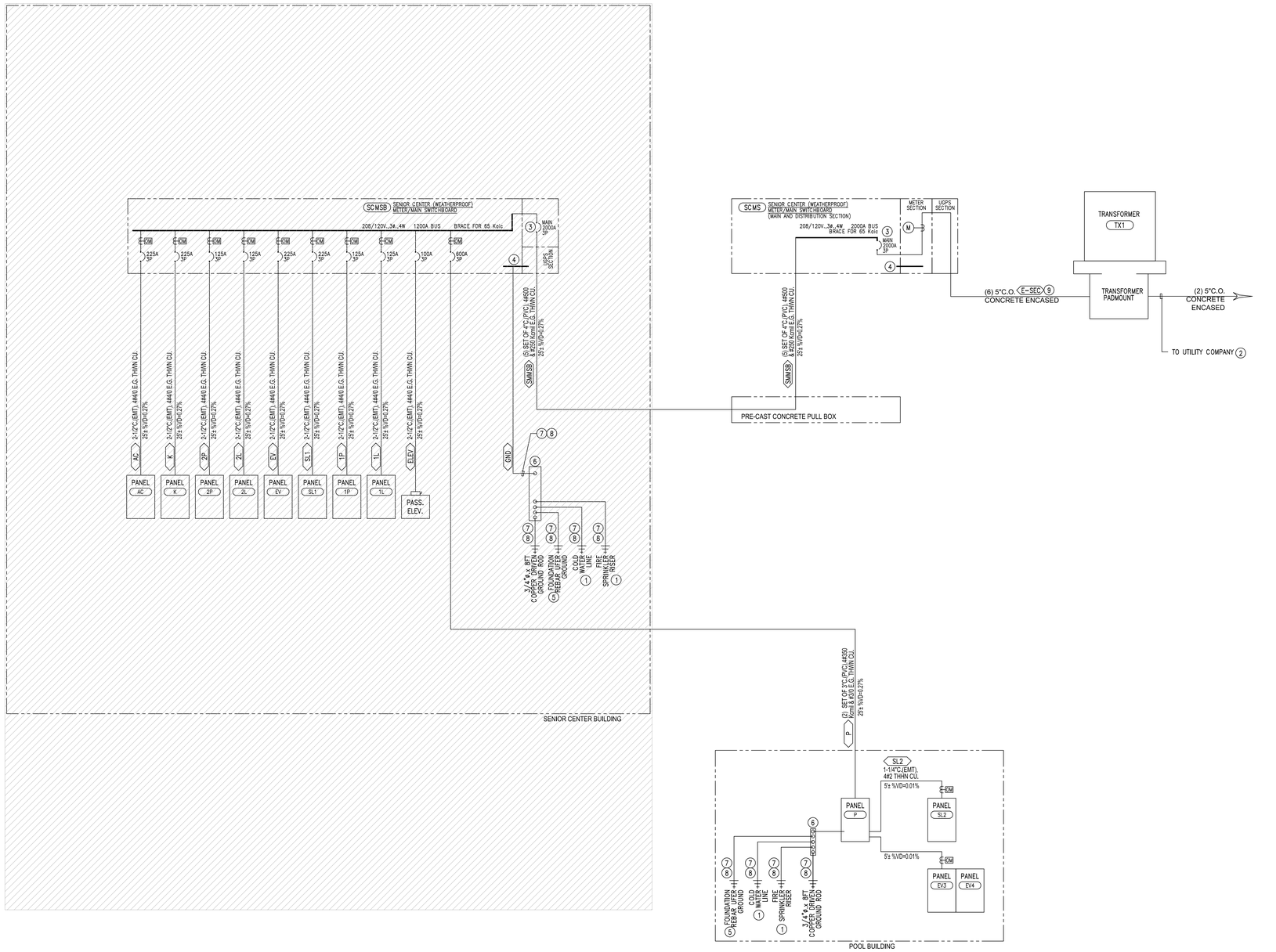

SENIOR CENTER "SMMSB" LOAD CALCULATION

COMMON AREA LIGHTING LOAD (LIGHTING DENSITY VALUES PER CENC TABLE 140.6-C)				
ELEC / MECH / LV ROOM	X 0.40 VA/SF X	165 SF	=	66 VA
CONF/MULTIPURPOSE/MEETING ROOM	X 0.75 VA/SF X	6,481 SF	=	4,861 VA
OFFICE < 250 SF	X 0.65 VA/SF X	432 SF	=	281 VA
LANDSCAPED / DECK	X 0.40 VA/SF X	4,485 SF	=	1,794 VA
LOBBY/LOUNGE	X 0.70 VA/SF X	8,200 SF	=	5,740 VA
LIBRARY	X 0.50 VA/SF X	2,500 SF	=	1,250 VA
DINING AREA(CAFETERIA)	X 0.45 VA/SF X	2,250 SF	=	1,013 VA
FITNESS/EXERCISE	X 0.50 VA/SF X	2,600 SF	=	1,300 VA
KITCHEN/FOOD PREPARATION	X 0.95 VA/SF X	700 SF	=	665 VA
CORRIDOR AREA	X 0.40 VA/SF X	1,210 SF	=	484 VA
STORAGE/UTILITY	X 0.40 VA/SF X	800 SF	=	320 VA
STAIR	X 0.60 VA/SF X	514 SF	=	308 VA
RESTROOM	X 0.65 VA/SF X	1,921 SF	=	1,249 VA
BREAKROOM	X 0.55 VA/SF X	222 SF	=	122 VA
COMMON AREA POWER LOAD	X 3.00 VA/SF X	32,480 SF	=	97,440 VA
KITCHEN PANEL	75,000 VA X	1 LUMP SUM	=	75,000 VA
KITCHEN PANEL AC (HOODS)	35,000 VA X	1 LUMP SUM	=	35,000 VA
PLUMBING EQUIPMENT	80 A X	208 V x 1.732	=	28,820 VA
MECHANICAL EQUIPMENT	80 A X	208 V x 1.732	=	28,820 VA
EV CHARGER UNITS W/ LCL	8,320 X	14 UNITS	=	116,480 VA
(1) ELEVATOR LOAD @ 15HP	1 X 46 AMPS X	208 V x 1.732	=	16,572 VA
25% LARGEST MOTOR	X 16,572 VA X	0.25	=	4,143 VA
		TOTAL LOAD	=	421,728 VA
		TOTAL ESTIMATED LOAD AMPS	=	1,171 AMPS
		RECOMMENDED SERVICE @ 120/208V, 3ϕ, 4W	=	1,600 AMPS

TOTAL "SCMS" ELECTRICAL SERVICE LOAD CALCULATION

SENIOR CENTER BUILDING LOAD "SMSB" (WHICH INCLUDE THE CONNECTION OF 14 EV CAR CHARGERS)	=	421,727.9 KVA
POOL BUILDING LOAD "P" (WHICH INCLUDE PANEL "SL2", "EV3", "EV4" AND THE CONNECTION OF 14 EV CAR CHARGERS).	=	166,598 VA
NOT USED	=	0
TOTAL ELECTRICAL LOAD	=	588,326 VA
TOTAL HOUSE LOAD AMPS	=	1,633 AMPS
RECOMMENDED SERVICE @ 120/208V, 3ϕ, 4W	=	2,000 AMPS

GENERAL NOTES

1. ALL SWITCHBOARDS AND PANELS FEEDERS CONDUIT SIZES AND 75° CONDUCTOR AMPACITY ARE BASED ON COPPER, UNLESS OTHERWISE NOTED ALUMINUM.
2. ALL MOTOR FEEDERS CONDUIT SIZES AND CONDUCTOR AMPACITY ARE BASED ON "THHN OR THWN" TYPE CU.
3. THE MINIMUM INTERRUPTING RATING OF 120/208V CIRCUIT BREAKERS SHALL BE 22,000 AIC. THE AVAILABLE FAULT CURRENT AT ALL UNIT PANELBOARDS MAY BE LESS THAN THIS VALUE FOR THE VOLTAGE UNLESS INDICATED OTHERWISE. WHERE HIGHER FAULT CURRENT VALUES ARE AVAILABLE, THE RATINGS OF THESE DEVICES INTENDED TO INTERRUPT THE CURRENT AND THEIR BOARDS SHALL BE INCREASED ACCORDINGLY.
   A. MAIN SWITCHGEAR CIRCUIT BREAKERS TO BE FULLY RATED FOR THE FAULT CURRENT AVAILABLE. ALL OTHER DOWNSTREAM DEVICES TO BE SERIES RATED PER SIEMENS MANUFACTURERS RECOMMENDATIONS.
4. 75°C RATING TERMINAL LUGS AT PANELBOARDS SHALL MATCH THE INSULATION RATING OF THE CONDUCTORS OF 75°C RATING.
5. THE MAXIMUM VOLTAGE DROP FOR THE ELECTRICAL DISTRIBUTION SYSTEM SHALL NOT EXCEED 5% AND SHALL COMPLY WITH 2022 CEC AND LOCAL BUILDING CODE.
   A. SWITCHGEA, DISTRIBUTION BOARDS, AND PANELS VOLTAGE DROP PERCENTAGES SHOWN AT THE SINGLE LINE DIAGRAM ELECTRICAL FEEDER ARE BASED ON 2% AND BRANCH CIRCUITRY VOLT DROP SHALL NOT EXCEED 3% TO THE FURTHEST OUTLET, FOR A TOTAL OF 5% MAX.
6. ALL SWITCHGEAR, DISTRIBUTION BOARDS, AND PANEL BOARDS ARE BASED ON SIEMENS MANUFACTURER FOR SPACE CONSTRAINT REASON. DISTRIBUTION BOARDS BY OTHER MANUFACTURERS SHALL HAVE THE SAME OR SMALLER PHYSICAL DIMENSIONS. ALL DISTRIBUTION BOARDS, APARTMENT PANELBOARDS AND COMPONENTS SHALL BE 100% AND FULLY RATED FOR THE AVAILABLE AIC INTERRUPTING RATING UNLESS OTHERWISE NOTED.
7. WHERE CONDUIT INSTALLATIONS RUN THROUGH FIRE RATED FLOOR OR WALL ASSEMBLIES, THE CONTRACTOR SHALL PATCH BUILDING STRUCTURE AND PROVIDE "3M" FIRE SEAL COMPOUND AT LOCATIONS WHERE CONDUITS PENETRATE THROUGH WALLS AND FLOORS.
8. WHERE NO EQUIPMENT GROUND IS SPECIFIED, PROVIDE PATH FOR CONTINUOUS EQUIPMENT GROUND BY BONDING AND GROUNDING ALL NON CURRENT CARRYING METAL CONDUIT, EQUIPMENT ENCLOSURES, SUPPORTS AND FRAMES.
9. NO PIPING, DUCTS OR EQUIPMENT FOREIGN TO ELECTRICAL EQUIPMENT SHALL BE PERMITTED TO BE LOCATED WITHIN THE DEDICATED SPACE ABOVE ELECTRICAL EQUIPMENT.
10. EACH SERVICE DISCONNECT SHALL BE PERMANENTLY MARKED TO IDENTIFY IT AS A SERVICE DISCONNECT.
11. APPLIANCES PROVIDED AND INSTALLED MEETS ENERGY STAR IF AN ENERGY STAR DESIGNATION IS APPLICABLE FOR THAT APPLIANCE AND IS SUBJECT TO FIELD VERIFICATION.
12. EACH DISCONNECTING MEANS SHALL BE LEGIBLY MARKED TO INDICATE ITS PURPOSE UNLESS LOCATED AND ARRANGED SO THE PURPOSE IS EVIDENT. THE MARKINGS SHALL BE OF SUFFICIENT DURABILITY TO WITHSTAND THE ENVIRONMENTAL INVOLVED. 2019 CEC 110.22(A).
13. ALL TERMINALS TO BE DUAL RATED FOR COPPER AND ALUMINUM.
14. FOR MOTOR RATED FUSED DISCONNECT EJECTION TYPE FUSES AND FUSE HOLDER SHALL BE PROVIDED IN THIS CONTRACT.
15. FEEDER LENGTH SHOWN FOR VOLTAGE DROP CALCULATION ONLY. CONTRACTOR SHALL VERIFY ACTUAL LENGTH OF RUN IN THIS BID AND VERIFY ANY DISCREPANCIES WITH THE ENGINEER PRIOR TO AWARD OF CONTROL.
16. ELECTRICAL EQUIPMENT SHALL BE LISTED BY A RECOGNIZED ELECTRICAL TESTING LABORATORY OR APPROVED BY THE DEPARTMENT OF BUILDING AND SAFETY.
17. ALL GROUNDING ELECTRODES THAT ARE OR CONNECTED BY PERMANENT WRITING METHOD SHALL BE GROUNDED.
18. ELECTRICAL EQUIPMENT, SUCH AS SWITCHBOARDS, PANELBOARDS, INDUSTRIAL CONTROL PANELS, METER SOCKET ENCLOSURES, AND MOTOR CONTROL CENTERS, THAT ARE IN OTHER THAN DWELLING UNITS, AND ARE LIKELY TO REQUIRE EXAMINATION, ADJUSTMENT, SERVICING, OR MAINTENANCE WHILE ENERGIZED SHALL BE FIELD MARKED TO WARN QUALIFIED PERSONS OF POTENTIAL ELECTRIC ARC FLASH HAZARDS. THE MARKING SHALL BE LOCATED SO AS TO BE CLEARLY VISIBLE TO QUALIFIED PERSONS BEFORE EXAMINATION, ADJUSTMENT, SERVICING, OR MAINTENANCE OF THE EQUIPMENT.
19. UTILITY SIDE TAP CONNECTIONS SHALL BE SUBJECT TO APPROVAL AND INSPECTION BY THE UTILITY PROVIDER PRIOR TO NEXT PLAN SUBMITTAL.

REFERENCE NOTES

1. PROVIDE 3/4"C.,1#3/0 CU. GROUND AND CONNECT TO NEAREST COLD WATER LINE AND 2/0 BARE CU. 20FT IN LENGTH UPPER GROUND. CONNECTION TO THE COLD WATER LINE SHALL BE MADE TO THE INTERIOR IF APPLICABLE AND/OR WITHIN 5 FEET OF WHERE THE MAIN WATER PIPE ENTERS THE BUILDING. (PER NEC ARTICLE 250-50).
2. TO POWER COMPANY TRANSFORMER SERVICE POINT OF CONNECTION – SEE SITE ELECTRICAL PLAN FOR ADDITIONAL INFORMATION AND REQUIREMENTS.
3. MAIN FUSE SWITCH SHALL BE FULLY RATED FOR CONTINUOUS DUTY LOAD AND U.L. LISTED FOR SERVICE DISCONNECT. PROVIDE FUSE REDUCERS AND IDENTIFY SWITCH MAXIMUM FUSE OF 175A. AS SHOWN.
4. DISTRIBUTION BOARD GROUND TO BE BONDED TO BUILDING MAIN GROUNDING SYSTEM (GROUND BUS BAR).
5. 1"C.1#3/0 CU. GROUND BOND TO BUILDING STEEL AND CONCRETE FOUNDATION FOOTING REBAR.
6. MAIN GROUNDING BUS ASSEMBLY, TO BE LOCATED WITHIN MAIN ELECTRICAL ROOM.
7. 1"C-1#3/0 THHN CU. (GROUND)
8. 3/4"C.,1#1 BONDED BACK TO GROUND BUS BAR
9. SERVICE ENTRANCE FEEDER TO PROVIDE AND SIZE BY A LOCAL UTILITY COMPANY.
10. VNEM CABINET IS LOCATED ABOVE THE 400A PV AC DISCONNECT.
11. FROM GENERATOR SET CONNECT 1"C., 3/0 THHN AL. (GROUND) TO BUILDING GROUNDING SYSTEM BUS BAR.

ELECTRICAL SINGLE LINE DIAGRAM

DATE PLOTTED: 5/17/2022 4:43 PM
ORIGINAL SIZE: ARCH FULL BLEED E1 (30.00 X 42.00 INCHES)
BY: FITA TUTOE
PLOT SCALE: 1:1
LAST SAVED: CVK
PLOT STYLE: BREEN DESIGN GROUP.STB
FILE NAME: H:\PROJECTS\138 CORP FOR BETTER HOUSING\24-001 - FRESNO SENIOR CENTER\01 - CAD\SENIOR CENTER PACKAGE\ELECTRICAL\E-5.1 ELECTRICAL SINGLE LINE DIAGRAM.DWG

Y&M Architects
255 South Santa Fe Avenue, Suite 103
Los Angeles, CA 90012
Telephone: 213 623 2107
www.ymarch.com

DRAWN BY	JM, FT
DESIGNED BY	CVK, FT, JM
CHECKED BY	CVK, FT, AA
APPROVED BY	DM

BREEN DESIGN GROUP
3825 DEL AMO BOULEVARD
TORRANCE, CA 90503
PH: 310 464 8404
WWW.BREENDESIGN.COM

REGISTERED PROFESSIONAL ENGINEER DIEMOND MAHONEY NO. E20642 EXP. 03-31-26 ELECTRICAL STATE OF CALIFORNIA

FRESNO SENIOR CENTER

Integrated Community Development

Project. *	Developer. 20750 Ventura Boulevard, Suite 155 Woodland Hills, CA 91364	Project No.: 138-24-001	Scale: N.T.S.	Date 06.11.24	Page E-5.1

COPYRIGHT ©2024 BREEN DESIGN GROUP

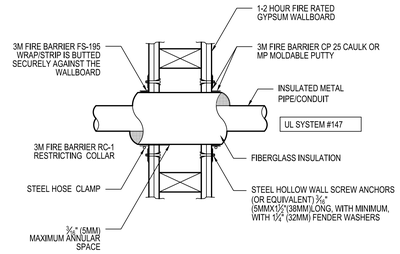

FIRE STOP METAL CONDUIT THRU GYPSUM WALL (13)

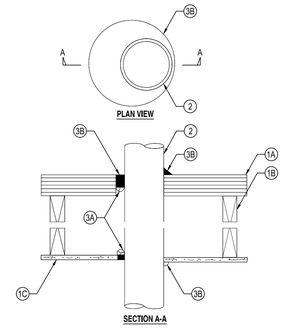

REFERENCE NOTES

1. FLOOR/CEILING ASSEMBLY: A. FLOORING SYSTEM: ⅜" THICK PLYWOOD/2"x4" CONTINUOUS WOOD DECKING. B. WOOD JOIST: NOM. 2"x10" LUMBER JOIST. C. CEILING SYSTEM: 1 LAYER OF 5/8" GYPSUM WALLBOARD, PER UL DESIGN.
2. METALLIC PIPE: A. STEEL PIPE: 8" DIAMETER (OR SMALLER) SCHEDULE 40 (OR HEAVIER) STEEL PIPE. B. IRON PIPE: 8" DIAMETER (OR SMALLER) CAST OR DUCTILE IRON PIPE. C. CONDUIT: 4" DIAMETER (OR SMALLER) ELECTRICAL METALLIC TUBING EMT OR STEEL CONDUIT. D. COPPER TUBING: 4" DIAMETER (OR SMALLER) TYPE L (OR HEAVIER) COPPER TUBING. E. COPPER PIPE: 4" DIAMETER (OR SMALLER) REGULAR (OR HEAVIER) COPPER PIPE. ANNULAR SPACE FROM MINIMUM 0" TO MAXIMUM ½".
3. FORMING AND FIRE STOP MATERIALS: A. FORMING MATERIAL (OPTIONAL): FOAM BACKER ROD PACKED INTO OPENING AS PERMANENT FORM. B. TYPE IA: MINIMUM ½" THICK SEALANT APPLIED WITHIN THE ANNULUS, FLUSH WITH THE TOP OF THE FLOOR AND BOTTOM OF THE CEILING ASSEMBLIES. ADDITIONAL SEALANT TO BE APPLIED SUCH THAT A MINIMUM ½" CROWN IS FORMED AROUND THE PENETRATING ITEM.

CEILING/FLOOR PENETRATION (9)

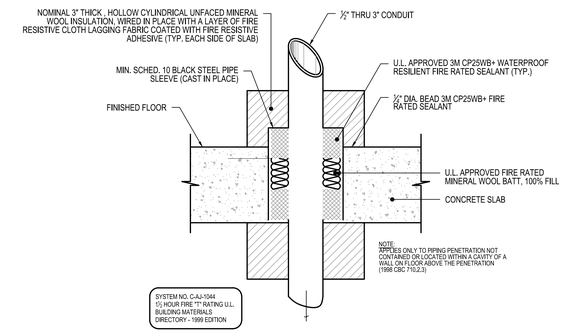

CONDUIT PNTRTNG. FIRE RATED FLR/CEILING & ROOF/CEILING ASSEMBLY (5)

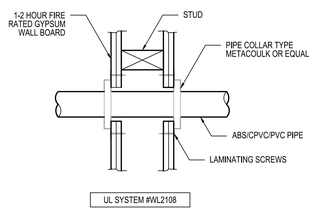

FIRE STOP - PLASTIC CONDUIT THRU GYPSUM WALL (12)

REFERENCE NOTES

1. WALL CONSTRUCTION STEEL STUDS PER ARCHITECTURAL/STRUCTURAL.
2. WALL CONSTRUCTION ⅝" TYPE X GYPSUM BOARD PER ARCHITECTURAL.
3. CONDUIT SIZE PER DRAWINGS.
4. FIRE STOP SYSTEM - ONE HOUR CAULK APPLY TO INTERFACE WITH WALL SURFACE.

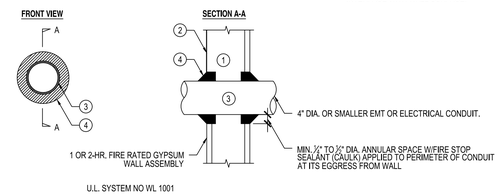

NOTE: MAX. DIA OF OPENING IS 13½" ANNULAR SPACE OF MIN ½" DIA. BEAD IS REQUIRED.

CONDUIT PENETRATION THRU 1-HOUR FIRE/SMOKE WALL DETAIL (8)

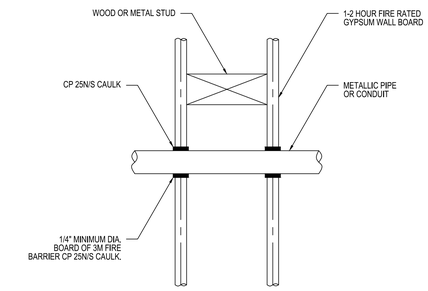

CONDUIT PENETRATING FIRE RATED GYPSUM WALLBOARD (4)

GENERAL NOTES

1. SEE SPECIFICATIONS FOR ADDITIONAL INFORMATION.

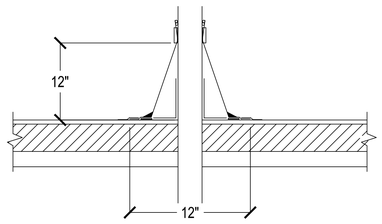

PIPE THRU ROOF DETAIL (11)

GENERAL NOTES

1. ELECTRICAL EQUIPMENT, SUCH AS SWITCHBOARDS, PANELBOARDS, INDUSTRIAL CONTROL PANELS, METER SOCKET ENCLOSURES, AND MOTOR CONTROL CENTERS, THAT ARE IN OTHER THAN DWELLING UNITS, AND ARE LIKELY TO REQUIRE EXAMINATION, ADJUSTMENT, SERVICING, OR MAINTENANCE WHILE ENERGIZED SHALL BE FIELD MARKED TO WARN QUALIFIED PERSONS OF POTENTIAL ELECTRIC ARC FLASH HAZARDS. THE MARKING SHALL BE LOCATED SO AS TO BE CLEARLY VISIBLE TO QUALIFIED PERSONS BEFORE EXAMINATION, ADJUSTMENT, SERVICING, OR MAINTENANCE OF THE EQUIPMENT.
2. INFORMATIONAL NOTE NO. 1: NFPA 70E-2009, STANDARD FOR ELECTRICAL SAFETY IN THE WORKPLACE, PROVIDES ASSISTANCE IN DETERMINING SEVERITY OF POTENTIAL EXPOSURE, PLANNING SAFE WORK PRACTICES, AND SELECTING PERSONAL PROTECTIVE EQUIPMENT. INFORMATIONAL NOTE NO. 2: ANSI Z535.4-1998, PRODUCT SAFETY SIGNS AND LABELS, PROVIDES GUIDELINES FOR THE DESIGN OF SAFETY SIGNS AND LABELS FOR APPLICATION TO PRODUCTS.

EXAMPLE OF ARC FLASH WARNING SIGN

ARC FLASH WARNING SIGN (7)

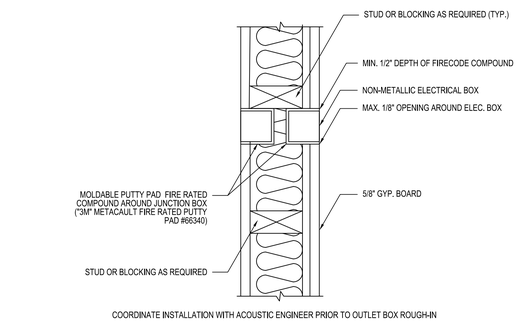

BACK TO BACK NON - METALLIC ELECTRICAL BOX CONFIGURATION

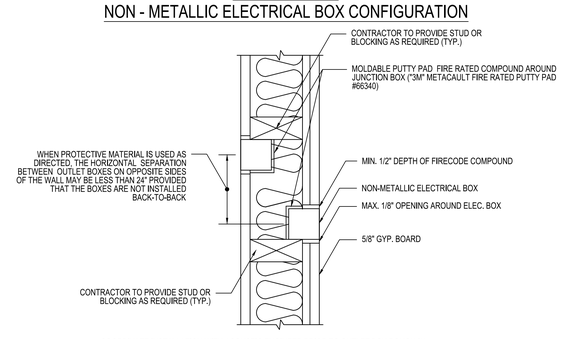

NON - METALLIC ELECTRICAL BOX CONFIGURATION

(NOTE: CONTRACTOR IS URGED TO AVOID THIS INSTALLATION WHERE EVER POSSIBLE)

TYP. ELECTR. BOX INST. DET. AT FIRE RATED SEPARATION WALLS (3)

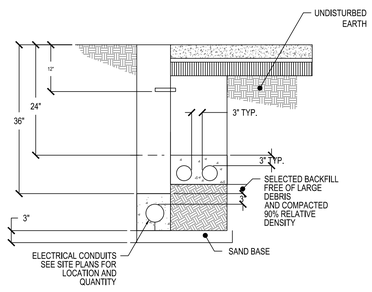

TYPICAL TRENCH DETAIL (10)

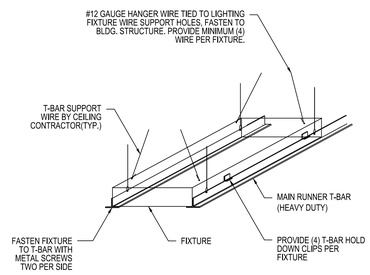

RECESSED FIXTURE SEISMIC MOUNTING (6)

ELECTRICAL DETAILS - SHEET ONE

Y&M Architects
Y&M Architects
255 South Santa Fe Avenue, Suite 103
Los Angeles, CA 90012
Telephone: 213 623 2107
www.ymarch.com

DRAWN BY	JM, FT
DESIGNED BY	CVK, FT, JM
CHECKED BY	CVK, FT, AA
APPROVED BY	DM

BREEN DESIGN GROUP
3825 DEL AMO BOULEVARD
TORRANCE, CA 90503
PH: 310 464 8404
WWW.BREENDESIGN.COM
REGISTERED PROFESSIONAL ENGINEER DIEMOND MATHAY NO. E20642 EXP. 03-31-26 ELECTRICAL STATE OF CALIFORNIA

FRESNO SENIOR CENTER

Integrated Community Development

Project. *	Developer. 20750 Ventura Boulevard, Suite 155 Woodland Hills, CA 91364	Project No.: 138-24-001	Scale:	Date	Page
				06.11.24	E-6.1

COPYRIGHT ©2024 BREEN DESIGN GROUP

DATE PLOTTED: 5/17/2022 4:43 PM
ORIGINAL SIZE: ARCH FULL BLEED E1 (30.00 X 42.00 INCHES)
BY: FITA TUTOE
PLOT SCALE: 1:1
LAST SAVED: AAPOVCN
PLOT STYLE: BREEN DESIGN GROUP-STB
FILE NAME: H:\PROJECTS\138 CORP FOR BETTER HOUSING\24-001 - FRESNO SENIOR CENTER\01 - CAD\SENIOR CENTER PACKAGE\ELECTRICAL\E-6.1 ELECTRICAL DETAILS - SHEET ONE.DWG

GENERAL NOTES

1. DETAIL IS FOR BIDDING AND INFORMATION ONLY, CONTRACTOR SHALL REFER TO STRUCTURAL AND CIVIL DRAWINGS FOR EXACT LOCATION AND INFORMATION ON THE CONSTRUCTION OF FOUNDATION.

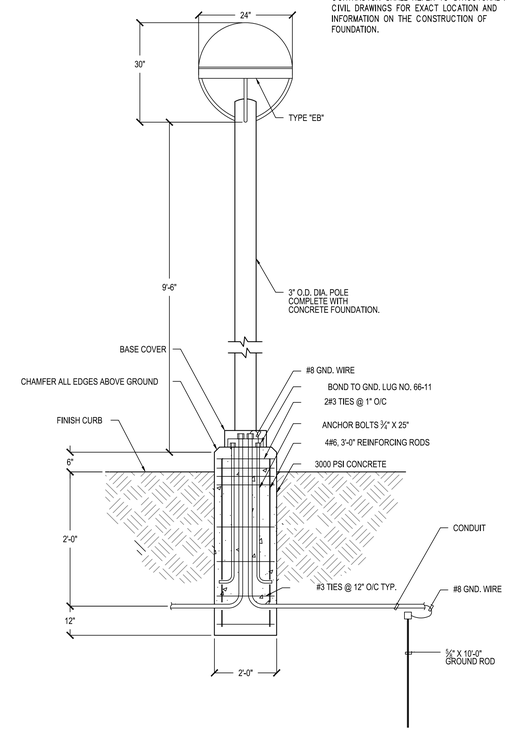

WALKWAY LIGHT POLE STANDARD FOUNDATION DETAIL (5)

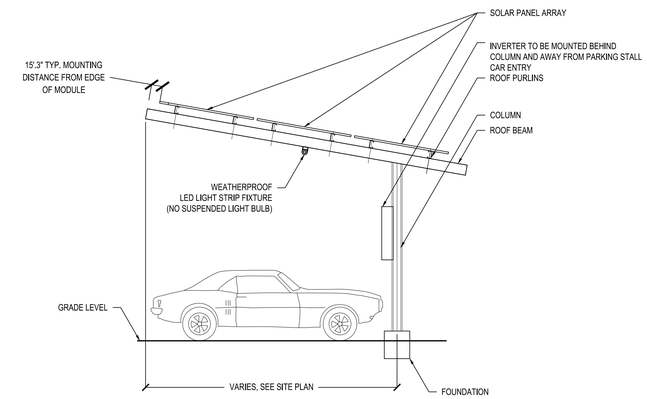

CARPORT LIGHTING DETAIL (3)

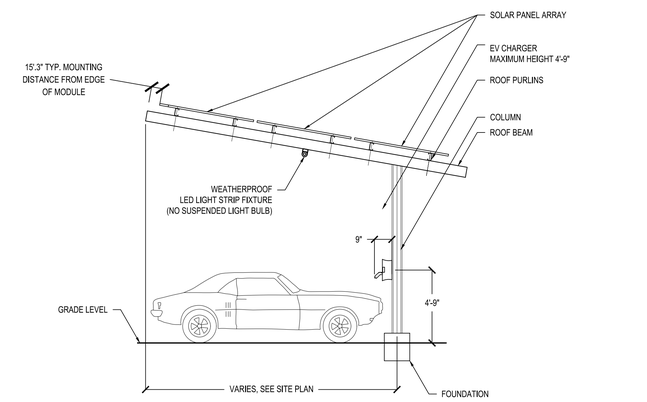

EV CHARGER ELEVATION DETAILS (2)

GENERAL NOTES

1. DETAIL IS FOR BIDDING AND INFORMATION ONLY, CONTRACTOR SHALL REFER TO STRUCTURAL AND CIVIL DRAWINGS FOR EXACT LOCATION AND INFORMATION ON THE CONSTRUCTION OF FOUNDATION.

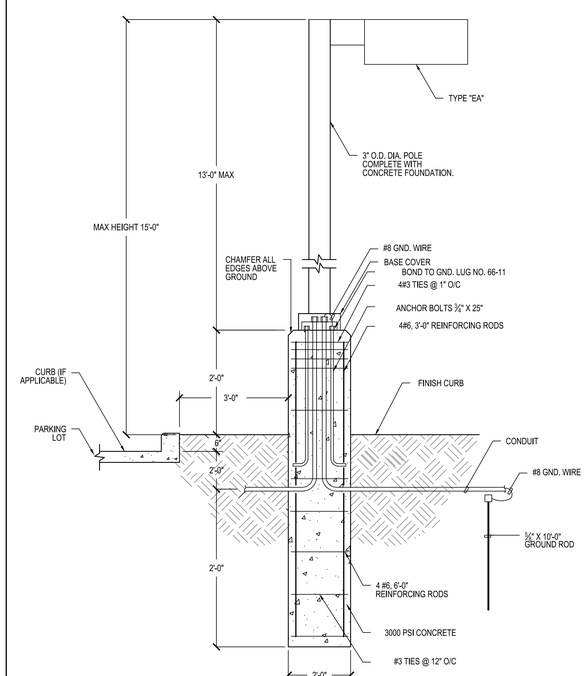

PARKING LOT LIGHT POLE STANDARD FOUNDATION DETAIL (6)

GENERAL NOTES

1. DETAIL IS FOR BIDDING AND INFORMATION ONLY, CONTRACTOR SHALL REFER TO STRUCTURAL AND CIVIL DRAWINGS FOR EXACT LOCATION AND INFORMATION ON THE CONSTRUCTION OF FOUNDATION.

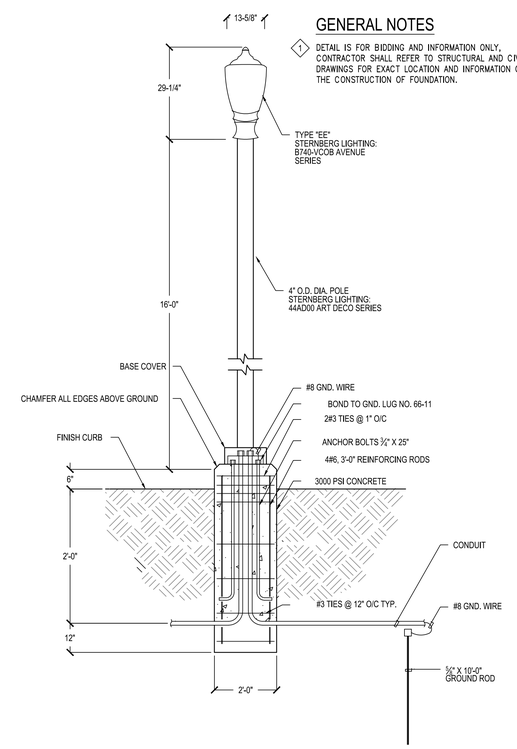

STREET LIGHT POLE STANDARD FOUNDATION DETAIL (4)

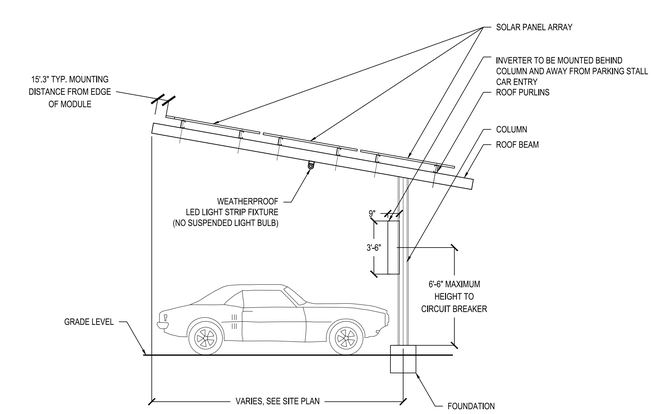

CAR PARKING SINGLE CANTILEVER ROOF CANOPY (1)

ELECTRICAL DETAILS - SHEET TWO

FILE NAME: H:\PROJECTS\138 CORP FOR BETTER HOUSING\24-001 - FRESNO SENIOR CENTER\01 - CAD\SENIOR CENTER PACKAGE\ELECTRICAL\E-6.2 ELECTRICAL DETAILS - SHEET TWO.DWG

LAST SAVED: A.APOYON
PLOT STYLE: BREEN DESIGN GROUP STB

BY: FITA TUTOE
PLOT SCALE: 1:1

DATE PLOTTED: 5/17/2022 4:43 PM
ORIGINAL SIZE: ARCH FULL BLEED E1 (930.00 X 42.00 INCHES)

Y&M Architects
Y&M Architects
255 South Santa Fe Avenue, Suite 103
Los Angeles, CA 90012
Telephone: 213 623 2107
www.ymarch.com

DRAWN BY	JM, FT
DESIGNED BY	CVK, FT, JM
CHECKED BY	CVK, FT, AA
APPROVED BY	DM

BREEN DESIGN GROUP
3825 DEL AMO BOULEVARD
TORRANCE, CA 90503
PH: 310 464 8404
WWW.BREENDESIGN.COM

REGISTERED PROFESSIONAL ENGINEER DESMOND MAHONY NO. E20642 EXP. 03-31-26 ELECTRICAL STATE OF CALIFORNIA

FRESNO SENIOR CENTER

Integrated Community Development

Project. *	Developer. 20750 Ventura Boulevard, Suite 155 Woodland Hills, CA 91364	Project No.: 138-24-001	Scale:	Date	Page
				06.11.24	E-6.2

COPYRIGHT ©2024 BREEN DESIGN GROUP

CABLE INSTALLATION CONSTRUCTION NOTES:

1. PROVIDE CAT. 6A DATA CABLE BLUE JACKET (WITH 30 FT OF SLACK CABLE COIL-UP ABOVE THE CEILING) – FROM EACH DATA JACK AND HOMERUN BACK TO IDF OR MDF AS REQUIRED, REFER TO PLANS FOR EXACT QUANTITY OF CABLES REQUIRED AT EACH DATA OUTLET LOCATIONS.

2. PROVIDE CAT. 6a TELEPHONE CABLE WHITE JACKET (WITH 30 FT OF SLACK CABLE COIL-UP ABOVE THE CEILING) – FROM PHONE JACK AND HOMERUN BACK TO EXISTING PHONE EQUIPMENT BACKBOARD LOCATED IN MDF ROOM IN ADMINISTRATION OFFICE.

3. TESTING, LABELING AND CABLE CERTIFICATION:

   CONTRACTOR SCOPE OF WORK SHALL INCLUDE ALL LABOR, TOOLS AND TESTING EQUIPMENT REQUIRED FOR TESTING, AND CERTIFICATION OF ALL NEW OR EXISTING THERMOSTAT, DATA, TELEPHONE AND INTERCOM SYSTEM CLOCK/SPEAKER (SEE ITEM 1, 2 ABOVE) CABLING BEING RE-INSTALLED OR PROVIDED NEW IN THIS CONTRACT. WORK SHALL INCLUDE, BUT NOT BE LIMITED TO:

   A. TESTING OF NEW AND EXISTING CABLING FOR SHORT AND CABLE CONTINUITY TO ALL AREAS AFFECTED BY THIS CONTRACT (I.E. CLASSROOMS, COMPUTER ROOMS, OFFICES AND ETC. INCLUDING TEMPERATURE SCANNING CAMERAS).

   B. TAG AND LABEL EACH NEW CABLE AS TO IT'S SERVING OUTLET (JACK) LOCATION, ROUTER PORT ID AND IP ADDRESS.

   C. SUBMIT CABLE TESTING AND ID DOCUMENTATION IDENTIFYING THAT ALL CABLES BEING RE-INSTALLED OR INSTALLED NEW ARE PROPERTY IDENTIFIED AND LABEL PER DISTRICT STANDARDS, FREE OF SHORT AND THAT CABLE MEET THE ANSI/TIA/EIA STANDARDS, 568-B, 569-A, 606, 607. FOR CONTINUITY.

   D. AT EACH IDF RACK(S) OR MDF RACK ALL DATA AND PHONE CABLES PROVIDED IN THIS CONTRACT INCLUDING AS A MINIMUM THE CAT.6 PATCH CORDS JUMPERS REQUIRED BETWEEN THE ROUTER SWITCH AND PATCH DISTRIBUTION TERMINAL. PATCH CORD JUMPERS PROVIDED SHALL TO MATCH THE TOTAL AMOUNT OF CAT. 6a CABLE HORIZONTAL CABLE HOMERUNS PROVIDE IN THIS CONTRACT.

   E. AT EACH MDF AND/OR IDF RACK CABINET PROVIDE FIBER-OPTIC PATCH JUMPER (INCLUDING FIBER-OPTIC TERMINAL CONNECTER) FIBER ROUTER SWITCH AND PATCH DISTRIBUTION TERMINAL AS REQUIRED TO PROVIDE SCHOOL CAMPUS A COMPLETE AND OPERABLE NETWORK SYSTEM.

   F. FOR EACH CLASSROOMS CONTRACTOR SHALL PROVIDE SCHOOL DISTRICT CABLE TEST/DATA REPORT AS TO THE FURTHEST LENGTH OF CAT 6 CABLE TESTING AND TRANSFER DATA SPEED FOR THAT CLASSROOM.

4. UPON COMPLETION OF CONTRACT, CONTRACTOR SHALL THOROUGHLY CLEANED ALL NEW AND EXISTING SIGNAL/DATA CABINETS OF DUST AND DEBRIS.

WIRE LEGEND

SYMBOL	DESCRIPTION
CAT6A	CAT6A DATA CABLE
FIBER	FIBER OPTIC CABLE

LOW VOLTAGE SYMBOLS LEGEND

SYMBOL	DESCRIPTION	COUNT
INDOOR	INDOOR WIRELESS ACCESS POINT	19
	WALL MOUNTED SINGLE-PORT DATA OUTLET	62
	WALL MOUNTED 2-PORT DATA OUTLET	16
	TOTAL DROPS	113

LOW VOLTAGE SHEET INDEX

SHEET NO.	SHEET TITLE	CURRENT ISSUE
LV-0.1	LOW VOLTAGE GENERAL NOTES SYMBOLS LEGEND & SHEET INDEX	100% DD
LV-1.0	LOW VOLTAGE SITE PLAN	100% DD
LV-2.1	LOW VOLTAGE DATA & WAPFIRST FLOOR PLAN	100% DD
LV-2.2	LOW VOLTAGE DATA & WAP SECOND FLOOR PLAN	100% DD
LV-2.3	LOW VOLTAGE CCTV & ACCESS CONTROL FIRST FLOOR PLAN	100% DD
LV-2.4	LOW VOLTAGE CCTV & ACCESS CONTROL SECOND FLOOR PLAN	100% DD
LV-4.1	LOW VOLTAGE SINGLE LINE DIAGRAM	100% DD
LV-5.1	LOW VOLTAGE DETAILS	100% DD

LOW VOLTAGE GENERAL NOTES SYMBOLS LEGEND & SHEET INDEX

DATE PLOTTED: 5/17/2022 4:43 PM
ORIGINAL SIZE: ARCH FULL BLEED E1 (30.00 X 42.00 INCHES)
BY: NICHO VILLARUEL
PLOT SCALE: 1:1
LAST SAVED: JP
PLOT STYLE: BREEN DESIGN GROUP.STB
FILE NAME: H:\PROJECTS\138 CORP FOR BETTER HOUSING\24-001 - FRESNO SENIOR CENTER\01 - CAD\SENIOR CENTER PACKAGE\LOW VOLTAGE\LV-0.1 LOW VOLTAGE GENERAL NOTES SYMBOLS LEGEND & SHEET INDEX.DWG

Y&M Architects

Y&M Architects
255 South Santa Fe Avenue, Suite 103
Los Angeles, CA 90012
Telephone: 213 623 2107
www.ymarch.com

DRAWN BY	JA,JP,NV
DESIGNED BY	JB
CHECKED BY	DM
APPROVED BY	-

BREEN DESIGN GROUP
3825 DEL AMO BOULEVARD
TORRANCE, CA 90503
PH: 310 464 8404
WWW.BREENDESIGN.COM

REGISTERED PROFESSIONAL ENGINEER DESMOND MAHONY NO. E20642 EXP. 03-31-26 ELECTRICAL STATE OF CALIFORNIA

COPYRIGHT ©2024 BREEN DESIGN GROUP

FRESNO SENIOR CENTER

Integrated Community Development

Project. *	Developer. 20750 Ventura Boulevard, Suite 155 Woodland Hills, CA 91364	Project No.: 138-24-001	Scale: NONE	Date 06.11.24	Page LV-0.1

GENERAL NOTES

1 -

REFERENCE NOTES

1 -

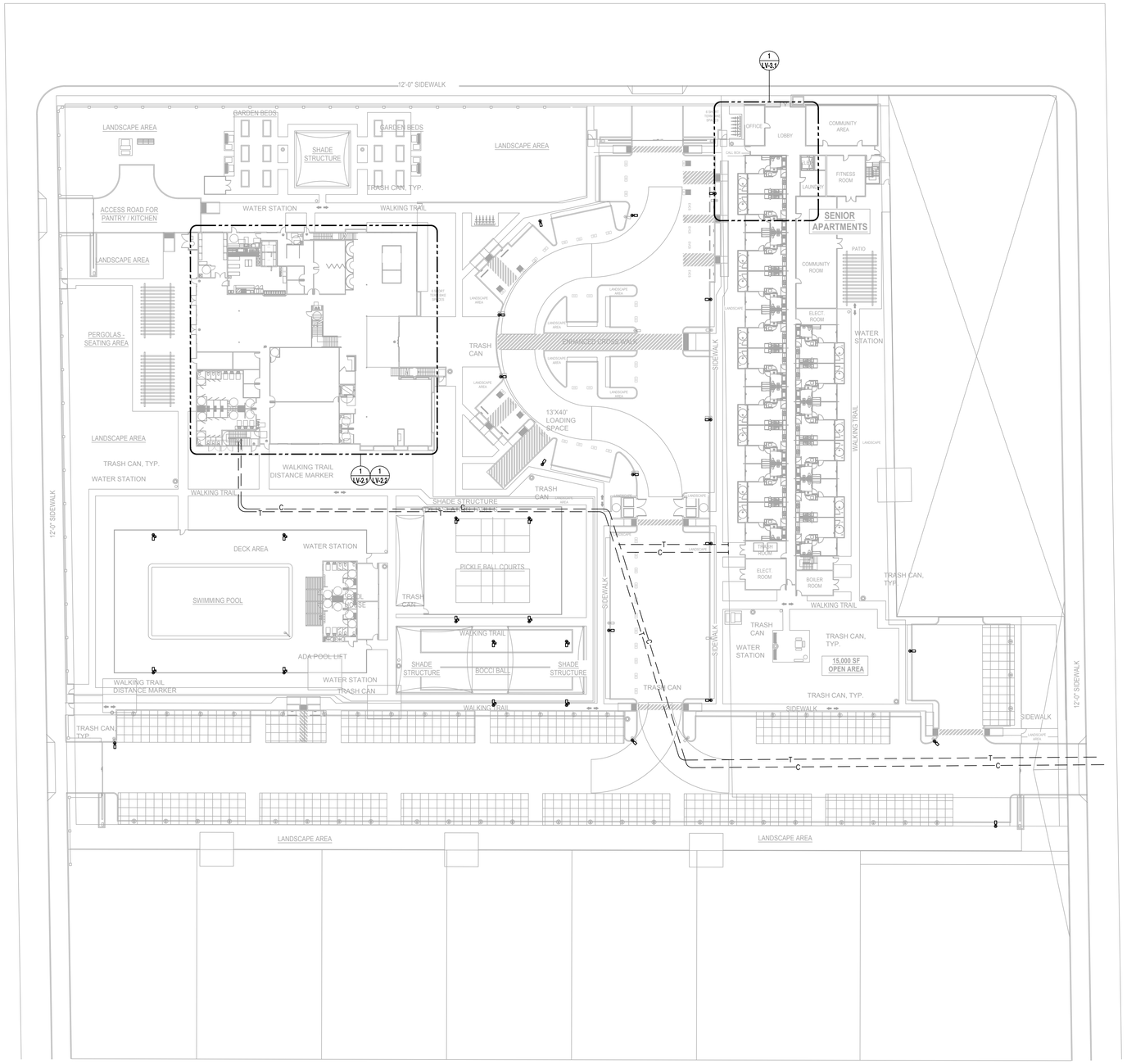

LOW VOLTAGE SITE PLAN

N

FRESNO SENIOR CENTER

Project. *

Developer. 20750 Ventura Boulevard, Suite 155
Woodland Hills, CA 91364

Project No.: 138-24-001

Scale: 1" = 30"

06.11.24
Date

LV-1.0
Page

Integrated Community Development

Y&M Architects

Y&M Architects
255 South Santa Fe Avenue, Suite 103
Los Angeles, CA 90012
Telephone: 213 623 2107
www.ymarch.com

DRAWN BY	JA,JP,NV
DESIGNED BY	JB
CHECKED BY	DM
APPROVED BY	-

BREEN DESIGN GROUP
3825 DEL AMO BOULEVARD
TORRANCE, CA 90503
PH: 310 464 8404
WWW.BREENDESIGN.COM

REGISTERED PROFESSIONAL ENGINEER
DIEDMOND MAHMANI
NO. E20642
EXP. 03-31-26
ELECTRICAL
STATE OF CALIFORNIA

COPYRIGHT ©2024 BREEN DESIGN GROUP

DATE PLOTTED: 5/17/2022 4:43 PM
ORIGINAL SIZE: ARCH FULL BLEED E1 (36.00 X 42.00 INCHES)
BY: NICHO VILLARUEL
PLOT SCALE: 1:1
LAST SAVED: CCALBONERA
PLOT STYLE: BREEN DESIGN GROUP.STB
FILE NAME: H:\PROJECTS\138 CORP FOR BETTER HOUSING\24-001 - FRESNO SENIOR CENTER\01 CAD\SENIOR CENTER\01 LOW VOLTAGE SITE PLAN.DWG

GENERAL NOTES

1. WAPS TO BE MOUNTED TO CEILING AND WIRED BY CAT6A WITH POE HOMERUN TO PATCH PANEL INSIDE MDF/IDF ROOM.
2. CAT6A CABLES TO BE RUN AT ATTIC SPACE ABOVE CEILING AND SHOULD NOT EXCEED IT'S WORKING LIMIT. CONTRACTOR SHALL CONFIRM EXACT LENGTH OF EACH CABLE FROM RACK TO DROP.

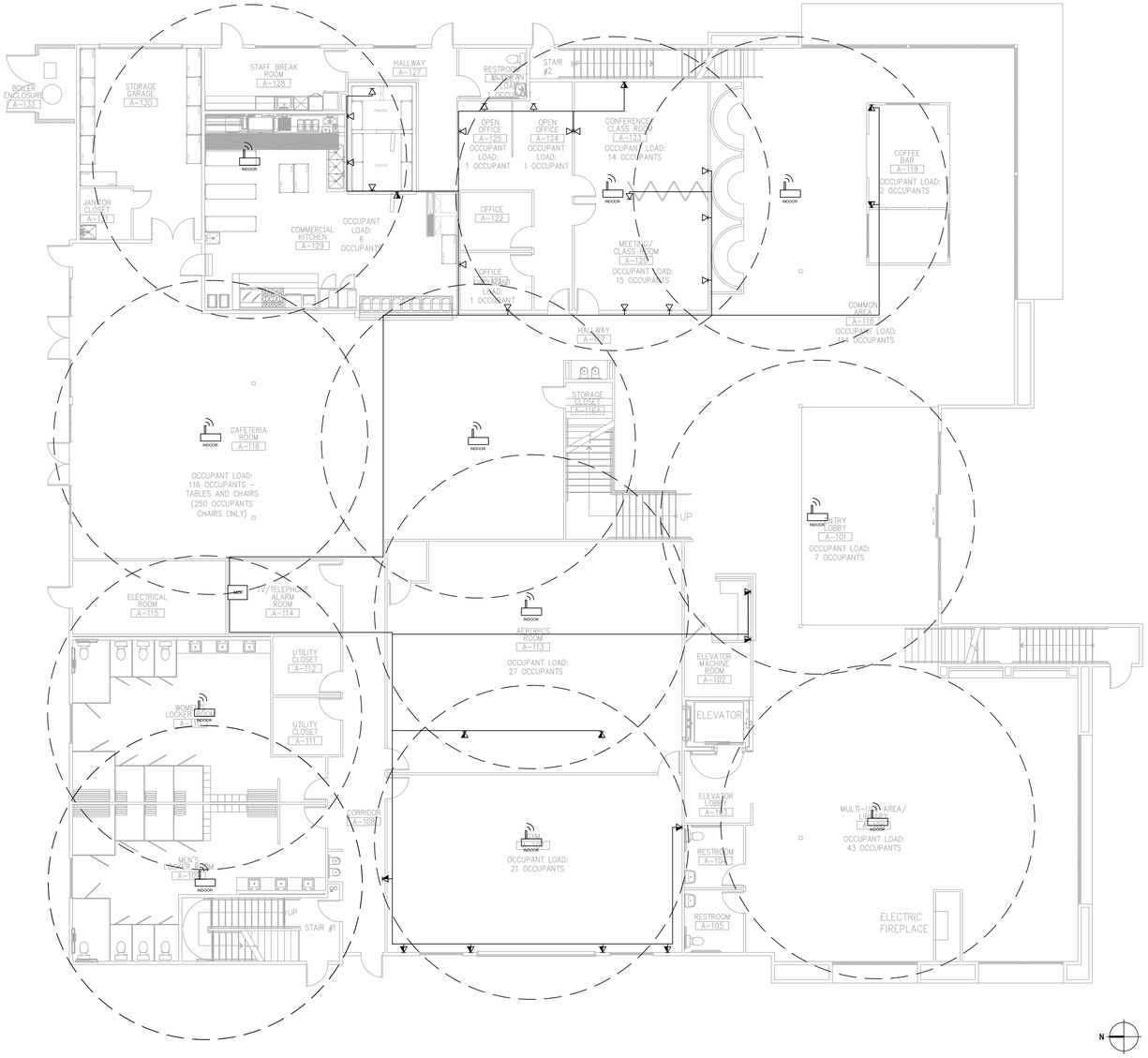

WIRE LEGEND	
SYMBOL	DESCRIPTION
CAT6A	CAT6A DATA CABLE

LOW VOLTAGE SYMBOLS LEGEND		
SYMBOL	DESCRIPTION	COUNT
	INDOOR WIRELESS ACCESS POINT	11
	WALL MOUNTED SINGLE-PORT DATA OUTLET	17
	WALL MOUNTED 2-PORT DATA OUTLET	14
	TOTAL DROPS	56

LOW VOLTAGE DATA & WAPFIRST FLOOR PLAN

DATE PLOTTED: 5/17/2022 4:43 PM
ORIGINAL SIZE: ARCH FULL BLEED E1 (36.00 X 42.00 INCHES)
BY: NICHO VILLARUEL
PLOT SCALE: 1:1
LAST SAVED: CCALBONERA
PLOT STYLE: BREEN DESIGN GROUP.STB
FILE NAME: H:\PROJECTS\138 CORP FOR BETTER HOUSING\24-001 - FRESNO SENIOR CENTER\01 - CAD\SENIOR CENTER\PACKAGE\LOW VOLTAGE\LV-2.1 LOW VOLTAGE DATA & WAPFIRST FLOOR PLAN.DWG

Y&M Architects
Y&M Architects
255 South Santa Fe Avenue, Suite 103
Los Angeles, CA 90012
Telephone: 213 623 2107
www.ymarch.com

DRAWN BY	JA,JP,NV
DESIGNED BY	JB
CHECKED BY	DM
APPROVED BY	-

BREEN DESIGN GROUP
3825 DEL AMO BOULEVARD
TORRANCE, CA 90503
PH: 310 464 9404
WWW.BREENDESIGN.COM

REGISTERED PROFESSIONAL ENGINEER DESMOND MANOKPHAN NO. E20642 EXP. 03-31-26 ELECTRICAL STATE OF CALIFORNIA

COPYRIGHT ©2024 BREEN DESIGN GROUP

FRESNO SENIOR CENTER

Integrated Community Development

Project. *	Developer. 20750 Ventura Boulevard, Suite 155 Woodland Hills, CA 91364	Project No.: 138-24-001	Scale: 1/8" = 1'-0"	Date 06.11.24	Page LV-2.1

GENERAL NOTES

1. WAPS TO BE MOUNTED TO CEILING AND WIRED BY CAT6A WITH POE HOMERUN TO PATCH PANEL INSIDE MDF/IDF ROOM.
2. CAT6A CABLES TO BE RUN AT ATTIC SPACE ABOVE CEILING AND SHOULD NOT EXCEED IT'S WORKING LIMIT. CONTRACTOR SHALL CONFIRM EXACT LENGTH OF EACH CABLE FROM RACK TO DROP.

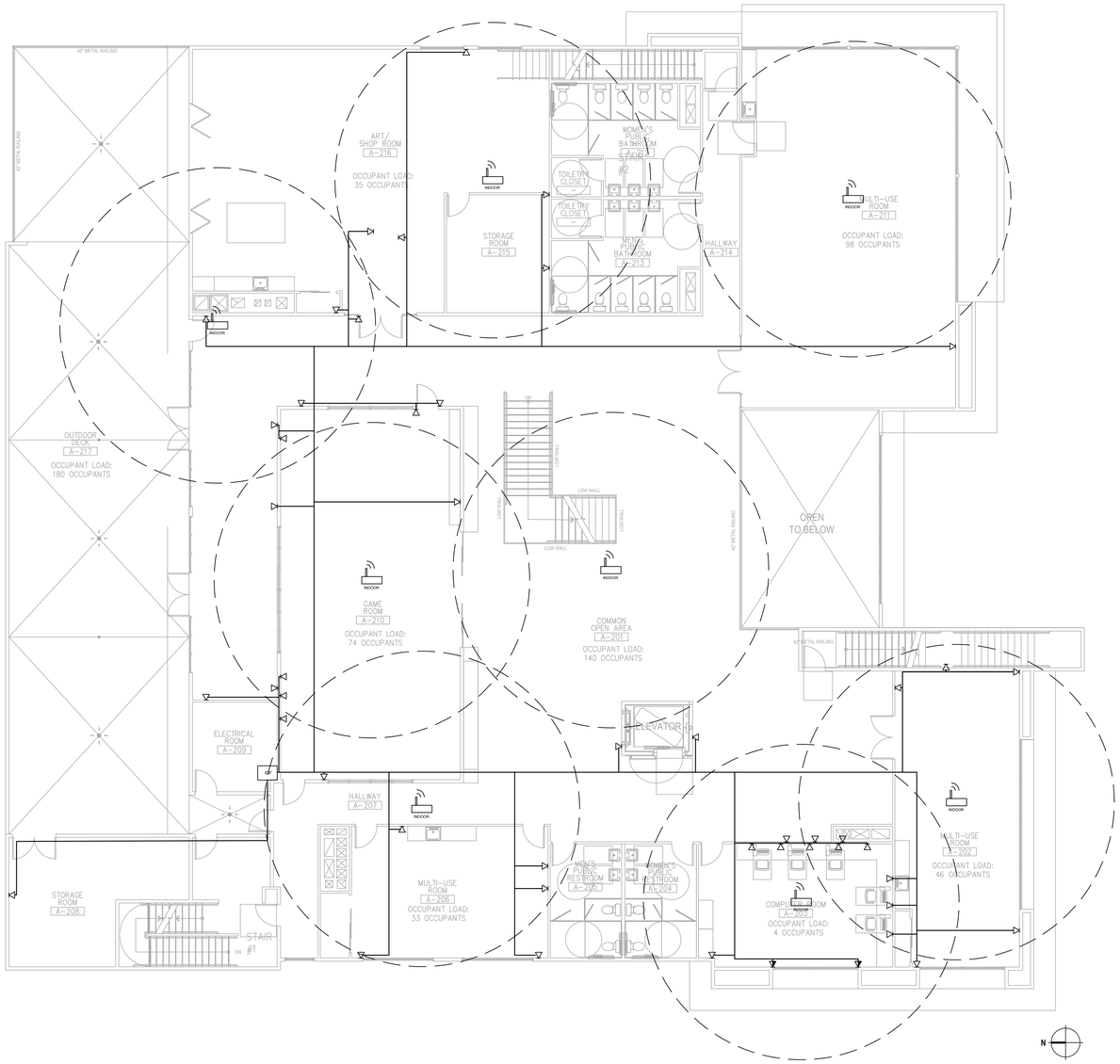

WIRE LEGEND	
SYMBOL	DESCRIPTION
CAT6A	CAT6A DATA CABLE

LOW VOLTAGE SYMBOLS LEGEND		
SYMBOL	DESCRIPTION	COUNT
	INDOOR WIRELESS ACCESS POINT	8
	WALL MOUNTED SINGLE-PORT DATA OUTLET	45
	WALL MOUNTED 2-PORT DATA OUTLET	2
	TOTAL DROPS	57

LOW VOLTAGE DATA & WAP SECOND FLOOR PLAN

DATE PLOTTED: 4/26/2024 8:40 PM
ORIGINAL SIZE: ARCH FULL BLEED E1 (30.00 X 42.00 INCHES)
BY: NICHO VILLARUEL
PLOT SCALE: 1:1
LAST SAVED: CCALBONGRA
PLOT STYLE: BREEN DESIGN GROUP.STB
FILE NAME: H:\PROJECTS\138 CORP FOR BETTER HOUSING\24-001 - FRESNO SENIOR CENTER\01 - CAD\SENIOR CENTER PACKAGE\LOW VOLTAGE\LV-2.2 LOW VOLTAGE DATA & WAP SECOND FLOOR PLAN.DWG

Y&M Architects
Y&M Architects
255 South Santa Fe Avenue, Suite 103
Los Angeles, CA 90012
Telephone: 213 623 2107
www.ymarch.com

COPYRIGHT ©2024 BREEN DESIGN GROUP

DRAWN BY	JA,JP,NV
DESIGNED BY	JB
CHECKED BY	DM
APPROVED BY	-

BREEN DESIGN GROUP
3825 DEL AMO BOULEVARD
TORRANCE, CA 90503
PH: 310 464 8404
WWW.BREENDESIGN.COM

REGISTERED PROFESSIONAL ENGINEER DESMOND MAHONY NO. E20642 EXP. 03-31-26 ELECTRICAL STATE OF CALIFORNIA

FRESNO SENIOR CENTER

Integrated Community Development

Project. *	Developer. 20750 Ventura Boulevard, Suite 155 Woodland Hills, CA 91364	Project No.: 138-24-001	Scale: 1/8" = 1'-0"	Date 06.11.24	Page LV-2.2

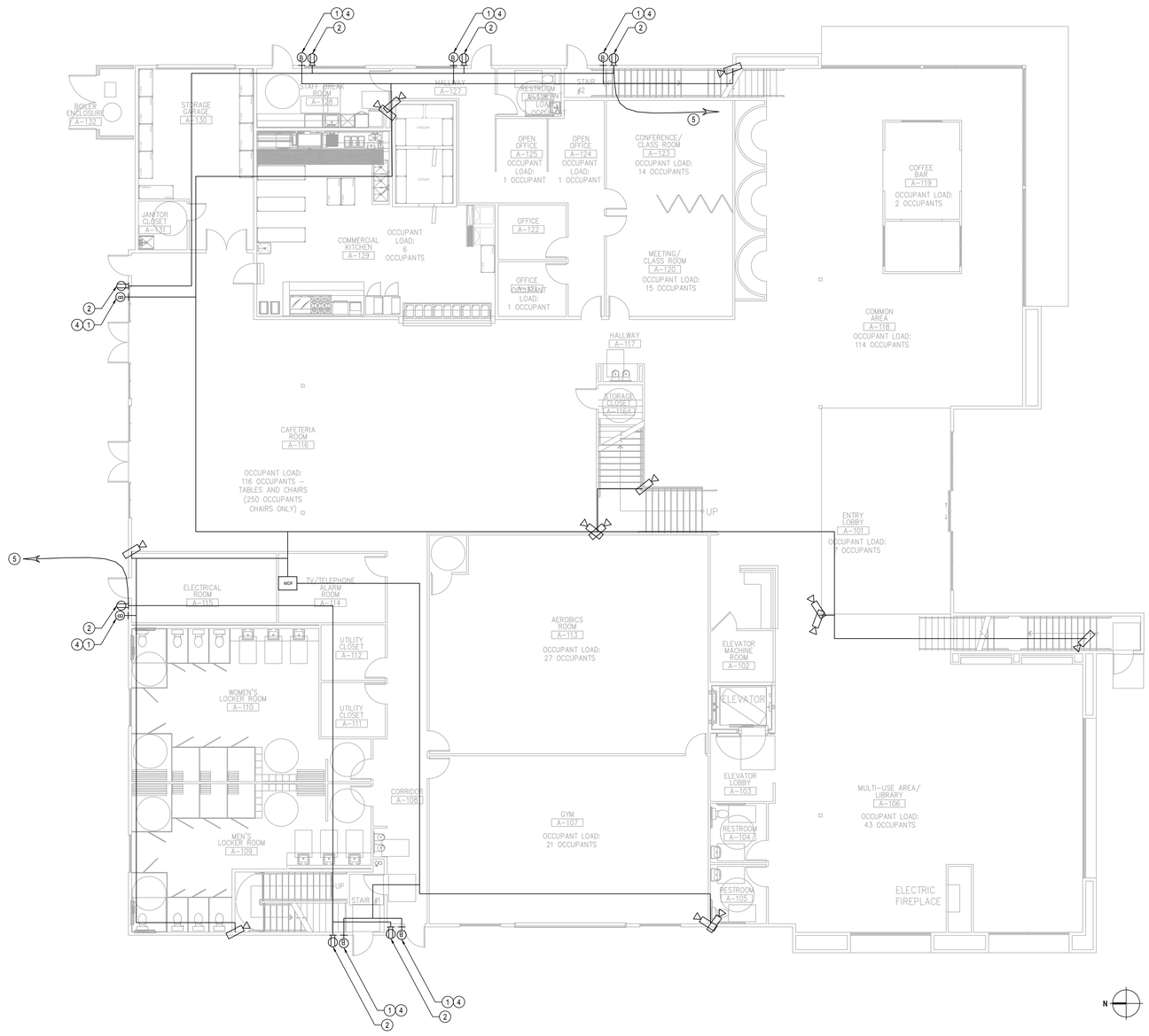

GENERAL NOTES

1. CCTV CAMERA SYSTEM HEADEND RECORDING EQUIPMENT LOCATED IN OFFICE FACILITY (WITHIN LOCK CABINET). EXACT LOCATION TO BE DETERMINED BY PROPERTY OFFICE MANAGEMENT.
2. CAT6A CABLES TO BE RUN AT ATTIC SPACE ABOVE CEILING AND SHOULD NOT EXCEED IT'S WORKING LIMIT. CONTRACTOR SHALL CONFIRM EXACT LENGTH OF EACH CABLE FROM RACK TO DROP.
3. CCTV CAMERA SYSTEM TV MONITOR WALL HUNG TO BE LOCATED IN OFFICE FACILITY. EXACT LOCATION TO BE DETERMINED BY PROPERTY OFFICE MANAGEMENT.

REFERENCE NOTES

1. ACCESS CONTROL DEVICE. REFER TO MANUFACTURER SUBMITTAL FOR REQUIREMENTS. FINAL POSITION OF DKS DEVICES SHALL BE VERIFIED PRIOR TO BID.
2. ELECTRICAL CONTRACTOR SHALL PROVIDE 120V POWER FOR DKS TELEPHONE ENTRY SYSTEM CONTROLLER. REFER TO MANUFACTURER SUBMITTAL FOR REQUIREMENTS. ALL ELECTRICAL DEVICES AND WIRING TO BE PROVIDED BY THE ELECTRICAL CONTRACTOR. VERIFY PRIOR TO BID.
3. ELECTRICAL CONTRACTOR SHALL CONNECT TO A SPARE 120V CIRCUIT IN THE EXISTING PANEL SERVING THIS AREA. VERIFY PRIOR TO BID.
4. ACCESS CONTROL DEVICES CONNECTIVITY IF WIRELESS OR WIRED SHALL BE VERIFY PRIOR BID.
5. PROVIDE NEW 20A CIRCUIT BREAKER. NEW CIRCUIT BREAKER SHALL MATCH EXISTING TYPE AND AIC RATING.
6. CAMERA DIRECTION SHALL BE CONFIRMED DURING CONSTRUCTION. CAMERAS SHALL BE PLACED AT WALL OR CEILING AS DIRECTED BY THE ARCHITECT. REFER TO CAMERA SPECIFICATION FOR REQUIREMENTS. VERIFY PRIOR TO BID.

6A. FINAL LOCATION OF CAMERAS SHALL BE DETERMINED DURING CONSTRUCTION AS DIRECTED BY THE ARCHITECT. CAMERAS MUST ONLY BE POINTED TO COMMON SPACES. VERIFY PRIOR TO BID.

7. CAMERAS WILL BE WIRED USING CAT6 TO APPROPRIATE IDF/MDF. VERIFY PRIOR TO BID.

7A. TO CONFIRM CAT6 CABLE LENGTH DURING CONSTRUCTION. CABLE LENGTH SHOULD NOT EXCEED ITS WORKING LIMIT.

WIRE LEGEND

SYMBOL	DESCRIPTION
—— CAT6A ——	CAT6A DATA CABLE

NUMBER OF CABLES TO RUN BACK FROM DEVICES TO MDF ROOM

MOUNTING	MODEL NAME	DESCRIPTION	COUNT
WALL MOUNTED	MV-SERIES	WALL MOUNTED VARIFOCAL CCTV	13
CEILING MOUNTED	MV-SERIES	CEILING MOUNTED FISHEYE CCTV	0
		SUB-TOTAL	0
		TOTAL (ADD 10% ALLOWANCE)	14

LOW VOLTAGE SYMBOLS LEGEND

SYMBOL	DESCRIPTION	COUNT
	WALL MOUNTED VARIFOCAL CCTV	13
	DOOR ACCESS DEVICE	6
	GROUNDED TYPE DUPLEX RECEPTACLE, 20A NEMA 5-20R	6
	TOTAL DROPS	##

LOW VOLTAGE CCTV & ACCESS CONTROL FIRST FLOOR PLAN

DATE PLOTTED: 5/17/2022 4:43 PM
ORIGINAL SIZE: ARCH FULL BLEED E1 (30.00 X 42.00 INCHES)
BY: NICHO VILLARUEL
PLOT SCALE: 1:1
LAST SAVED: NV
PLOT STYLE: BREEN DESIGN GROUP.STB
FILE NAME: H:\PROJECTS\138 CORP FOR BETTER HOUSING\24-001 - FRESNO SENIOR CENTER\1 - CAD\SENIOR CENTER PACKAGE\LOW VOLTAGE\LV-2-3 LOW VOLTAGE CCTV & ACCESS CONTROL FIRST FLOOR PLAN.DWG

Y&M Architects
Y&M Architects
255 South Santa Fe Avenue, Suite 103
Los Angeles, CA 90012
Telephone: 213 623 2107
www.ymarch.com

DRAWN BY	JA,JP,NV
DESIGNED BY	JB
CHECKED BY	DM
APPROVED BY	-

BREEN DESIGN GROUP
3825 DEL AMO BOULEVARD
TORRANCE, CA 90503
PH: 310 464 8404
WWW.BREENDESIGN.COM

REGISTERED PROFESSIONAL ENGINEER DIMOND MAHONEY NO. E20642 EXP. 03-31-26 ELECTRICAL STATE OF CALIFORNIA

FRESNO SENIOR CENTER

Integrated Community Development

06.11.24 **LV-2.3**

Project. * | Developer. 20750 Ventura Boulevard, Suite 155 Woodland Hills, CA 91364 | Project No.: 138-24-001 | Scale: 1/8" = 1'-0" | Date | Page

COPYRIGHT ©2024 BREEN DESIGN GROUP

GENERAL NOTES

1. CCTV CAMERA SYSTEM HEADEND RECORDING EQUIPMENT LOCATED IN OFFICE FACILITY (WITHIN LOCK CABINET). EXACT LOCATION TO BE DETERMINED BY PROPERTY OFFICE MANAGEMENT.
2. CAT6A CABLES TO BE RUN AT ATTIC SPACE ABOVE CEILING AND SHOULD NOT EXCEED IT'S WORKING LIMIT. CONTRACTOR SHALL CONFIRM EXACT LENGTH OF EACH CABLE FROM RACK TO DROP.
3. CCTV CAMERA SYSTEM TV MONITOR WALL HUNG TO BE LOCATED IN OFFICE FACILITY. EXACT LOCATION TO BE DETERMINED BY PROPERTY OFFICE MANAGEMENT.

REFERENCE NOTES

1. ACCESS CONTROL DEVICE. REFER TO MANUFACTURER SUBMITTAL FOR REQUIREMENTS. FINAL POSITION OF DKS DEVICES SHALL BE VERIFIED PRIOR TO BID.
2. ELECTRICAL CONTRACTOR SHALL PROVIDE 120V POWER FOR DKS TELEPHONE ENTRY SYSTEM CONTROLLER. REFER TO MANUFACTURER SUBMITTAL FOR REQUIREMENTS. ALL ELECTRICAL DEVICES AND WIRING TO BE PROVIDED BY THE ELECTRICAL CONTRACTOR. VERIFY PRIOR TO BID.
3. ELECTRICAL CONTRACTOR SHALL CONNECT TO A SPARE 120V CIRCUIT IN THE EXISTING PANEL SERVING THIS AREA. VERIFY PRIOR TO BID.
4. ACCESS CONTROL DEVICES CONNECTIVITY IF WIRELESS OR WIRED SHALL BE VERIFY PRIOR BID.
5. PROVIDE NEW 20A CIRCUIT BREAKER. NEW CIRCUIT BREAKER SHALL MATCH EXISTING TYPE AND AIC RATING.
6. CAMERA DIRECTION SHALL BE CONFIRMED DURING CONSTRUCTION. CAMERAS SHALL BE PLACED AT WALL OR CEILING AS DIRECTED BY THE ARCHITECT. REFER TO CAMERA SPECIFICATION FOR REQUIREMENTS. VERIFY PRIOR TO BID.

6A. FINAL LOCATION OF CAMERAS SHALL BE DETERMINED DURING CONSTRUCTION AS DIRECTED BY THE ARCHITECT. CAMERAS MUST ONLY BE POINTED TO COMMON SPACES. VERIFY PRIOR TO BID.

7. CAMERAS WILL BE WIRED USING CAT6 TO APPROPRIATE IDF/MDF. VERIFY PRIOR TO BID.

7A. TO CONFIRM CAT6 CABLE LENGTH DURING CONSTRUCTION. CABLE LENGTH SHOULD NOT EXCEED ITS WORKING LIMIT.

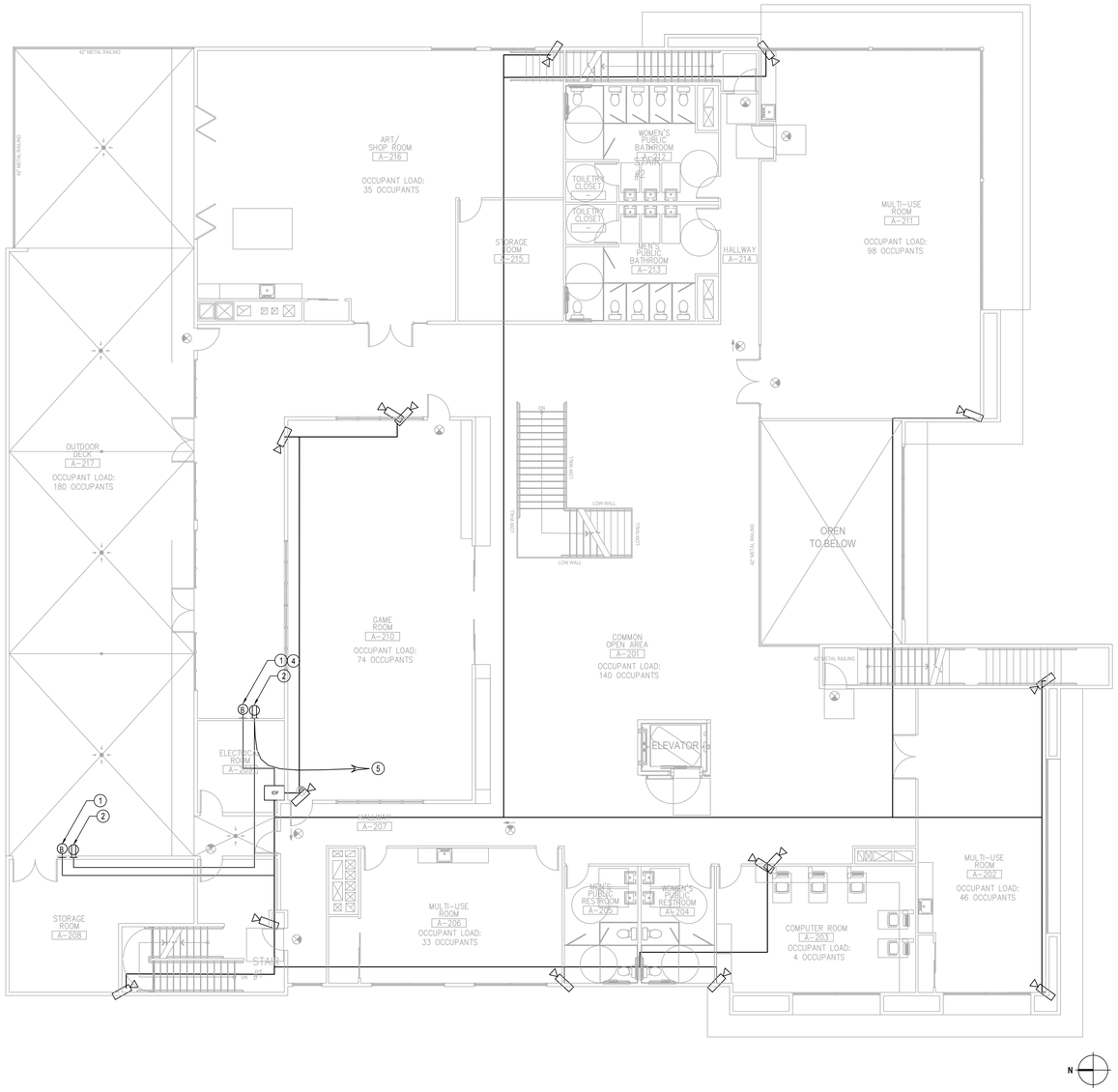

WIRE LEGEND	
SYMBOL	DESCRIPTION
CAT6A	CAT6A DATA CABLE

NUMBER OF CABLES TO RUN BACK FROM DEVICES TO MDF ROOM

MOUNTING	MODEL NAME	DESCRIPTION	COUNT
WALL MOUNTED	MV-SERIES	WALL MOUNTED VARIFOCAL CCTV	13
CEILING MOUNTED	MV-SERIES	CEILING MOUNTED FISHEYE CCTV	0
		SUB-TOTAL	0
		TOTAL (ADD 10% ALLOWANCE)	14

LOW VOLTAGE SYMBOLS LEGEND

SYMBOL	DESCRIPTION	COUNT
	WALL MOUNTED VARIFOCAL CCTV	13
	DOOR ACCESS DEVICE	6
	GROUNDED TYPE DUPLEX RECEPTACLE, 20A NEMA 5-20R	6
	TOTAL DROPS	##

LOW VOLTAGE CCTV & ACCESS CONTROL SECOND FLOOR PLAN

DATE PLOTTED: 4/26/2024 8:40 PM
ORIGINAL SIZE: ARCH FULL BLEED E1 (30.00 X 42.00 INCHES)
BY: NICHO VILLARUEL
PLOT SCALE: 1:1
LAST SAVED: JP
PLOT STYLE: BREEN DESIGN GROUP.STB
FILE NAME: H:\PROJECTS\138 CORP FOR BETTER HOUSING\24-001 - FRESNO SENIOR CENTER\01 - CAD\SENIOR CENTER PACKAGE\LOW VOLTAGE\LV-2.4 LOW VOLTAGE CCTV & ACCESS CONTROL SECOND FLOOR PLAN.DWG

Y&M Architects
Y&M Architects
255 South Santa Fe Avenue, Suite 103
Los Angeles, CA 90012
Telephone: 213 623 2107
www.ymarch.com

DRAWN BY	JA,JP,NV
DESIGNED BY	JB
CHECKED BY	DM
APPROVED BY	-

BREEN DESIGN GROUP
3825 DEL AMO BOULEVARD
TORRANCE, CA 90503
PH: 310 464 8404
WWW.BREENDESIGN.COM

REGISTERED PROFESSIONAL ENGINEER DESMOND MAHONY NO. E20642 EXP. 03-31-26 ELECTRICAL STATE OF CALIFORNIA

FRESNO SENIOR CENTER

Integrated Community Development

06.11.24 **LV-2.4**

Project. * | Developer. 20750 Ventura Boulevard, Suite 155 Woodland Hills, CA 91364 | Project No.: 138-24-001 | Scale: 1/8" = 1'-0" | Date | Page

COPYRIGHT ©2024 BREEN DESIGN GROUP

GENERAL NOTES

1 -

REFERENCE NOTES

1 -

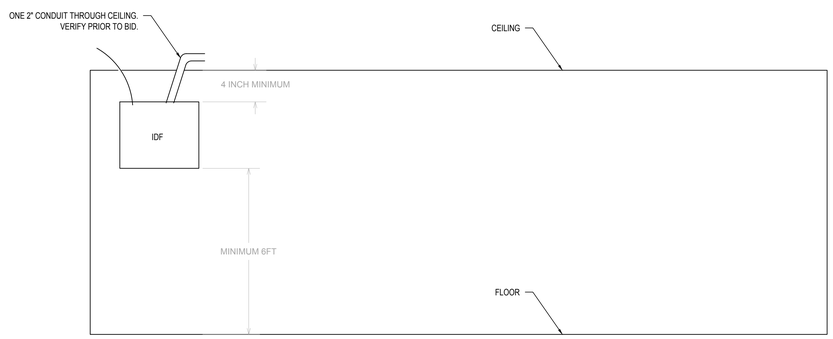

IDF DETAILS 2

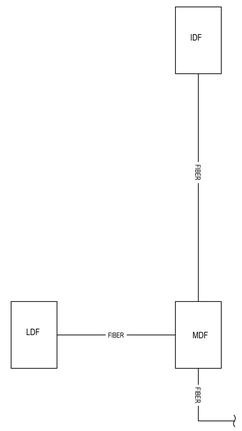

WIRE LEGEND	
SYMBOL	DESCRIPTION
FIBER	FIBER OPTIC CABLE

LOW VOLTAGE SINGLE LINE DIAGRAM 1

LOW VOLTAGE SINGLE LINE DIAGRAM

DATE PLOTTED: 5/17/2022 4:43 PM
ORIGINAL SIZE: ARCH FULL BLEED E1 (36.00 X 42.00 INCHES)
BY: NICHO VILLARUEL
PLOT SCALE: 1:1
LAST SAVED: JAVISO
PLOT STYLE: BREEN DESIGN GROUP.STB
FILE NAME: H:\PROJECTS\138.CORP FOR BETTER HOUSING\24-001 - FRESNO SENIOR CENTER\01 - CAD\SENIOR CENTER PACKAGE\LOW VOLTAGE\LV-4.1 LOW VOLTAGE SINGLE LINE DIAGRAM.DWG

Y&M Architects

Y&M Architects
255 South Santa Fe Avenue, Suite 103
Los Angeles, CA 90012
Telephone: 213 623 2107
www.ymarch.com

DRAWN BY	JA,JP,NV
DESIGNED BY	JB
CHECKED BY	DM
APPROVED BY	-

BREEN DESIGN GROUP
3825 DEL AMO BOULEVARD
TORRANCE, CA 90503
PH: 310 464 8404
WWW.BREENDESIGN.COM

REGISTERED PROFESSIONAL ENGINEER
DESMOND MATHOFER
NO. E20642
EXP. 03-31-26
ELECTRICAL
STATE OF CALIFORNIA

FRESNO SENIOR CENTER

Integrated Community Development

Project. *	Developer. 20750 Ventura Boulevard, Suite 155 Woodland Hills, CA 91364	Project No.: 138-24-001	Scale: N.T.S.	Date 06.11.24	Page LV-4.1

COPYRIGHT ©2024 BREEN DESIGN GROUP

GENERAL NOTES

1. FOR IDF ANCHORAGE DETAIL, REFER TO STRUCTURAL SHEET XX/S-X.X.
2. CONTRACTOR SHALL PROVIDE NEW SWITCHES AND SFP FIBER CABLES FOR SWITCH CONNECTIVITY.
3. CONTRACTOR SHALL CONNECT PATCH PANELS TO SWITCHES USING PATCH CORDS MINIMUM OF 0.5" TO 2' FOR CABLE MANAGEMENT.

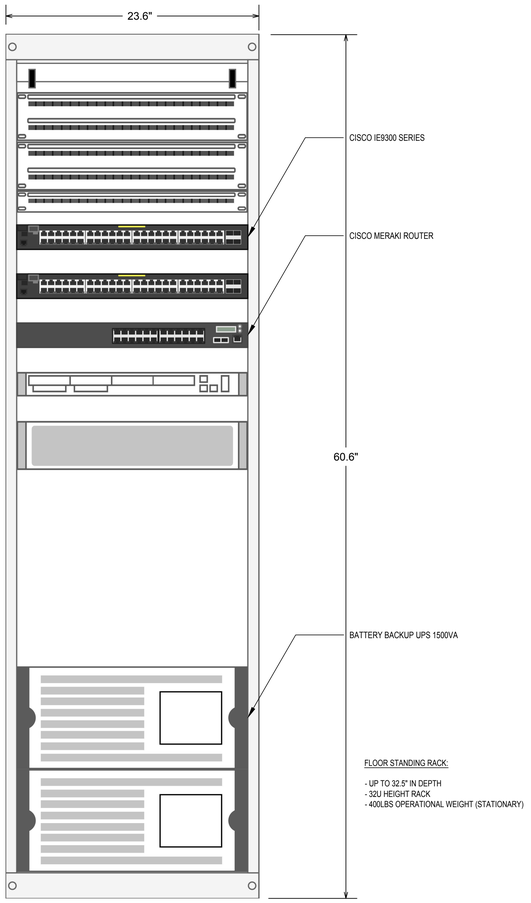

MDF RACK DETAILS 3

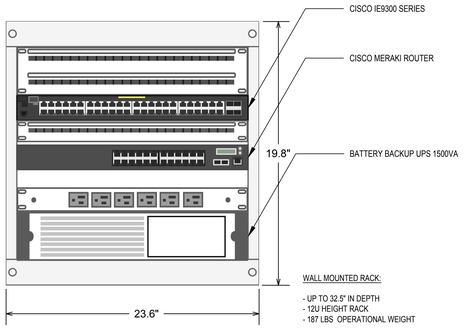

IDF RACK DETAILS 2

LOW VOLTAGE DETAILS

DATE PLOTTED: 5/17/2022 4:43 PM
ORIGINAL SIZE: ARCH FULL BLEED E1 (36.00 X 42.00 INCHES)
BY: NICHO VILLARUEL
PLOT SCALE: 1:1
LAST SAVED: NV
PLOT STYLE: BREEN DESIGN GROUP STB
FILE NAME: H:\PROJECTS\138 CORP FOR BETTER HOUSING\24-001 - FRESNO SENIOR CENTER\01 - CAD\SENIOR CENTER PACKAGE\LOW VOLTAGE\LV-5.1 LOW VOLTAGE DETAILS.DWG

Y&M Architects

Y&M Architects
255 South Santa Fe Avenue, Suite 103
Los Angeles, CA 90012
Telephone: 213 623 2107
www.ymarch.com

DRAWN BY	JA,JP,NV
DESIGNED BY	JB
CHECKED BY	DM
APPROVED BY	-

BREEN DESIGN GROUP
3825 DEL AMO BOULEVARD
TORRANCE, CA 90503
PH: 310 464 8404
WWW.BREENDESIGN.COM

REGISTERED PROFESSIONAL ENGINEER DESMOND MANOKIAN NO. E20642 EXP. 03-31-26 ELECTRICAL STATE OF CALIFORNIA

FRESNO SENIOR CENTER

Integrated Community Development

Project. *	Developer. 20750 Ventura Boulevard, Suite 155 Woodland Hills, CA 91364	Project No.: 138-24-001	Scale: N.T.S.	Date 06.11.24	Page LV-5.1

COPYRIGHT ©2024 BREEN DESIGN GROUP

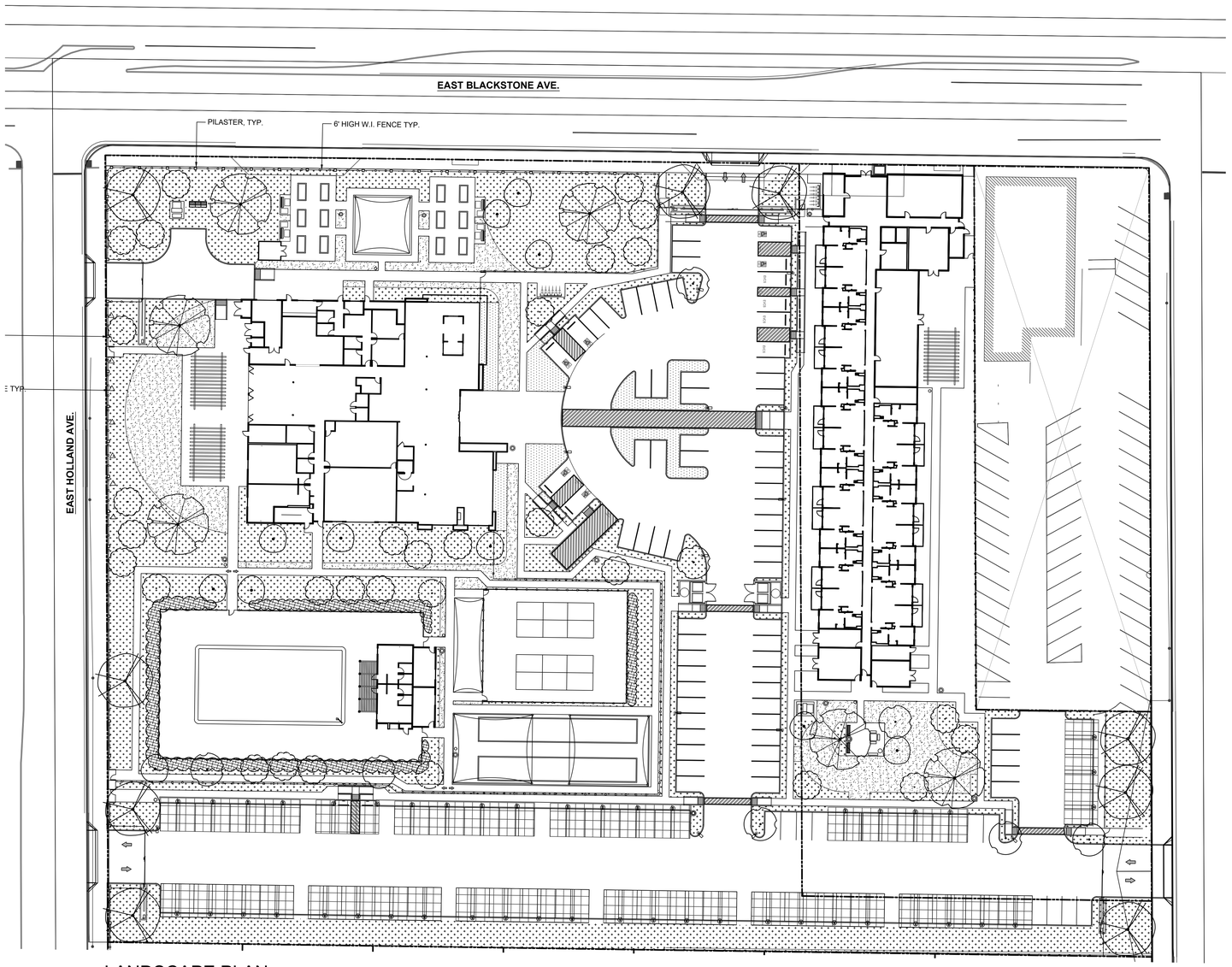

LANDSCAPE PLAN

TREE LEGEND

SYMBOL	COMMON NAME / BOTANICAL NAME / SIZE / QUANTITY / TYPE / WUCOLS
	CERCIS OCCIDENTALIS WESTERN REDBUD 15 GAL / 11 / DECIDUOUS / LOW
	CHILOPSIS LINEARIS 'BURGUNDY' DEEPISH PURPLISH FLOWERING DESERT WILLOW 15 GAL / 28 / DECIDUOUS / LOW
	GEIJERA PARVIFLORA AUSTRALIAN WILLOW 15 GAL / 8 / EVERGREEN / LOW
	LAGERSTROEMIA X 'NATCHEZ' - STANDARD NATCHEZ CRAPE MYRTLE 15 GAL / 2 / DECIDUOUS / LOW
	KOELREUIA PANICULATA GOLDEN RAIN TREE 24 INCH BOX / 9 / DECIDUOUS / LOW
	PISTACIA CHINENSIS - STANDARD CHINESE PISTACHE 24 INCH BOX / 6 / DECIDUOUS / LOW

GROUNDCOVER LEGEND

SYMBOL	COMMON NAME / BOTANICAL NAME / SIZE / QUANTITY / WUCOLS
	ARTIFICIAL TURF AS SELECTED BY OWNERS REP INSTALL PER MANUFACTURER'S RECOMMENDATIONS
NO SYMBOL	MULCH 3" LAYER IN ALL BEDS

SHRUB LEGEND

	BOTANICAL NAME / COMMON NAME / QUANTITY / SIZE / SIZE AT MATURITY (HT X WIDTH) / WUCOLS
	ACHILLEA MILLEFOLLIA 'ISLAND PINK', "SONOMA", 'LITTLE MOONSHINE' COMMON YARROW - / 1 GAL / 1-2' x 1-2' / LOW
	ARTEMISIA 'POWIS CASTLE' POWIS CASTLE WORMWOOD - / 1 GAL / 2-4' x 4-6' / LOW
	BACCHARIS P. "PIGEON POINT" PIGEON POINT COYOTE BUSH - / 5 GAL / 2' x 6-8' / LOW
	IRIS PACIFIC COAST HYBRID PACIFIC COAST HYBRID IRIS - / 1 GAL / 1-3' x 1-3' / LOW
	FESTUCA 'ELIJAH BLUE' ELIJAH BLUE FESCUE - / 1 GAL / 1' X 1' / LOW
	HESPERALOE PARVIFLORA 'BRAKELIGHTS' BRAKELIGHTS RED YUCCA - / 1 GAL / 2' x 2' / LOW
	MUHLENBERGIA CAPILLARIS PINK MUHLY GRASS - / 5 GAL / 3-4' x 3-4' / LOW
	MYRTUS COMMUNIS 'COMPACTA' DWARF MYRTLE - / 5 GAL / 2-4' TALL X 2-4' WIDE / LOW
	OLEA E. 'LITTLE OLLIE' LITTLE OLLIE - / 5 GAL / 4-6' X 4-6' / LOW
	PENSTEMON 'BOP' BOP PENSTEMON - / 1 GAL / 1-3' x 1-2' / LOW
	RHAMNUS CALIFORNICA 'MOUND SAN BRUNO' COFFEEBERRY - / 5 GAL / 3-5' X 8-10' / LOW

SCREENING SHRUB AND VINE LEGEND

	BOTANICAL NAME / COMMON NAME / QUANTITY / SIZE / SIZE AT MATURITY (HT X WIDTH) / WUCOLS
	NANDINA DOMESTICA 'MONUM' PLUM PASSION HEAVENLY BAMBOO - / 5 GAL / 4-5' x 2-3' / LOW
	RHAMNUS CALIFORNICA 'MOUND SAN BRUNO' COFFEEBERRY - / 5 GAL / 4-6' X 4-6' / LOW
	HARDENBERGIA V. 'HAPPY WANDERER' PURPLE VINE LILAC - / 1 GAL / 12-16' / LOW / TRAIN ON FENCE

ACCENT FLOWERING SHRUBS LEGEND

	BOTANICAL NAME / COMMON NAME / QUANTITY / SIZE / SIZE AT MATURITY (HT X WIDTH) / WUCOLS
	ACHILLEA MILLEFOLLIA 'ISLAND PINK', "SONOMA", 'LITTLE MOONSHINE' COMMON YARROW - / 1 GAL / 1-2' x 1-2' / LOW
	IRIS PACIFIC COAST HYBRID PACIFIC COAST HYBRID IRIS - / 1 GAL / 1-3' x 1-3' / LOW
	LANTANA 'NEW GOLD' NEW GOLD LANTANA - / 1 GAL / 1-3' x 4-6' / LOW
	LOMONDRA LONGIFOLIA 'LOMLON' LIME TUFF DWARF MAT RUSH - / 1 GAL / 3' x 1.5' / LOW
	PENSTEMON 'BOP' BOP PENSTEMON - / 1 GAL / 1-3' x 1-2' / LOW

IRRIGATION NOTES

AUTOMATIC IRRIGATION WILL BE PROVIDED FOR ALL PLANTING BEDS USING DRIP IRRIGATION, DEEP ROOT BUBBLERS TO EACH TREE ON SEPARATE VALVES, AND A WEATHER BASED CONTROLLER WITH A RAIN SENSOR SHUT OFF. IRRIGATION WILL COMPLY WITH FMC 12-306-23 WATER EFFICIENT LANDSCAPE STANDARDS.

0 30' 60'

CONTACT 811 BEFORE YOU DIG 811 SAFE DIGGING PAYS OFF

EcoFolia Design
landscape architecture
www.ecofolia.net
925-323-5696

The above drawings, specifications, ideas, designs and arrangements represented thereby are and shall remain property of the Architect (YM Architects), and no part thereof shall be copied, disclosed to others or used in connection with any other project other than the specific project for which they have been prepared and developed, without the written consent of the Architect (YM Architects). Visual contact with these drawings or specifications shall constitute conclusive evidence of acceptance of these restrictions. Written dimensions on these drawings shall have pre-over scaled dimensions. Contractors shall verify and be responsible for all dimensions and conditions on the job, and this office must be notified of any variations from the dimensions and conditions shown by these drawings. Shop details must be submitted to this office for approval before proceeding with fabrication. 2024 ©

Y&M Architects

Y&M Architects
255 South Santa Fe Avenue, Suite 103
Los Angeles, CA 90012
Telephone: 213 623 2107
www.ymarch.com

FRESNO SENIOR CENTER

Project. *

Developer. 20750 Ventura Boulevard, Suite 155
Woodland Hills, CA 91364

Integrated Community Development

PRELIMINARY LANDSCAPE PLAN

06.11.24
Date

L-1
Page

HEATING,VENTILATING, AND AIR CONDITIONING (HVAC) CONSTRUCTION NOTES

TYPE OF OCCUPANCY: R-2/B/S-2, TYPE OF CONSTRUCTION: TYPE I-A CONCRETE / TYPE-III-A WOOD FRAME

1. CONCEALED SPACES, CIRCULATING AIR. NO COMBUSTIBLE MATERIAL (SUCH AS EXPOSED COMMUNICATION CABLES, INSULATED WIRES, PLASTIC TUBING OR PIPING, PIPE INSULATION, INSULATED PAN INSULATION) SHALL BE LOCATED IN SPACES USED TO CONVEY CIRCULATING AIR SUPPLY. WHEN COMBUSTIBLE MATERIAL IS TO BE LOCATED IN THE ABOVE SPACES, IT SHALL BE APPROVED BY LOCAL AUTHORITY FOR SUCH INSTALLATION.

2. CODES AND PERMITS: ALL EQUIPMENT, INSTALLATION, ETC., SHALL CONFORM TO LOCAL ELECTRICAL, MECHANICAL AND OTHER APPLICABLE CODES. UNLESS OTHERWISE AGREED, CONTRACTOR SHALL OBTAIN AND PAY FOR ALL PERMITS AND INSPECTIONS. COPIES OF ALL PERMITS AND INSPECTION REPORTS SHALL BE SUBMITTED TO THE ARCHITECT. APPLICABLE CODES INCLUDE, BUT ARE NOT LIMITED TO:

   - 2022 CALIFORNIA ADMINISTRATIVE CODE (CAC) (PART 1, TITLE 24, CCR)
   - 2022 CALIFORNIA BUILDING CODE (CBC) (PART 2, TITLE 24, CCR)
     VOL 1 & VOL 2 OF PART 2
   - 2022 CALIFORNIA RESIDENTIAL CODE (CRC) (PART 2.5, TITLE 24, CCR)
   - 2022 CALIFORNIA ELECTRICAL CODE (CEC) (PART 3, TITLE 24, CCR)
     2017 NFPA 70: NATIONAL ELECTRIC CODE (NEC)
   - 2022 CALIFORNIA MECHANICAL CODE (CMC) (PART 4, TITLE 24, CCR)
     2018 UNIFORM MECHANICAL CODE (UMC)
   - 2022 CALIFORNIA PLUMBING CODE (CPC) (PART 5, TITLE 24, CCR)
     2018 UNIFORM PLUMBING CODE (UPC)
   - 2022 CALIFORNIA ENERGY CODE (CEC) (PART 6, TITLE 24, CCR)
   - 2022 CALIFORNIA FIRE CODE (CFC) (PART 9, TITLE 24, CCR)
   - 2022 CALIFORNIA GREEN BUILDING CODE (CGBC) (PART 11, TITLE 24, CCR)
   - 2022 CALIFORNIA REFERENCED STANDARDS CODE (PART 12, TITLE 24, CCR)

3. MATERIALS: ALL MATERIALS, APPLIANCES AND EQUIPMENT SHALL BE OF THE MAKE, BRAND AND QUALITY SPECIFIED. THEY SHALL BE NEW, CLEAN, FREE FROM DEFECTS, AND SHALL BE THE BEST OF THEIR RESPECTIVE KIND.

4. DUCTWORK:

   A. DUCTWORK SHALL BE CONSTRUCTED IN ACCORDANCE WITH CALIFORNIA MECHANICAL CODE, SMACNA-2006, AND UL 181 STANDARDS.

   B. DUCTWORK SHALL BE GALVANIZED STEEL. GAUGES OF METAL FOR ROUND SPIRAL DUCT SHALL BE AS FOLLOWS (UNLESS NOTED OTHERWISE ON THE DRAWINGS):

	DUCTS	FITTINGS
1. THRU 12" DIAMETER	26 GAUGE	26 GAUGE
2. 14" THRU 24" DIAMETER	24 GAUGE	24 GAUGE
3. 26" THRU 36" DIAMETER	22 GAUGE	20 GAUGE

   ROUND AND OVAL SPIRAL DUCTS (FITNESS) SHALL BE CONTINUOUS SPIRAL SEAM UNITS, WITH FACTORY SLIP FITTINGS & COUPLINGS, SECURED WITH SHEET METAL SCREWS OR DRIVE RIVETS.

   C. 24 GAUGE DOUBLE THICKNESS TURNING VANES HELD FIRMLY BY TWO 24 GAUGE 2-1/4" WIDE CRIMPED RAIL ASSEMBLIES SIMILAR TO DURO-DYNE VANE RAIL ASSEMBLIES SHALL BE USED ON ALL 90-DEG. DUCT TURNS.

   D. ALL DUCT JOINTS SHALL BE SEALED AIR TIGHT WITH APPROVED SEALER & DUCT TAPE.

   E. FLEXIBLE DUCT USED FOR CONDITIONED AIR SHALL BE U.L. APPROVED STATE FIRE MARSHALL LISTED NON-COMBUSTIBLE, VINYL COATED, WIRE REINFORCED FIBERGLASS, WITH MAXIMUM CONDUCTANCE OF .30. DUCT SHALL HAVE A MINIMUM LENGTH OF THREE FEET AND A MAXIMUM LENGTH OF FIVE FEET (FOR NON-RESIDENTIAL AREAS). DUCTS SHALL BE INSTALLED FREE OF KINKS & SUPPORTS ON 36" CENTERS WITH 3/4" WIDE STRAP HANGERS. FITTINGS SHALL BE SHEET METAL. JOINTS & CONNECTIONS SHALL BE MADE WITH 1/2" WIDE METAL BANDS WITH NOT LESS THAN 2 SHEET METAL SCREWS EACH.

   F. FLEXIBLE DUCT SIZING SHALL BE PER DIFFUSER SCHEDULE - SAME SIZE AS DIFFUSER NECK. TRANSITION AS NEEDED FROM SMALLER DIAMETER HARD DUCT TO LARGER DIAMETER FLEX DUCT.

   G. MANUAL VOLUME DAMPERS, U.O.N. AS OPPOSED BLADE DAMPERS, SHALL BE INSTALLED AS A MEANS TO BALANCE AIR FLOW AT ALL DIFFUSERS AND REGISTERS. DAMPER BLADES IN FITTINGS SHALL BE 22 GAUGE AND PROVIDED WITH SHAFT AND LOCKING QUADRANT.

   H. DUCT HANGERS SHALL BE ATTACHED TO HORIZONTAL SLABS WITH ANGLE CLIPS SECURED WITH INSERTS, NAILED TO VERTICAL WALLS, BOLTED TO BEAMS & JOISTS, SPACED BETWEEN SPANCRETE SECTION, HUNG 3/8" REBAR 6" LONG ABOVE THE METAL BAR AND/OR AS APPROVED BY THE ARCHITECT.

   I. DUCTWORK SHALL COMPLY WITH ACOUSTICAL REQUIREMENTS BASED ON ACOUSTICAL REPORT. MAINLY, ACOUSTICAL LINING LENGTHS SHALL BE MAINTAINED AS SPECIFIED ON THE DRAWINGS. IF ANY FIELD CHANGES NEED TO BE MADE, THE CONTRACTOR SHALL CONSULT THE ENGINEERING OR ARCHITECTURAL TEAM TO VERIFY THAT THE CHANGES WILL COMPLY WITH THE ACOUSTICAL REQUIREMENTS.

   J. DUCT SYSTEMS ARE SIZED, DESIGNED, AND EQUIPMENT IS SELECTED USING THE FOLLOWING METHODS:

      1. ESTABLISH HEAT LOSS AND HEAT GAIN VALUES ACCORDING TO ANSI/ACCA 2 MANUAL J-2011 OR EQUIVALENT.

      2. SIZE DUCT SYSTEMS ACCORDING TO ANSI/ACCA 1 MANUAL D-2009 OR EQUIVALENT.

      3. SELECT HEATING AND COOLING EQUIPMENT ACCORDING TO 2022 CBC.

5. DAMPERS:

   A. VOLUME DAMPERS SHALL BE PROVIDED IN EACH BRANCH DUCT TO EACH DIFFUSER AND REGISTER, AND SHALL BE OPPOSED BLADE ADJUSTABLE TYPE.

   B. WHERE THE USE OF BALANCING DAMPERS AT GRILLES, CREATES OBJECTIONABLE NOISE, THE CONTRACTOR SHALL PROVIDE 2" THICK, 6#FIBERGLASS BAFFLES BEHIND THE GRILLES, SLOTTED FOR THE AIR VOLUME REQUIRED.

   C. AS PER SECTION 717.3.2.1 FIRE DAMPER RATINGS, FIRE DAMPERS SHALL HAVE THE MINIMUM FIRE PROTECTION RATING SPECIFIED IN TABLE 717.3.2.1 FOR THE TYPE OF PENETRATION.

TABLE 717.3.2.1

TYPE OF PENETRATION	MINIMUM DAMPER RATING (HOURS)
LESS THAN 3-HOUR FIRE-RESISTANCE-RATED ASSEMBLIES	1.5
3-HOUR OR GREATER FIRE-RESISTANCE-RATED ASSEMBLIES	3

   D. AS PER SECTION 717.3.2.2 SMOKE DAMPER RATINGS. SMOKE DAMPER LEAKAGE RATINGS SHALL BE CLASS I OR II. ELEVATED TEMPERATURE RATINGS SHALL NOT BE LESS THAN 250-DEG FAHRENHEIT (121-DEG CELCIUS).

   E. AS PER SECTION 717.3.2.3 COMBINATION FIRE/SMOKE DAMPER RATINGS, COMBINATION FIRE/SMOKE DAMPERS SHALL HAVE THE MINIMUM FIRE PROTECTION RATING SPECIFIED FOR FIRE DAMPERS IN TABLE 717.3.2.1 FOR THE TYPE OF PENETRATION AND SHALL ALSO HAVE A MINIMUM SMOKE DAMPER RATING AS SPECIFIED IN SECTION 717.3.2.2.

   F. FIRE DAMPERS TO BE DYNAMIC TYPE.

   G. COMBINATION FIRE SMOKE DAMPERS TO BE ACTIVATED USING DUCT SMOKE DETECTORS WITHIN 5'-0" OF THE DAMPERS. AREA SMOKE DETECTOR MAY BE USED IN LIEU OF THE DUCT SMOKE DETECTOR. PROVIDE DUCT SMOKE DETECTOR FOR COMBINATION FIRE SMOKE DAMPERS.

6. PIPING:

   A. PROVIDE HANGERS AND SUPPORTS AS REQUIRED. PLUMBERS TAPE AND WIRE ARE NOT ACCEPTABLE.

   B. CONDENSATE PIPING SHALL BE UNDER THE PLUMBING SECTION OF THE SPECIFICATIONS.

   C. ALL PIPING SHALL BE ACOUSTICALLY VIBRATION ISOLATED FROM THE STRUCTURE USING HUBBARD HOLDRITE SILENCER SERIES FELT 100 OR EQUAL. THE FELT WILL NOT BE CRUSHED. NEOPRENE PADS WILL BE USED AT CLAMP LOCATIONS. THEY SHALL BE EQUAL TO HUBBARD HOLDRITE SILENCER SERIES 276.

7. INSULATION:

   A. INSULATION SHALL BE U.L. LISTED IN COMPLIANCE WITH FLAME-SPREAD RATING AND SMOKE DENSITY REQUIREMENTS OF THE CALIFORNIA BUILDING CODE. INSTALLATION SHALL BE IN ACCORDANCE WITH THE STATE OF CALIFORNIA ENERGY COMMISSION REQUIREMENTS.

   B. INSULATE ALL INTERIOR CONDITIONED SUPPLY & RETURN AIR DUCTWORK WITH 1-1/2" THICK, 75LB. PER CU. FT.
   DENSITY FIBERGLASS INSULATION WITH VAPOR BARRIER (R-8 MINIMUM).

   C. CONDENSATE PIPING SHALL BE INSULATED WITH 1" FOAM PLASTIC AND PAINTED TO MATCH EXISTING WALL OR CEILING.

   D. REFRIGERANT PIPING INSULATION MATERIAL SHALL BE 1-INCH THICKNESS, AND SHALL FURNISH THERMAL RESISTANCE IN THE RANGE OF R-4.0 TO 4.6 PER INCH AT 75 DEGREES F. FOR ANY OTHER VALUE OF R, INSULATION THICKNESS SHALL BE CALCULATED ACCORDINGLY AND SUBMITTED FOR REVIEW. BASIS OF DESIGN WILL BE AP ARMACELL.

   E. EXTERIOR INSULATION EXPOSED TO WEATHER SHALL BE WEATHERPROOFED WITH CHILDERS ALUMINUM JACKETING OR EQUAL. JACKETING SHALL BE FURNISHED WITH AN INTEGRALLY BONDED MOISTURE BARRIER OVER ENTIRE SURFACE IN CONTACT WITH INSULATION. A MINIMUM THICKNESS OF 0.016 ALUMINUM JACKETING IS TO BE PROVIDED ON DUCTS AND PIPING. INSULATED ELBOWS, OF 90 DEGREES AND 45 DEGREES, WITH A NOMINAL IRON PIPE SIZE OF 1/2 INCH TO 8 INCHES SHALL BE PROVIDED WITH CHILDERS ALUMINUM ELL-JACS INSULATION COVERS AS BASIS OF DESIGN, OR PABCO, RPR, OR EQUAL, MANUFACTURED FROM 1100 ALUMINUM ALLOY OF 0.024 INCH THICKNESS.

   F. COVER ALL JOINTS & CRACKS OF PLENUMS LINING WITH 4" STRIPS OF 6 OUNCE FIBERGLASS, ATTACHED WITH ARABOL ADHESIVE.

   G. REFRIGERANT PIPING INSULATION SHALL BE AP ARMAFLEX BLACK S (SELF-SEAL) PIPE INSULATION WITH A NOMINAL WALL THICKNESS OF 1 INCH AS BASIS OF DESIGN OR EQUAL.

   H. FIRE BARRIER DUCT WRAP MUST BE APPROVED FOR FIRE RESISTIVE VENTILATION DUCTS SUCH AS 3M DUCT WRAP 615+ (LARR# 26061-T) OR EQUAL.

8. REFRIGERANT PIPING:

   A. UNLESS OTHERWISE INDICATED, MAIN LIQUID AND SUCTION LINES FROM CONDENSING UNIT TO EVAPORATOR COIL SHALL BE OF SIZES SPECIFIED BY THE MANUFACTURER.

   B. REFRIGERATION PIPING SHALL BE REFRIGERATION GRADE COPPER TUBING, TYPE L HARD-DRAWN. IN INSTANCES WHERE REFRIGERATION LINES ARE INSTALLED IN AN INACCESSIBLE LOCATION AND MUST BE SNAKED THROUGH CONDUIT, THAT PORTION OF TUBING REQUIRED TO COMPLETE CONNECTIONS THROUGH CONDUIT MAY BE SOFT DRAWN. MAINTAIN ENTIRE SYSTEM CLEAN AND DRY DURING INSTALLATION. PIPE SHALL BE SEALED UNTIL INSTALLED.

   C. REFRIGERATION PIPING, BOTH HARD AND SOFT-DRAWN, SHALL BE STRAIGHT AND FREE FROM KINKS, RESTRICTIONS AND HORIZONTAL RUNS SHALL BE SLOPED TOWARDS COMPRESSOR ONE INCH TO 10 FEET WHEREVER POSSIBLE. VAPOR LINE OIL TRAPS SHALL BE INSTALLED ON BOTTOM OF VERTICAL RISERS AND INVERTED OIL TRAP SHALL BE INSTALLED ON TOP OF VERTICAL RISERS.

   D. REFRIGERATION PIPING: JOINTS SHALL BE SILVER BRAZED AND LEAK TESTED. FIELD FABRICATED LINES SHALL BE THOROUGHLY FLUSHED AND CLEANED BEFORE CONNECTION. BLEED NITROGEN THROUGH LINES DURING SILVER BRAZING, AND CAP AND SEAL LINES WHEN NOT COMPLETED AND CONNECTED TO EQUIPMENT.

   E. SLEEVE PENETRATIONS OF FLOORS, WALLS AND CEILING TO ALLOW FOR FREE MOTION OF PIPING. PROVIDE 24 GAGE GALVANIZED IRON PIPE AND CHROME-PLATED ESCUTCHEON PLATES. PACK ANNULAR SPACE BETWEEN PIPE AND SLEEVE WITH INCOMBUSTIBLE MATERIAL SUCH AS FIBERGLASS AND SEAL EACH END WITH MASTIC TO PROVIDE A WATERPROOF SEAL.

   F. PROVIDE HANGERS AND SUPPORTS AS REQUIRED. PLUMBERS TAPE AND WIRE ARE NOT ACCEPTABLE.

   G. CONDENSATE PIPING SHALL BE UNDER THE PLUMBING SECTION OF SPECIFICATIONS.

9. FLASHING:

   A. PROVIDE WATERTIGHT SOLDERED SHEET METAL FLASHING AT ALL NEW & EXISTING WALL AND ROOF OPENINGS.

   B. ALL CONDUIT & PIPES PASSING THRU THE ROOF OPENING SHALL BE FLASHED AND COUNTER FLASHED WITH ACCORDANCE TO ARCHITECTURAL DETAILS.

   C. ALL VOIDS AROUND DUCT PENETRATIONS THRU FLOORS, WALLS & CEILINGS SHALL BE PROPERLY SEALED.

10. FILTERS:

   A. FILTERS SHALL BE U.L. APPROVED AND SHALL HAVE A MINIMUM MERV RATING OF 13 AS TO SATISFY CONDITIONS OF USE PERMIT.

   B. FILTERS SHALL BE PROVIDED WITH AN INTEGRATED PRESSURE DROP SENSOR WIRED TO A WARNING LIGHT ON THE CONTROL PANEL OF THE UNIT THAT SIGNALS WHEN FILTER NEEDS TO BE REPLACED.

   C. CONTRACTOR SHALL PROVIDE AN INITIAL SET OF PRE FILTERS, REPLACE AS REQUIRED DURING CONSTRUCTION, AND SHALL INSTALL ANOTHER SET OF FILTERS AT THE BEGINNING OF TESTING & BALANCING.

11. THE TERMINATION POINT FOR EXHAUST DUCTS DISCHARGING TO ATMOSPHERE SHALL NOT BE LESS THAN THE FOLLOWING:

   A. ENVIRONMENTAL AIR: 3 FT. FROM PROPERTY LINE, 3 FT. FROM BUILDING OPENINGS & 10 FT. FROM A FORCED AIR INLET.

   B. PRODUCT CONVEYING CLASS 1: 30 FT. FROM PROPERTY LINE, 10 FEET FROM BUILDING OPENINGS, 6 FT. FROM EXTERIOR WALL OR ROOF, 30 FT. FROM COMBUSTIBLE WALLS OR OPENINGS INTO THE BUILDING THAT ARE IN THE DIRECTION OF THE EXHAUST DISCHARGE AND 10 FT. ABOVE ADJOINING GRADE.

12. ALL PLUMBING AND APPLIANCE VENTS AND THE DISCHARGE OUTLET OF EXHAUST FANS SHALL BE AT LEAST TEN(10) FEET IN A HORIZONTAL DIRECTION, OR THREE(3) FEET ABOVE THE OUTSIDE AIR INTAKES FOR HVAC UNITS.

13. ELECTRICAL:

   A. FURNISH ALL CONTROLS, SUPPLY INSTRUCTIONS TO THE ELECTRICAL CONTRACTOR FOR MAKING THE LINE & LOW VOLTAGE ELECTRICAL CONNECTIONS, & BE RESPONSIBLE FOR THE OPERATION OF THE EQUIPMENT FURNISHED UNDER THIS SECTION OF THE WORK.

   B. THE ELECTRICAL SECTION WILL FURNISH THE LINE & LOW VOLTAGE ELECTRICAL WORK, HOWEVER, ANY CONTROL WIRING WHICH IS REQUIRED THAT IS NOT SHOWN ON THE CONTROL DIAGRAM SHALL BE PROVIDED UNDER THIS SECTION. IN THE EVENT THAT THE CONTRACTOR CHOOSES TO PROVIDE EQUIPMENT WHICH REQUIRES EXTRA EXPENSE IN THE POWER OR CONTROL WIRING, HE SHALL PAY ALL ELECTRICAL COSTS.

14. ACCESS DOORS: WHERE NECESSARY IN DUCTWORK OR CASINGS, SUITABLE ACCESS DOORS AND FRAMES TO PERMIT INSPECTION, OPERATION AND MAINTENANCE OF ALL CONTROLS MOTOR BEARINGS, OR OTHER APPARATUS CONCEALED BEHIND THE SHEET METAL WORK SHALL BE PROVIDED. ACCESS DOORS IN DUCTS MAY BE OF SINGLE PANEL CONSTRUCTION OF NOT LESS THAN NO. 18 GAUGE, GALVANIZED, AND SHALL HAVE SPONGE RUBBER GASKETS WITH HINGES AND LATCHES.

15. PAINTING: CONTRACTOR SHALL PAINT ALL BLACK STEEL EQUIPMENT SURFACES WHICH ARE NOT FACTORY FINISHED, AS WELL AS ALL OTHER STEEL SURFACES EXPOSED TO THE WEATHER. PAINTING SHALL CONSIST OF ONE COAT OF METAL PRIMER AND ONE FINISH COAT THAT SHALL BE APPROVED BY THE ARCHITECT.

16. FIRE DAMPERS SHALL BE INSTALLED IN DUCTS PASSING THROUGH FIRE WALLS, AND WHERE SHOWN ON DRAWINGS. THEY SHALL COME COMPLETE WITH FUSIBLE LINK, ECCENTRIC WEIGHT, 16GA. SLEEVE AND CLOSING STOP. ACCESS TO FUSIBLE LINKS SHALL BE PROVIDED THROUGH ACCESS DOORS. DAMPERS SHALL BE CONSTRUCTED IN ACCORDANCE WITH NFPA 90A REQUIREMENTS AND SHALL BE APPROVED FOR USE BY THE STATE FIRE MARSHALL. INSTALL FIRE DAMPERS & SMOKE FIRE DAMPERS IN SUCH A MANNER AS TO BE READILY ACCESSIBLE FOR MAINTENANCE & REPAIRS.

17. MEP COMPONENT ANCHORAGE NOTE

ALL MECHANICAL, PLUMBING, AND ELECTRICAL COMPONENTS SHALL BE ANCHORED AND INSTALLED PER THE DETAILS ON THE DSA-APPROVED CONSTRUCTION DOCUMENTS. THE FOLLOWING COMPONENTS SHALL BE ANCHORED OR BRACED TO MEET THE FORCE AND DISPLACEMENT REQUIREMENTS PRESCRIBED IN THE 2022 CBC SECTIONS 1617A.1.18 THROUGH 1617A.1.26 AND ASCE 7-16 CHAPTERS 13,26, AND 30:

   A. ALL PERMANENT EQUIPMENT AND COMPONENTS.

   B. TEMPORARY, MOVABLE OR MOBILE EQUIPMENT THAT IS PERMANENTLY ATTACHED (E.G. HARD WIRED) TO THE BUILDING UTILITY SERVICES SUCH AS ELECTRICITY, GAS OR WATER. "PERMANENTLY ATTACHED" SHALL INCLUDE ALL ELECTRICAL CONNECTIONS EXCEPT PLUGS FOR 110/220 VOLT RECEPTACLES HAVING FLEXIBLE CABLE.

   C. TEMPORARY, MOVABLE OR MOBILE EQUIPMENT WHICH IS HEAVIER THAN 400 POUNDS OR HAS A CENTER OF MASS LOCATED 4 FEET OR MORE ABOVE THE ADJACENT FLOOR OR ROOF LEVEL THAT DIRECTLY SUPPORT THE COMPONENT IS REQUIRED TO BE RESTRAINED IN A MANNER APPROVED BY DSA.

THE FOLLOWING MECHANICAL AND ELECTRICAL COMPONENTS SHALL BE POSITIVELY ATTACHED TO THE STRUCTURE BUT NEED NOT DEMONSTRATE DESIGN COMPLIANCE WITH THE REFERENCES NOTED ABOVE. THESE COMPONENTS SHALL HAVE FLEXIBLE CONNECTIONS PROVIDED BETWEEN THE COMPONENT AND ASSOCIATED DUCTWORK, PIPING, AND CONDUIT. FLEXIBLE CONNECTIONS MUST ALLOW MOVEMENT IN BOTH TRANSVERSE AND LONGITUDINAL DIRECTIONS:

   A. COMPONENTS WEIGHING LESS THAN 400 POUNDS AND HAVING A CENTER MASS LOCATED 4 FEET OR LESS ABOVE THE ADJACENT FLOOR OR ROOF LEVEL THAT DIRECTLY SUPPORT THE COMPONENT.

   B. COMPONENTS WEIGHING LESS THAN 20 POUNDS, OR IN THE CASED OF DISTRIBUTED SYSTEMS, LESS THAN 5 POUNDS PER FOOT, WHICH ARE SUSPENDED FROM A ROOF OR FLOOR OR HUNG FROM A WALL.

THE ANCHORAGE OF ALL MECHANICAL , ELECTRICAL AND PLUMBING COMPONENTS SHALL BE SUBJECT TO THE APPROVAL OF THE DESIGN PROFESSIONAL IN GENERAL RESPONSIBLE CHARGE OR STRUCTURAL ENGINEER DELEGATED RESPONSIBILITY AND ACCEPTANCE BY DSA. THE PROJECT INSPECTOR WILL VERIFY THAT ALL COMPONENTS AND EQUIPMENT HAVE BEEN ANCHORED IN ACCORDANCE WITH THE ABOVE REQUIREMENTS.

PIPING, DUCTWORK, AND ELECTRICAL DISTRIBUTION SYSTEMS SHALL BE BRACED TO COMPLY WITH THE FORCES AND DISPLACEMENTS PRESCRIBED IN ASCE 7-16 SECTION 13.3 AS DEFINED IN ASCE 7-16 SECTIONS 13.6.5, 13.6.6, 13.6.7, 13.6.8; AND 2019 CBC, SECTIONS 1617A.1.24, 1617A.1.25 AND 1617A.1.26.

THE METHOD OF SHOWING BRACING AND ATTACHMENTS TO THE STRUCTURE FOR THE IDENTIFIED DISTRIBUTION SYSTEM ARE AS NOTED BLOW. WHEN BRACING AND ATTACHMENTS ARE BASED ON A PREAPPROVED INSTALLATION GUIDE (E.G., HCAI OPM FOR 2013 CBC OR LATER), COPIES OF THE BRACING SYSTEM INSTALLATION GUIDE OR MANUAL SHALL BE AVAILABLE ON THE JOBSITE PRIOR TO THE START OF AND DURING THE HANGING AND BRACING OF THE DISTRIBUTION SYSTEMS. THE STRUCTURAL ENGINEER OF RECORD SHALL VERIFY THE ADEQUACY OF THE STRUCTURE TO SUPPORT THE HANGER AND BRACE LOADS.

MECHANICAL PIPING (MP), MECHANICAL DUCTS (MD), PLUMBING PIPING (PP), ELECTRICAL DISTRIBUTION SYSTEMS (E):

MP_ MD√ PP_ E_ OPTION 1: DETAILED ON THE APPROVED DRAWINGS WITH THE PROJECT SPECIFIC NOTED AND DETAILS.

18. FINAL LOCATION OF CEILING DIFFUSERS SHALL BE PER THE REFLECTED CEILING PLAN OR AS PER FIELD REQUIREMENTS.

19. A MINIMUM OF 30" CLEAR WORKING SPACE IN FRONT OF ACCESS PANELS TO THE COMPRESSOR, BLOWER ASSEMBLY AND AIR FILTER SECTION SHALL BE PROVIDED.

20. OPENINGS: FURNISH INFORMATION TO THE OTHER TRADES ON SIZE AND LOCATION OF OPENINGS WHICH ARE REQUIRED IN WALLS, SLABS, ETC. FOR PIPING, DUCTS & EQUIPMENT. ANY ADDITIONAL OPENINGS OR CHANGES TO THE EXISTING ONES SHALL BE PROVIDED AS ACCEPTABLE TO THE ENGINEER, AT NO ADDITIONAL COST TO THE OWNER.

21. ACOUSTICAL NOTES:

   A. APARTMENT FCU VIBRATION ISOLATION SHOULD BE USING A MASON INDUSTRY TYPE HMIB GROMMET.

   B. ROOFTOP CONDENSING UNITS

      1. ISOLATOR SHALL BE 2 INCH DEFLECTION STEEL SPRING EQUAL TO MASON SSLFH AND THE CEILING IN THE UNIT SHALL INCLUDE RESILIENT CHANNEL.

   C. FLEXIBLE CONNECTIONS SHOULD BE USED AT ALL CONNECTIONS TO MECHANICAL EQUIPMENT.

   D. TOILET EXHAUST FANS' MAXIMUM SONE LEVEL OF 1.5 SONES.

22. OUTDOOR AIR SUPPLY AND EXHAUST EQUIPMENT SHALL BE INSTALLED WITH DAMPERS THAT AUTOMATICALLY CLOSE UPON FAN SHUTDOWN, PER ENERGY CODE 120.2(F), UNLESS IT COMPLIES WITH AN EXCEPTION.

MECHANICAL SYMBOLS LEGEND

SYMBOL	ABBR	DESCRIPTION
12"x6" 12"x6"		NEW DUCTWORK - FIRST FIGURE: SIDE SHOWN SECOND FIGURE: SIDE NOT SHOWN
	(N)	NEW DUCTWORK WITH EXTERNAL INSULATION
	(L)	DUCTWORK WITH INTERNAL ACOUSTICAL LINING
		FLEX CONNECTION IN DUCT
		DUCT SIZE TRANSITION
		ROUND VERTICAL RISE OR DROP
		RECTANGULAR VERTICAL RISE OR DROP
		VERTICAL TAKE OFF UP
		VERTICAL TAKE OFF DOWN
		ROUND DUCT 90 DEGREE RADIUS ELBOW
		ROUND DUCT CONICAL 90 DEGREE TAKE OFF
		RECTANGULAR DUCT 90 DEGREE MITERED ELBOW WITH EXTRACTION DAMPER
		RECTANGULAR DUCT ANGLE TAKE OFF
CSFD CSFD	FD, CSFD	(FD) DYNAMIC FIRE DAMPER / (CSFD)COMBINATION SMOKE AND FIRE DAMPER-WITH ACCESS DOOR & CEILING ACCESS
	MD	MANUAL VOLUME DAMPER
		DUCT UNDER POSITIVE PRESSURE (SUPPLY AIR OR FAN DISCHARGE)
		DUCT UNDER NEGATIVE PRESSURE (RETURN, EXHAUST)
S-1 / 100		RECTANGULAR CEILING DIFFUSER (TYPE S-1, 100 CFM) SUPPLY AIR
S-1 / 100		SIDEWALL DIFFUSER (TYPE S-1, 100 CFM) SUPPLY AIR
R-1 / 100 E-1 / 100		CEILING REGISTER/GRILLE (TYPE E-1, 100 CFM RETURN AIR OR EXHAUST AIR)
R-1 / 100		SIDEWALL REGISTER/GRILLE (TYPE R-1, 100 CFM RETURN AIR OR EXHAUST AIR)
	U/C	UNDERCUT DOOR
T	T	TOP OF THERMOSTAT MOUNTED AT 48" A.F.F.
FC 1		EQUIPMENT IDENTIFICATION
		STACK, VENT OR ROUND DUCT RISER

MECHANICAL SHEET INDEX

SHEET NO.	SHEET TITLE	CURRENT ISSUE
M-0.1	MECHANICAL GENERAL NOTES, SYMBOLS LEGEND & SHEET INDEX	100% DD
M-0.2	MECHANICAL SCHEDULES	100% DD
M-1.0	MECHANICAL SITE PLAN	100% DD
M-2.1	MECHANICAL FIRST FLOOR PLAN	100% DD
M-2.2	MECHANICAL SECOND FLOOR PLAN	100% DD
M-2.3	MECHANICAL ROOF PLAN	100% DD
M-2.4	MECHANICAL POOL HOUSE FLOOR PLAN	100% DD
M-5.1	MECHANICAL DETAILS	100% DD

MECHANICAL GENERAL NOTES, SYMBOLS LEGEND & SHEET INDEX

DATE PLOTTED: 5/17/2024 4:43 PM
ORIGINAL SIZE: ARCH FULL BLEED E1 (30.00 X 42.00 INCHES)
BY: KENNY GANATE LORENZO
PLOT SCALE: 1:1
LAST SAVED: KLORENZO
PLOT STYLE: BREEN DESIGN GROUP.STB
FILE NAME: H:\PROJECTS\138 CORP FOR BETTER HOUSING\24-001 - FRESNO SENIOR CENTER\01 - CAD\SENIOR CENTER MECHANICAL\M-0.1 MECHANICAL GENERAL NOTES, SYMBOLS LEGEND & SHEET INDEX.DWG

Y&M Architects
Y&M Architects
255 South Santa Fe Avenue, Suite 103
Los Angeles, CA 90012
Telephone: 213 623 2107
www.ymarch.com

DRAWN BY	KLORENZO
DESIGNED BY	ECRISTOBAL
CHECKED BY	RJOHNSON
APPROVED BY	RJOHNSON

BREEN DESIGN GROUP
3825 DEL AMO BOULEVARD
TORRANCE, CA 90503
PH: 310 464 8404
WWW.BREENDESIGN.COM

REGISTERED PROFESSIONAL ENGINEER
JOPER O. LOPEZ
NO. M-35317
EXP. 06/30/2025

COPYRIGHT ©2024 BREEN DESIGN GROUP

FRESNO SENIOR CENTER

Integrated Community Development

Project. *	Developer. 20750 Ventura Boulevard, Suite 155 Woodland Hills, CA 91364	Project No.: 138-24-001	Scale: NONE	Date 06.11.24	Page M-0.1

PACKAGED ROOFTOP HEAT PUMP UNIT SCHEDULE

MARK	QTY.	MAKE	MODEL	TONS	EVAPORATOR FAN			COOLING					HEATING			ELECTRICAL					SERVICE	OPERATING WEIGHT (LBS.)	REMARKS
					SUPPLY AIR (CFM)	EXT. SP. (IN. WC)	MAX. BHP	TOTAL CAPACITY (BTUH)	SENSIBLE CAPACITY (BTUH)	EFFICIENCY			@ 47° DEG. F	HSPF	@ 17 DEG. F	V	PH	HZ	MCA	MOCP			
										SEER	EER	IEER											
RTU-1	1	CARRIER	50FCQM17	15.0 TONS	6300	0.8	2.4	172,000	-	-	10.6	14.0	168,000	-	106,000	208/230	3	60	72	-	1/F (COMMERCIAL KITCHEN)	1627	PROVIDE ROOF CURB WITH PERIMETER SPRING ISOLATOR AND ECONOMIZER.
RTU-2	4	CARRIER	50FCQM12	10.0 TONS	4000	0.25	2.4	118,000	120,000	-	11.0	15.0	115,000	-	66,000	208/230	3	60	60	70	1/F (MULTI-USE AREA / LIBRARY, COMMON AREA, CAFETERIA ROOM), 2/F (COMMON OPEN AREA 1)	955	PROVIDE ROOF CURB WITH PERIMETER SPRING ISOLATOR AND ECONOMIZER.
RTU-3	4	CARRIER	50VT-K24---3	2 TONS	750	0.5	0.12	23,000	-	14.5	12.0	-	22,600	8.0	12,000	208/230	1	60	21.3	30	1/F (HALLWAY, MEN'S LOCKER ROOM / WOMEN'S LOCKER ROOM), 2/F (COMPUTER ROOM, MULTI-USE ROOM N0.3)	365	PROVIDE ROOF CURB WITH PERIMETER SPRING ISOLATOR AND ECONOMIZER.
RTU-4	1	CARRIER	50FCQM08	7.5 TONS	3000	0.25	2.4	86,000	90,000	-	11.2	15.0	83,000	-	48,000	208/230	3	60	45	60	2/F (COMMON OPEN AREA 2)	805	PROVIDE ROOF CURB WITH PERIMETER SPRING ISOLATOR AND ECONOMIZER.
RTU-5	1	CARRIER	50FCQA06	5 TONS	2500	0.25	1.06	60,500	60,000	14.3	11.8	15.0	56,500	8.2	30,000	208/230	3	60	31	45	2/F (ART ROOM)	584	PROVIDE ROOF CURB WITH PERIMETER SPRING ISOLATOR AND ECONOMIZER.
RTU-6	2	CARRIER	50FCQA05	4 TONS	2000	0.25	0.72	49,500	48,000	14.3	11.8	15.0	46,000	8.2	23,600	208/230	3	60	26	30	1/F (AEROBICS & GYM)	473	PROVIDE ROOF CURB WITH PERIMETER SPRING ISOLATOR AND ECONOMIZER.
RTU-7	3	CARRIER	50FCQA04	3 TONS	1500	0.25	0.44	36,200	36,000	14.3	11.8	15.0	34,000	8.2	17,000	208/230	3	60	27	30	2/F (MULTI-USE ROOM N0.1, MULTI-USE ROOM N0.2, GAME ROOM)	467	PROVIDE ROOF CURB WITH PERIMETER SPRING ISOLATOR AND ECONOMIZER.

VRF SYSTEM-INDOOR UNIT SCHEDULE

MARK	QTY.	MAKE	MODEL	COOLING CAPACITY		HEATING CAPACITY BTUH	BLOWER			ELECTRICAL DATA				SERVICE	WEIGHT (LBS)	REMARKS
				NOMINAL BTUH	SENSIBLE BTUH		CFM	ESP. (IN. WC)	POWER	VOLT	PH	MCA	MOCP			
FC-1	2	SAMSUNG	AM005TNVDCH/AA	5,000	3,400	5,800	173	-	27 W	208/230	1	0.16	15.0	1/F (OFFICE SPACE A-121 & A-122)	19.8	PROVIDE VIBRATION SPRING ISOLATOR HANGER, CONDENSATE OVERFLOW SWITCH AND PROGRAMMABLE THERMOSTAT. DISCONNECT SWITCH BY ELECTRICAL CONTRACTOR. SEE PLUMBING DRAWINGS FOR PRIMARY CONDENSATE PIPING. PROVIDE WITH 2" MERV 13 FILTER BOX ON RETURN AIR PLENUM.
FC-2	1	SAMSUNG	AM012TNVDCH/AA	12,000	8,300	13,500	335	-	27 W	208/230	1	0.31	15.0	1/F (BREAK ROOM)	20.9	
FC-3	1	SAMSUNG	AM005NNNDCH/AA	5,000	3,300	6,000	300	-	65 W	208/230	1	0.24	15.0	1/F (OFFICE SPACE HALLWAY)	25.79	
FC-4	2	SAMSUNG	AM018NNNDCH/AA	18,000	13,500	20,000	450	-	65 W	208/230	1	0.38	15.0	1/F (CONFERENCE ROOM & MEETING ROOM)	26.46	

VRF SYSTEM-OUTDOOR UNIT SCHEDULE

MARK	QTY.	MAKE	MODEL	NOMINAL CAPACITY				ELECTRICAL DATA				MAXIMUM REFRIGERANT LINES LENGTHS		WEIGHT (LBS)	VIBRATION ISOLATORS	FAN COIL UNIT	REMARKS
				COOLING BTUH	HEATING BTUH	HSPF	IEER/EER	V	PH	MCA	MOCP	TOTAL PIPE LENGTH (FT)	VERTICAL LIFT (FT)				
CU-1	1	SAMSUNG	AM072BXVGFH/AA	72,000	81,000	-	28.8/12.2	208/230	1	28.0	50.0	3,280	164.0	383.6	SPRING ISOLATOR	FC-1, FC-2, FC-3	PROVIDE SPRING ISOLATORS AND REFRIGERANT PORT LOCKING CAP. DISCONNECT SWITCH BY ELECTRICAL CONTRACTOR.

SPLIT SYSTEM INDOOR UNIT SCHEDULE

MARK	QTY.	MAKE	MODEL	COOLING CAPACITY		HEATING CAPACITY BTUH	BLOWER			ELECTRICAL DATA				SERVICE	WEIGHT (LBS)	REMARKS
				NOMINAL BTUH	SENSIBLE BTUH		CFM	ESP. (IN. WC)	POWER	VOLT	PH	MCA	MOCP			
FC-5	4	SAMSUNG	AR09TSFABWKNCV	9,000	-	11,000	250	-	-	208/230	1	12	-	ELEVATOR MACHINE ROOM, ELEC ROOM A-115 & A-209, TV/ TELEPHONE ALARM ROOM	23.4	PROVIDE CONDENSATE PUMP WITH OVERFLOW SWITCH AND TITLE 24 COMPLIANT PROGRAMMABLE THERMOSTAT. SEE PLUMBING DRAWINGS FOR PRIMARY CONDENSATE PIPING. DISCONNECT SWITCH BY ELECTRICAL CONTRACTOR. INDOOR UNIT POWERED BY OUTDOOR UNIT. FOR ELEVATOR MACHINE ROOM, SET THERMOSTAT TO COOLING MODE ONLY.

SPLIT SYSTEM OUTDOOR UNIT SCHEDULE

MARK	QTY.	MAKE	MODEL	NOMINAL CAPACITY				ELECTRICAL DATA				MAXIMUM REFRIGERANT LINES LENGTHS		WEIGHT (LBS)	VIBRATION ISOLATORS	FAN COIL UNIT	REMARKS
				COOLING BTUH	HEATING BTUH	HSPF	SEER/EER	V	PH	MCA	MOCP	TOTAL PIPE LENGTH (FT)	VERTICAL LIFT (FT)				
CU-2	4	SAMSUNG	AR09TSFACWKXCV	9,000	11,000	12.5	24.5/15.5	208/230	1	-	-	66.0	49.0	70.8	VIBRATION SPRING ISOLATORS	FC-5	PROVIDE VIBRATION SPRING ISOLATOR AND REFRIGERANT PORT LOCKING CAP. DISCONNECT SWITCH BY ELECTRICAL CONTRACTOR. REFRIGERANT PIPING SIZING AND OTHER CONSIDERATIONS SHALL BE PER MANUFACTURER'S RECOMMENDATION.

MAKE UP AIR SCHEDULE

MARK	QTY.	MAKE	MODEL	TOTAL CFM	FAN TYPE	ESP (IN)	MAX. RPM	MOTOR DATA				PUMP DATA (MODEL: EP200)					SERVICE	WEIGHT (LBS)	REMARKS
								HP	AMPS	V	PH	V	PH	AMPS	WATTS	GPM @ 5' HEAD			
MUA-1	1	ARCTIC CIRCLE	ED830	2,640	DIRECT DRIVE	0.8	487	3/4 HP	13.8	115	1	120	1	0.8	44	2.45	COMMERCIAL KITCHEN MAKE UP AIR	285	-

DUCT FURNACE SCHEDULE

MARK	QTY.	MAKE	MODEL	TOTAL CFM	EXT. SP. (IN. WC)	ΔT	TOTAL CAPACITY (BTUH)	SERVICE	WEIGHT (LBS)	REMARKS
DF-1	1	REZNOR	HRP-TSL(10-23)REV-A	2,640	0.38	35.6°F	125,000	COMMERCIAL KITCHEN MAKE UP AIR	201.0	-

FAN SCHEDULE

MARK	QTY.	MAKE	MODEL	TOTAL CFM	FAN TYPE	ESP (IN)	MAX. RPM	MOTOR DATA				SERVICE	WEIGHT (LBS)	REMARKS
								HP	AMPS	V	PH			
EF-1	5	GREENHECK	SQ-70-VG	150	DIRECT DRIVE	0.25	1,443	1/15 HP	-	115	1	MEN'S PUBLIC RESTROOM A-205, WOMEN'S PUBLIC RESTROOM A-204, RESTROOM (A-104,A-105), STORAGE ROOM A-208,JANITOR CLOSET A-131	30.0	DISCONNECT SWITCH BY ELECTRICAL CONTRACTOR. INTERLOCK WITH LIGHTSWITCH. PROVIDE BACKDRAFT DAMPER.
EF-2	1	GREENHECK	USF-15-B7	1200	DIRECT DRIVE	0.5	903	1/3 HP	-	115	1	WOMEN'S PUBLIC BATHROOM A-212, MEN'S PUBLIC BATHROOM A-213	47.0	DISCONNECT SWITCH BY ELECTRICAL CONTRACTOR. INTERLOCK WITH LIGHTSWITCH. PROVIDE BACKDRAFT DAMPER.
EF-3	1	GREENHECK	SQ-99-VG	700	DIRECT DRIVE	0.5	1,576	1/4 HP	-	115	1	1/F (WOMEN'S LOCKER ROOM & MEN'S LOCKER ROOM)	48.0	DISCONNECT SWITCH BY ELECTRICAL CONTRACTOR. INTERLOCK WITH LIGHTSWITCH. PROVIDE BACKDRAFT DAMPER.
EF-4	1	LORENCOOK	120R13D	1,000	DIRECT DRIVE	0.25	1,300	1/4 HP	-	115	1	COMMERCIAL KITCHEN	67.0	-
SF-1	1	GREENHECK	USF-12-B7	850	DIRECT DRIVE	0.5	1,395	1/3 HP	-	115	1	1/F OFFICES, WOMEN'S/MEN'S PUBLIC BATHROOM (A-212, A-213)	57.0	DISCONNECT SWITCH BY ELECTRICAL CONTRACTOR. FAN TO RUN CONTINUOUSLY. PROVIDE 2" MERV 13 FILTER.
KEF-1	1	SUPREME	GBC-222	3300	DIRECT DRIVE	1.00	971	1 1/2 HP	-	115	1	COMMERCIAL KITCHEN	420.0	-

AIR DISTRIBUTION SCHEDULE

MARK	QTY.	MAKE	MODEL	CFM	STYLE	USE	SIZE (IN)	MAX PD (IN)	MAX NC	REMARKS
S-1	77	PRICE	AMCD	0-1500	ALUMINUM MODULAR CORE DIFFUSER	SA	24" X 24"	0.056	23	NECK SIZE PER PLAN. PROVIDE O.B.D.
S-2	7	PRICE	AMCD	0-100	ALUMINUM MODULAR CORE DIFFUSER	SA	12" X 12"	0.009	15	
R-1	21	PRICE	10	0-2000	PERFORATED RETURN GRILLE	RA	24" X 24"	0.171	25	
R-2	1	PRICE	10	2001-3600	PERFORATED RETURN GRILLE	RA	48" X 20"	0.171	25	
E-1	21	PRICE	80	0-210	EGG CRATE	EA	12" X 12"	0.013	15	
OA-1	8	PRICE	620	0-150	LOUVERED SUPPLY GRILLE	OA	12" X 12"	0.008	15	

DATE PLOTTED: 5/17/2022 4:43 PM
ORIGINAL SIZE: ARCH FULL BLEED E1 (30.00 X 42.00 INCHES)
BY: KENNY GINATE LORENZO
PLOT SCALE: 1:1
LAST SAVED: KLORENZO
PLOT STYLE: BREEN DESIGN GROUP.STB
FILE NAME: H:\PROJECTS\138 CCRP FOR BETTER HOUSING\24-001 - FRESNO SENIOR CENTER\01 - CAD\SENIOR CENTER PACKAGE\MECHANICAL\M-0.2 MECHANICAL SCHEDULES.DWG

MECHANICAL SCHEDULES

Y&M Architects

Y&M Architects
255 South Santa Fe Avenue, Suite 103
Los Angeles, CA 90012
Telephone: 213 623 2107
www.ymarch.com

DRAWN BY	KLORENZO
DESIGNED BY	ECRISTOBAL
CHECKED BY	RJOHNSON
APPROVED BY	RJOHNSON

BREEN DESIGN GROUP
3825 DEL AMO BOULEVARD
TORRANCE, CA 90503
PH: 310 464 8404
WWW.BREENDESIGN.COM

REGISTERED PROFESSIONAL ENGINEER
JOFER O. LOPEZ
NO. M-35317
EXP. 06/30/2025

Integrated Community Development

FRESNO SENIOR CENTER

Project. *

Developer. 20750 Ventura Boulevard, Suite 155
Woodland Hills, CA 91364

Project No.: 138-24-001 Scale: NONE Date 06.11.24 Page M-0.2

COPYRIGHT ©2024 BREEN DESIGN GROUP

MINIMUM VENTILATION RATES CALCULATIONS FOR NON-RESIDENTIAL SPACES

REQUIRED VENTILATION RATE (2022 CMC SEC. 403.2.1. : TABLE 402.1) USING AREA METHOD VBZ = (RP X PZ) + (RA X AZ)							REQUIRED VENTILATION RATE (2022 BUILDING ENERGY EFFICIENCY STANDARDS: TABLE 120.1-A) USING EQUATION 120.1-F, VZ = RA X AZ			[1]ACTUAL CFM
ROOM NAME	FLOOR	RP (CFM/OCC.)	OCC./1000FT^2 (PZ)	RA (CFM/FT^2)	AZ (FT^2)	MIN. CFM (VBZ)	RA (CFM/FT^2)	AZ (FT^2)	MIN. CFM (VZ)	
LOBBY	1/F	5	30	0.06	592	124.3	0.50	592.0	296.0	300
COMMON AREA	1/F	5	20	0.06	1941	310.6	0.50	1941.0	970.5	980
MULTI-USE AREA / LIBRARY	1/F	5	120	0.06	1682	1110.1	0.50	1682.0	841.0	1120
GYM	1/F	20	10	0.06	1015	263.9	0.15	1015.0	152.3	300
AEROBICS ROOM	1/F	20	10	0.06	1322	343.7	0.15	1322.0	198.3	350
ELECTRICAL ROOM A-115	1/F	5	2	0.06	217	15.2	0.15	217.0	32.6	30
CAFETERIA ROOM	1/F	7.5	70	0.18	2026	1428.3	0.50	2026.0	1013.0	1430
TV/ TELEPHONE ALARM ROOM	1/F	5	2	0.06	160	11.2	0.15	160.0	24.0	30
COMMERCIAL KITCHEN	1/F	5	50	0.06	937	290.5	0.15	937.0	140.6	300
STAFF BREAK ROOM	1/F	5	25	0.06	176	32.6	0.50	176.0	88.0	90
CONFERENCE ROOM	1/F	5	50	0.06	305	94.6	0.50	305.0	152.5	140
MEETING ROOM	1/F	5	50	0.06	282	87.4	0.50	282.0	141.0	150
OFFICE A-121	1/F	5	5	0.06	80	6.8	0.15	80.0	12.0	30
OFFICE A-122	1/F	5	5	0.06	80	6.8	0.15	80.0	12.0	30
MULTI-USE ROOM (A-211)	2/F	5	50	0.06	1470	455.7	0.50	1470.0	735.0	750
ART ROOM	2/F	10	20	0.18	1560	592.8	0.15	1560.0	234.0	600
COMMON OPEN AREA	2/F	7.5	30	0.06	2370	675.5	0.50	2370.0	1185.0	1200
GAME ROOM	2/F	7.5	20	0.18	1276	421.1	0.15	1276.0	191.4	430
ELECTRICAL ROOM A-209	2/F	5	2	0.06	145	10.2	0.15	145.0	21.8	30
STORAGE ROOM A-208	2/F	5	2	0.06	352	24.6	0.15	352.0	52.8	100
STORAGE ROOM A-215	2/F	5	2	0.06	235	16.5	0.15	235.0	35.3	50
MULTI-USE ROOM (A-206)	2/F	5	50	0.06	496	153.8	0.50	496.0	248.0	250
COMPUTER ROOM	2/F	10	25	0.12	456	168.7	0.15	456.0	68.4	180
MULTI-USE ROOM (A-202)	2/F	5	10	0.12	724	123.1	0.50	724.0	362.0	370

1. ACTUAL CFM IS BASED ON WHICHEVER IS LARGER BETWEEN VBZ AND VZ.

CORRIDOR VENTILATION AIR CALCULATION REQUIREMENTS

PER CMC-403.0 SUPPLY THE MINIMUM OUTSIDE AIR RATE DETERMINED IN ACCORDANCE WITH TABLE 403.3 BASED ON THE OCCUPANCY OF THE SPACE.

SPACE	CORRIDOR	
OCCUPANCY CLASSIFICATION	1/F HALLWAY	2/F CORRIDOR
FLOOR AREA [SQ.FT]	1545.4	2258.3
FLOOR LEVEL	1/F	2/F
OUTDOOR AIR [CFM/PERSON] UNLESS NOTED	0.15 CFM/SQ.FT	
REQUIRED TOTAL OUTSIDE AIR [CFM]	231.8	338.7
TOTAL OUTSIDE AIR SUPPLIED PER FLOOR [CFM]	250	350
THEREFORE TOTAL SUPPLIED OUTSIDE AIR MEET MINIMUM REQUIREMENTS		

DATE PLOTTED: 5/17/2022 4:43 PM BY: KENNY GANATE LORENZO LAST SAVED: KLORENZO FILE NAME: H:\PROJECTS\138 CCRP FOR BETTER HOUSING\24-001 - FRESNO SENIOR CENTER\01 - CAD\SENIOR CENTER PACKAGE\MECHANICAL\M-0.3 MECHANICAL CALCULATIONS.DWG
ORIGINAL SIZE: ARCH FULL BLEED E1 (30.00 X 42.00 INCHES) PLOT SCALE: 1:1 PLOT STYLE: BREEN DESIGN GROUP.STB

Y&M Architects
Y&M Architects
255 South Santa Fe Avenue, Suite 103
Los Angeles, CA 90012
Telephone: 213 623 2107
www.ymarch.com

DRAWN BY	KLORENZO
DESIGNED BY	ECRISTOBAL
CHECKED BY	RJOHNSON
APPROVED BY	RJOHNSON

BREEN DESIGN GROUP
3825 DEL AMO BOULEVARD
TORRANCE, CA 90503
PH: 310 464 8404
WWW.BREENDESIGN.COM

REGISTERED PROFESSIONAL ENGINEER JOPER O. TUPAS NO. M-35317 EXP. 06/30/2025

MECHANICAL CALCULATIONS

Integrated Community Development

FRESNO SENIOR CENTER

Project. *

Developer. 20750 Ventura Boulevard, Suite 155
Woodland Hills, CA 91364

Project No.: 138-24-001 Scale: NONE Date 06.11.24 Page M-0.3

COPYRIGHT ©2024 BREEN DESIGN GROUP

GENERAL NOTES

1 -

REFERENCE NOTES

1 -

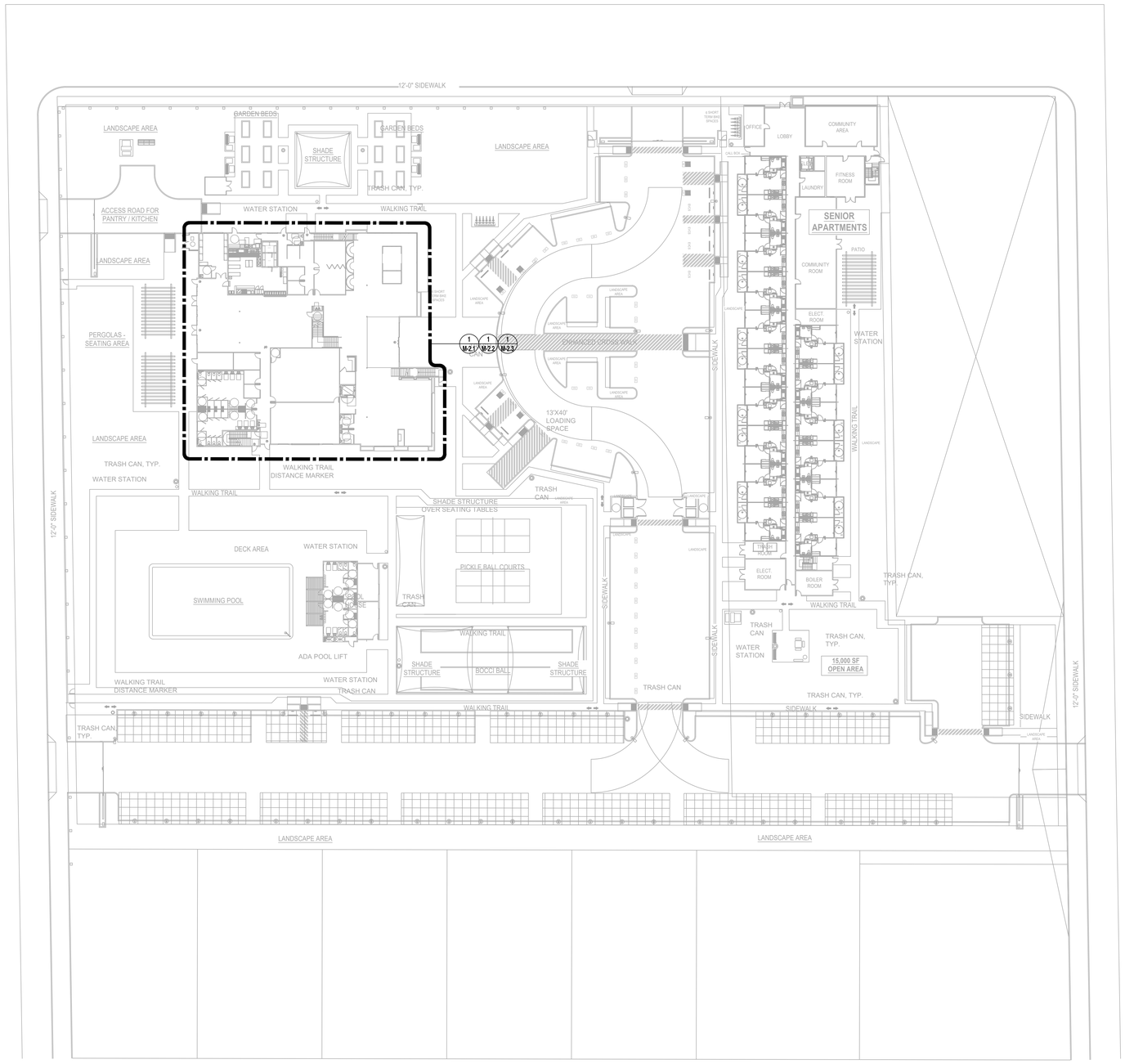

N

MECHANICAL SITE PLAN

Y&M Architects

Y&M Architects
255 South Santa Fe Avenue, Suite 103
Los Angeles, CA 90012
Telephone: 213 623 2107
www.ymarch.com

DRAWN BY	CCALBONERA
DESIGNED BY	ECRISTOBAL
CHECKED BY	RJOHNSON
APPROVED BY	RJOHNSON

BREEN DESIGN GROUP

3825 DEL AMO BOULEVARD
TORRANCE, CA 90503
PH: 310 464 8404
WWW.BREENDESIGN.COM

REGISTERED PROFESSIONAL ENGINEER
JOPER O. TUPAS
NO. M-35317
EXP. 06/30/2025

FRESNO SENIOR CENTER

Integrated Community Development

06.11.24 M-1.0

Project. * | Developer. 20750 Ventura Boulevard, Suite 155 Woodland Hills, CA 91364 | Project No.: 138-24-001 | Scale: 1" = 30' | Date | Page

COPYRIGHT ©2024 BREEN DESIGN GROUP

DATE PLOTTED: 5/17/2022 4:43 PM
ORIGINAL SIZE: ARCH FULL BLEED E1 (30.00 X 42.00 INCHES)
BY: KENNY GANATE LORENZO
PLOT SCALE: 1:1
LAST SAVED: CCALBONERA
PLOT STYLE: BREEN DESIGN GROUP.STB
FILE NAME: H:\PROJECTS\138 CORP FOR BETTER HOUSING\24-001 - FRESNO SENIOR CENTER\01 - CAD\SENIOR CENTER PACKAGE\MECHANICAL\M-1.0 MECHANICAL SITE PLAN.DWG

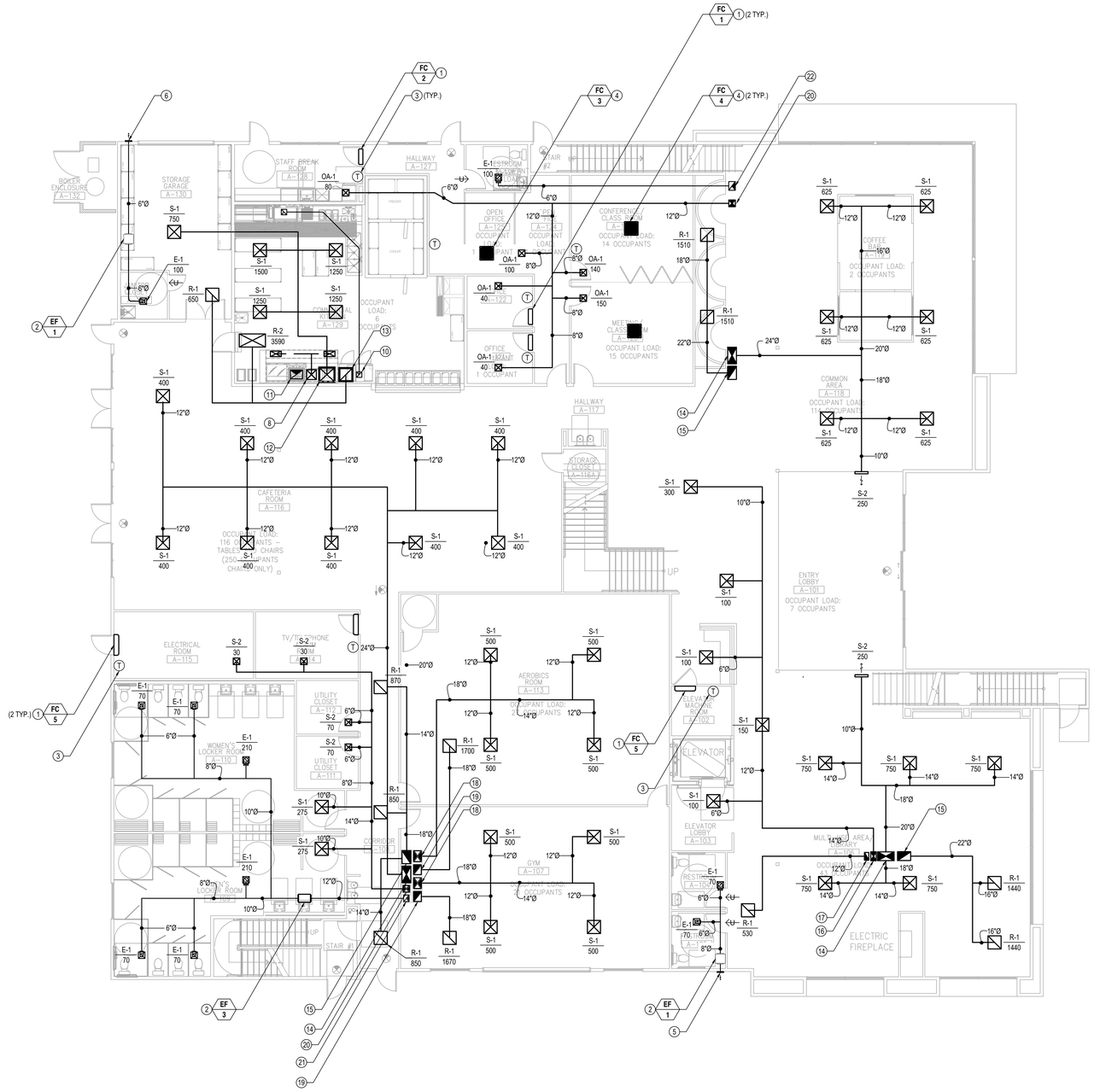

GENERAL NOTES

1. ALL EXHAUST OUTLET TERMINATIONS SHALL NOT BE LESS THAN 3 FEET FROM PROPERTY LINE OR CENTER LINE OF A PUBLIC ALLEY OR STREET, 3 FEET FROM THE EXTERIOR WALL OR ROOF. IT SHALL BE ATLEAST 3 FEET MIN. FROM BUILDING OPENINGS AND 10 FEET ABOVE ADJOINING GRADE.
2. PROVIDE VOLUME DAMPERS TO EACH DIFFUSER, REGISTER AND GRILLE (AIR DEVICES). DAMPERS SHALL BE OPPOSED BLADE ADJUSTABLE TYPE. ALL VOLUME DAMPERS SHALL BE ACCESSIBLE.
3. PROVIDE SHUTDOWN OF HVAC SYSTEM SERVING SMOKE DAMPERS OR COMBINATION SMOKE-FIRE DAMPERS WHEN AUTOMATIC ACTIVATION OF DAMPER OCCURS.

REFERENCE NOTES

1. WALL MOUNTED FAN COIL UNIT.
2. CEILING MOUNTED INLINE EXHAUST/MAKE-UP AIR FAN.
3. INSTALL THERMOSTAT 48" A.F.F.
4. 4-WAY CEILING CASSETTE TYPE FAN COIL UNIT.
5. 12"Ø OUTSIDE AIR DUCT TO TERMINATE THROUGH EXTERIOR WALL WITH 14"X14" EXTERIOR WALL LOUVER. CONFIRM FINISHED COLOR WITH ARCHITECT.
6. 10"Ø EXHAUST DUCT TO TERMINATE THROUGH EXTERIOR WALL WITH WALL CAP. ENSURE 3'-0" DISTANCE FROM BUILDING OPENINGS AND 10'-0" AWAY FROM AIR INTAKE.
7. PROVIDE 12"X10" MAKE-UP AIR DOOR LOUVER.
8. 18"X18" SUPPLY AIR DUCT INSIDE FIRE RATED SHAFT TO TERMINATE UP THROUGH ROOF.
9. 8"X8" EXHAUST AIR DUCT INSIDE FIRE RATED SHAFT TO TERMINATE UP THROUGH ROOF.
10. 10"X10" EXHAUST AIR DUCT INSIDE FIRE RATED SHAFT TO TERMINATE UP THROUGH ROOF.
11. 22"X16" EXHAUST AIR DUCT INSIDE FIRE RATED SHAFT TO TERMINATE UP THROUGH ROOF.
12. 26"X24" SUPPLY AIR DUCT INSIDE FIRE RATED SHAFT TO TERMINATE UP THROUGH ROOF.
13. 22"X22" RETURN AIR DUCT INSIDE FIRE RATED SHAFT TO TERMINATE UP THROUGH ROOF.
14. 30"X16" SUPPLY AIR DUCT INSIDE FIRE RATED SHAFT TO TERMINATE UP THROUGH ROOF.
15. 24"X16" RETURN AIR DUCT INSIDE FIRE RATED SHAFT TO TERMINATE UP THROUGH ROOF.
16. 16"X10" SUPPLY AIR DUCT INSIDE FIRE RATED SHAFT TO TERMINATE UP THROUGH ROOF.
17. 14"X8" RETURN AIR DUCT INSIDE FIRE RATED SHAFT TO TERMINATE UP THROUGH ROOF.
18. 20"X14" SUPPLY AIR DUCT INSIDE FIRE RATED SHAFT TO TERMINATE UP THROUGH ROOF.
19. 18"X14" RETURN AIR DUCT INSIDE FIRE RATED SHAFT TO TERMINATE UP THROUGH ROOF.
20. 12"X12" SUPPLY AIR DUCT INSIDE FIRE RATED SHAFT TO TERMINATE UP THROUGH ROOF.
21. 12"X10" EXHAUST AIR DUCT INSIDE FIRE RATED SHAFT TO TERMINATE UP THROUGH ROOF.
22. 16"X12" EXHAUST AIR DUCT INSIDE FIRE RATED SHAFT TO TERMINATE UP THROUGH ROOF.

N

MECHANICAL FIRST FLOOR PLAN

FILE NAME: H:\PROJECTS\138 CORP FOR BETTER HOUSING\24-001 - FRESNO SENIOR CENTER\01 - CAD\SENIOR CENTER PACKAGE\MECHANICAL\M-2.1 MECHANICAL FIRST FLOOR PLAN.DWG

LAST SAVED: EGARCERO

PLOT STYLE: BREEN DESIGN GROUP.STB

BY: EDGARDO GARCERO JR.

PLOT SCALE: 1:1

DATE PLOTTED: 4/17/2024 10:09 AM

ORIGINAL SIZE: ARCH FULL BLEED E1 (30.00 X 42.00 INCHES)

Y&M Architects
255 South Santa Fe Avenue, Suite 103
Los Angeles, CA 90012
Telephone: 213 623 2107
www.ymarch.com

DRAWN BY	EGARCERO
DESIGNED BY	ECRISTOBAL
CHECKED BY	RJOHNSON
APPROVED BY	RJOHNSON

BREEN DESIGN GROUP
3825 DEL AMO BOULEVARD
TORRANCE, CA 90503
PH: 310 464 8404
WWW.BREENDESIGN.COM

REGISTERED PROFESSIONAL ENGINEER
JOPER O. TUPAS
NO. M-35317
EXP. 06/30/2025
MECHANICAL
STATE OF CALIFORNIA

FRESNO SENIOR CENTER

Integrated Community Development

Project. *	Developer. 20750 Ventura Boulevard, Suite 155 Woodland Hills, CA 91364	Project No.: 138-24-001	Scale: 1/8" = 1'-0"	Date 06.11.24	Page M-2.1

COPYRIGHT ©2024 BREEN DESIGN GROUP

GENERAL NOTES

1. ALL EXHAUST OUTLET TERMINATIONS SHALL NOT BE LESS THAN 3 FEET FROM PROPERTY LINE OR CENTER LINE OF A PUBLIC ALLEY OR STREET, 3 FEET FROM THE EXTERIOR WALL OR ROOF. IT SHALL BE ATLEAST 3 FEET MIN. FROM BUILDING OPENINGS AND 10 FEET ABOVE ADJOINING GRADE.
2. PROVIDE VOLUME DAMPERS TO EACH DIFFUSER, REGISTER AND GRILLE (AIR DEVICES). DAMPERS SHALL BE OPPOSED BLADE ADJUSTABLE TYPE. ALL VOLUME DAMPERS SHALL BE ACCESSIBLE.
3. PROVIDE SHUTDOWN OF HVAC SYSTEM SERVING SMOKE DAMPERS OR COMBINATION SMOKE-FIRE DAMPERS WHEN AUTOMATIC ACTIVATION OF DAMPER OCCURS.

REFERENCE NOTES

1. WALL MOUNTED FAN COIL UNIT.
2. CEILING MOUNTED INLINE EXHAUST/MAKE-UP AIR FAN.
3. INSTALL THERMOSTAT 48" A.F.F.
4. EXHAUST AIR DUCT INSIDE RATED SHAFT TO TERMINATE UP THROUGH ROOF.
5. 16"X12" EXHAUST AIR DUCT INSIDE FIRE RATED SHAFT SERVING BELOW LEVEL.
6. PROVIDE 12"X10" MAKE-UP AIR DOOR LOUVER.
7. 18"X18" SUPPLY AIR DUCT INSIDE FIRE RATED SHAFT TO SERVING BELOW LEVEL FROM MAKE-UP AIR ABOVE ROOF.
8. 10"X10" EXHAUST AIR DUCT INSIDE FIRE RATED SHAFT SERVING BELOW LEVEL.
9. 22"X16" EXHAUST AIR DUCT INSIDE FIRE RATED SHAFT SERVING BELOW LEVEL.
10. 26"X24" SUPPLY AIR DUCT INSIDE FIRE RATED SHAFT SERVING BELOW LEVEL.
11. 22"X22" RETURN AIR DUCT INSIDE FIRE RATED SHAFT SERVING BELOW LEVEL.
12. 30"X16" SUPPLY/RETURN AIR DUCT INSIDE FIRE RATED SHAFT SERVING BELOW LEVEL
13. 16"X10" SUPPLY/RETURN AIR DUCT INSIDE FIRE RATED SHAFT SERVING BELOW LEVEL.
14. 20"X14" SUPPLY AIR DUCT INSIDE FIRE RATED SHAFT SERVING BELOW LEVEL.
15. 12"X12" SUPPLY/RETURN AIR DUCT INSIDE FIRE RATED SHAFT SERVING BELOW LEVEL.
16. 14"X14" EXHAUST AIR DUCT INSIDE FIRE RATED SHAFT SERVING BELOW LEVEL.
17. 18"X18" SUPPLY AIR DUCT TO TERMINATE UP THROUGH ROOF.
18. 12"X12" SUPPLY AIR DUCT TO TERMINATE UP THROUGH ROOF.
19. 20"X20" EXHAUST AIR DUCT TO TERMINATE UP THROUGH ROOF.
20. 28"X28" EXHAUST AIR DUCT INSIDE FIRE RATED SHAFT TO TERMINATE UP THROUGH ROOF.
21. 60"X24" SUPPLY AIR DUCT TO TERMINATE UP THROUGH ROOF.
22. 68"X20" RETURN AIR DUCT TO TERMINATE UP THROUGH ROOF.
23. 18"X12" SUPPLY AIR DUCT TO TERMINATE UP THROUGH ROOF.
24. 26"X12" RETURN AIR DUCT TO TERMINATE UP THROUGH ROOF.
25. 16"X10" SUPPLY/RETURN AIR DUCT TO TERMINATE UP THROUGH ROOF.
26. 30"X14" SUPPLY AIR DUCT TO TERMINATE UP THROUGH ROOF.
27. 36"X14" RETURN AIR DUCT TO TERMINATE UP THROUGH ROOF.
28. 18"X14" RETURN AIR DUCT INSIDE FIRE RATED SHAFT SERVING BELOW LEVEL.
29. 24"X16" RETURN AIR DUCT INSIDE FIRE RATED SHAFT SERVING BELOW LEVEL.
30. 14"X8" RETURN AIR DUCT INSIDE FIRE RATED SHAFT SERVING BELOW LEVEL.

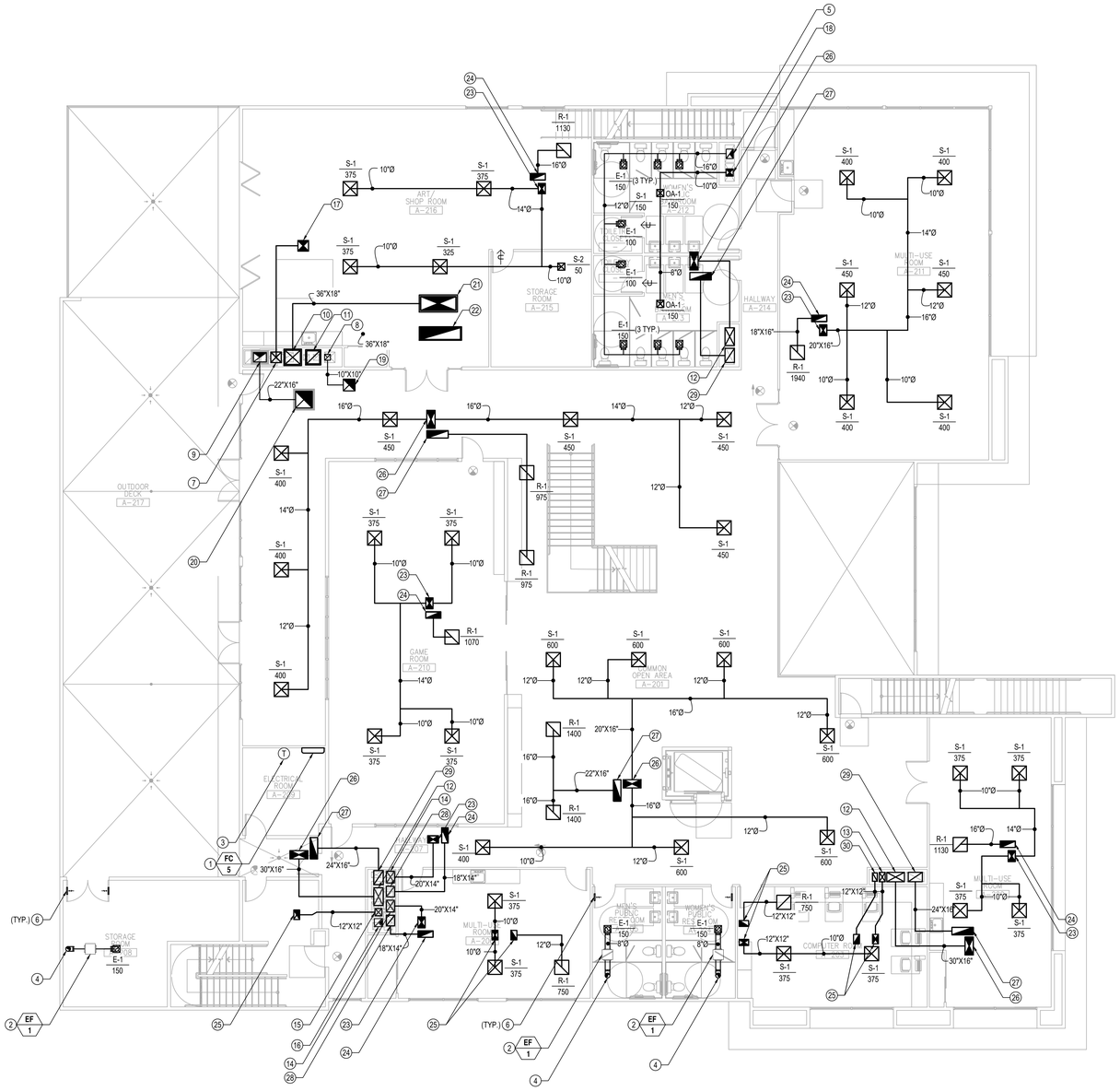

N

MECHANICAL SECOND FLOOR PLAN

DATE PLOTTED: 5/17/2022 4:43 PM
ORIGINAL SIZE: ARCH FULL BLEED E1 (30.00 X 42.00 INCHES)
BY: CHRIS WADE
PLOT SCALE: 1:1
LAST SAVED: KLORENZO
PLOT STYLE: BREEN DESIGN GROUP.STB
FILE NAME: H:\PROJECTS\138 CORP FOR BETTER HOUSING\24-001 - FRESNO SENIOR CENTER\01 - CAD\SENIOR CENTER PACKAGE\MECHANICAL\M-2.2 MECHANICAL SECOND FLOOR PLAN.DWG

Y&M Architects

Y&M Architects
255 South Santa Fe Avenue, Suite 103
Los Angeles, CA 90012
Telephone: 213 623 2107
www.ymarch.com

DRAWN BY	KLORENZO
DESIGNED BY	ECRISTOBAL
CHECKED BY	RJOHNSON
APPROVED BY	RJOHNSON

BREEN DESIGN GROUP
3825 DEL AMO BOULEVARD
TORRANCE, CA 90503
PH: 310 464 8404
WWW.BREENDESIGN.COM

REGISTERED PROFESSIONAL ENGINEER JUPER O. TUPAS NO. M-35317 EXP. 06/30/2025

COPYRIGHT ©2024 BREEN DESIGN GROUP

FRESNO SENIOR CENTER

Integrated Community Development

Project. *	Developer. 20750 Ventura Boulevard, Suite 155 Woodland Hills, CA 91364	Project No.: 138-24-001	Scale: 1/8" = 1'-0"	Date 06.11.24	Page M-2.2

GENERAL NOTES

1. ALL EXHAUST OUTLET TERMINATIONS SHALL NOT BE LESS THAN 3 FEET FROM PROPERTY LINE OR CENTER LINE OF A PUBLIC ALLEY OR STREET, 3 FEET FROM THE EXTERIOR WALL OR ROOF. IT SHALL BE ATLEAST 3 FEET MIN. FROM BUILDING OPENINGS AND 10 FEET ABOVE ADJOINING GRADE.
2. PROVIDE VOLUME DAMPERS TO EACH DIFFUSER, REGISTER AND GRILLE (AIR DEVICES). DAMPERS SHALL BE OPPOSED BLADE ADJUSTABLE TYPE. ALL VOLUME DAMPERS SHALL BE ACCESSIBLE.
3. PROVIDE SHUTDOWN OF HVAC SYSTEM SERVING SMOKE DAMPERS OR COMBINATION SMOKE-FIRE DAMPERS WHEN AUTOMATIC ACTIVATION OF DAMPER OCCURS.

REFERENCE NOTES

1. ROOFTOP PACKAGED UNIT.
2. CONDENSING UNIT ON VIBRATION ISOLATOR.
3. SWAMP COOLER FOR KITCHEN HOOD MAKE-UP AIR.
4. DUCT FURNACE.
5. KITCHEN EXHAUST FAN.
6. EXHAUST AIR DUCT SERVING LEVEL BELOW.
7. 18"X18" MAKE-UP AIR DUCT FROM SWAMP COOLER SERVING THE COMMERCIAL KITCHEN BELOW.
8. CEILING MOUNTED INLINE EXHAUST AIR FAN.
9. ROOF MOUNTED UTILITY SUPPLY/EXHAUST FAN.

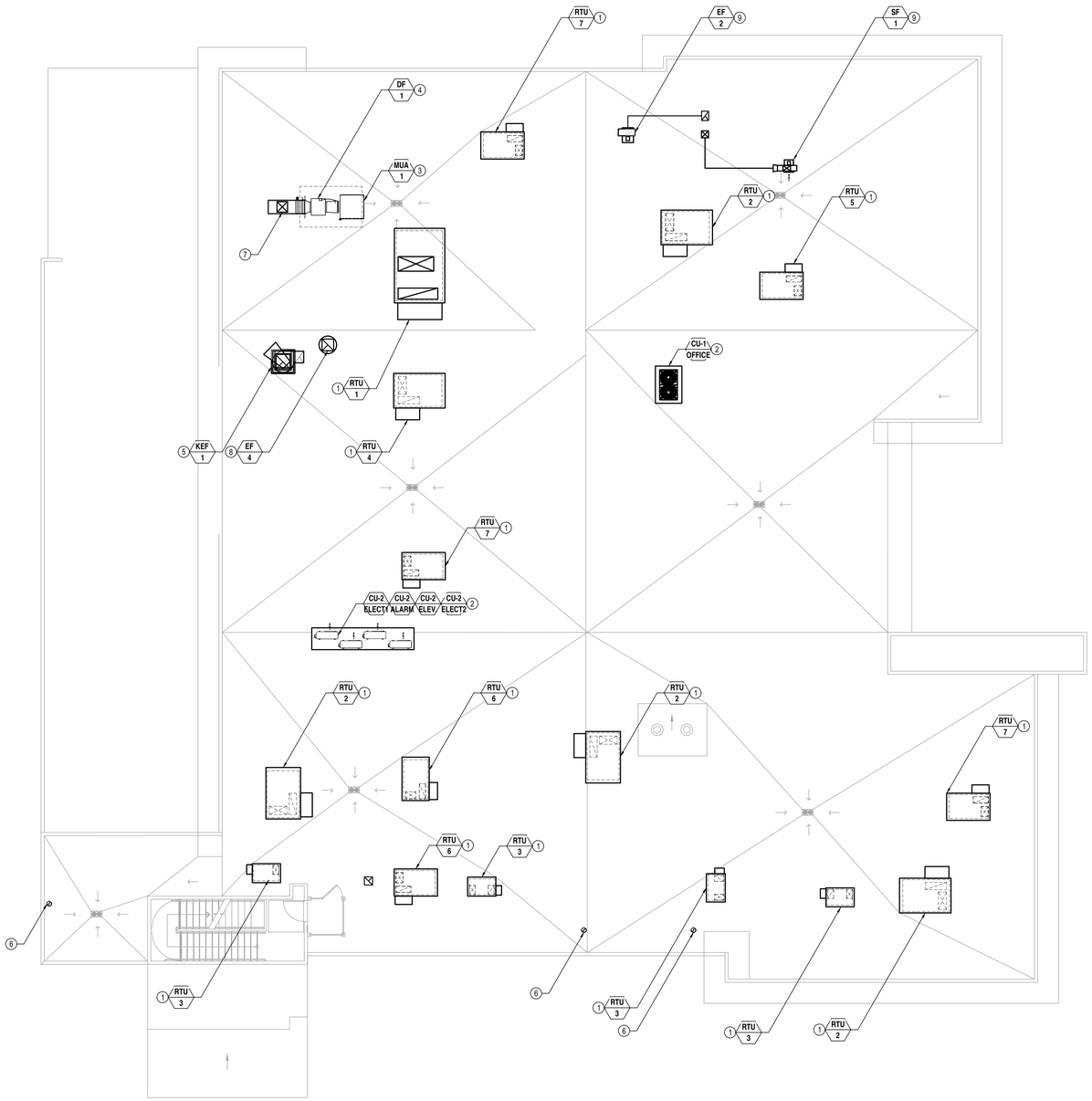

N

MECHANICAL ROOF PLAN

DATE PLOTTED: 5/17/2022 4:43 PM
ORIGINAL SIZE: ARCH FULL BLEED E1 (30.00 X 42.00 INCHES)
BY: KENNY GANATE LORENZO
PLOT SCALE: 1:1
LAST SAVED: KLORENZO
PLOT STYLE: BREEN DESIGN GROUP.STB
FILE NAME: H:\PROJECTS\138 CORP FOR BETTER HOUSING\24-001 - FRESNO SENIOR CENTER\01 - CAD\SENIOR CENTER PACKAGE\MECHANICAL\M-2.3 MECHANICAL ROOF PLAN.DWG

Y&M Architects

Y&M Architects
255 South Santa Fe Avenue, Suite 103
Los Angeles, CA 90012
Telephone: 213 623 2107
www.ymarch.com

DRAWN BY	KLORENZO
DESIGNED BY	ECRISTOBAL
CHECKED BY	RJOHNSON
APPROVED BY	RJOHNSON

BREEN DESIGN GROUP

3825 DEL AMO BOULEVARD
TORRANCE, CA 90503
PH: 310 464 8404
WWW.BREENDESIGN.COM

REGISTERED PROFESSIONAL ENGINEER
JOPER O. TUPAS
NO. M-35317
EXP. 06/30/2025

COPYRIGHT ©2024 BREEN DESIGN GROUP

FRESNO SENIOR CENTER

Integrated Community Development

Project. *	Developer. 20750 Ventura Boulevard, Suite 155 Woodland Hills, CA 91364	Project No.: 138-24-001	Scale: 1/8" = 1'-0"	Date 06.11.24	Page M-2.3

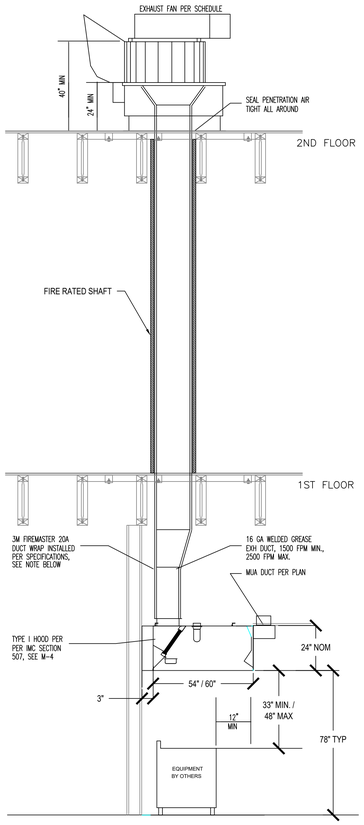

COMMERCIAL KITCHEN HOOD DETAIL 8

GENERAL NOTES

1. NOTE THAT ROOF COMPOSITION SHOWN HERE IS GENERIC AND SHOULD NOT BE USED FOR PRICING OR CONSTRUCTION - IN ALL INSTANCES REFER TO ARCHITECTURAL DRAWINGS FOR ROOF DETAILS.

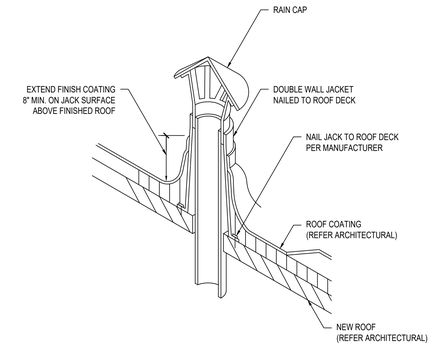

ROOF JACK DETAIL 6

GENERAL NOTES

1. NOTE THAT ROOF COMPOSITION SHOWN HERE IS GENERIC AND SHOULD NOT BE USED FOR PRICING OR CONSTRUCTION - IN ALL INSTANCES REFER TO ARCHITECTURAL DRAWINGS FOR ROOF DETAILS.
2. REFER TO EXHAUST FAN SCHEDULE FOR REQUIRED ACCESSORIES.

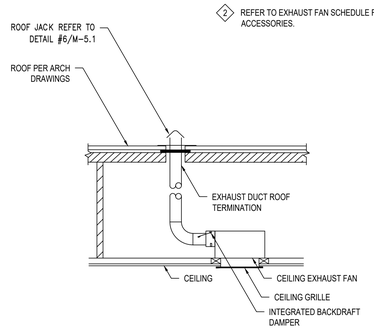

TYPICAL CEILING MOUNTED EXHAUST FAN DETAIL 3

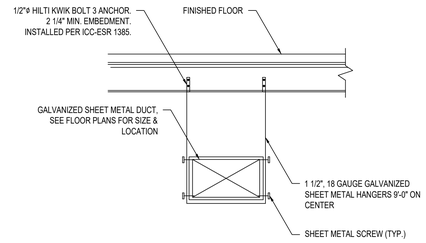

RECTANGULAR DUCT SUPPORT DETAIL 5

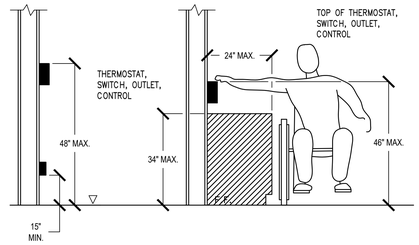

MOUNTING HEIGHT OBSTRUCTION DETAIL 2

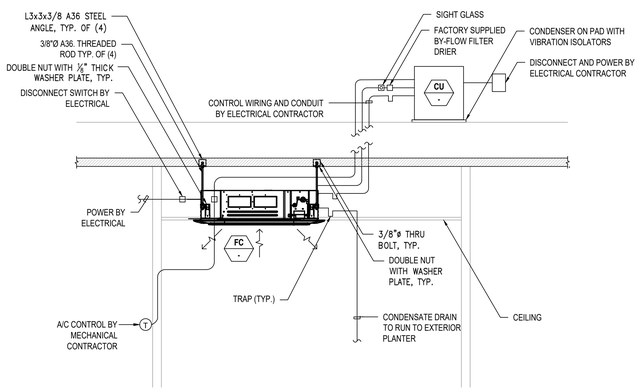

GENERAL NOTES

1. PROVIDE NEOPRENE TUBULAR INSULATION TO ALL REFRIGERANT LINES AND PIPING AT ALL POTENTIAL CONTACT POINTS TO THE BUILDING MEMBERS (WHETHER AT THE STRUCTURE, THE FLOOR LINE OR THE GYPSUM BOARD WALLS).
2. SEE PLUMBING DRAWINGS FOR CONDENSATE.
3. ALL EXTERIOR AND EXPOSED INSULATION SHALL HAVE ALUMINUM JACKET.

4-WAY CASSETTE TYPE DETAIL 7

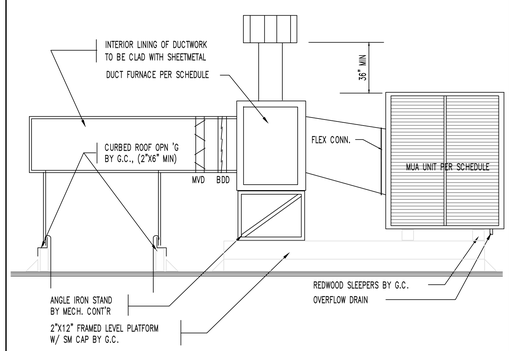

MUA/DUCT FURNACE INSTALLATION DETAIL 4

GENERAL NOTES

1. FOR METAL STUD, OR WOOD STUD WALLS MOUNT TO STUDS, OR REMOVE DRYWALL, PROVIDE BLOCKING CONNECTED TO THE STUDS & REPLACE DRYWALL/PAINT TO MATCH. FOR WOOD INSTALL WITH (4) 1/4" WOOD SCREWS 2" LONG. FOR METAL STUDS INSTALL WITH (4) 1/4" SHEET METAL SCREWS, 1 1/2" LONG.
2. REFRIGERANT, DRAIN, AND POWER CONNECTIONS MAY BE MADE IN UNIT, REAR, BOTTOM, LEFT SIDE OR RIGHT SIDE. INSTALL UNIT AS INSTRUCTED BY MANUFACTURER.

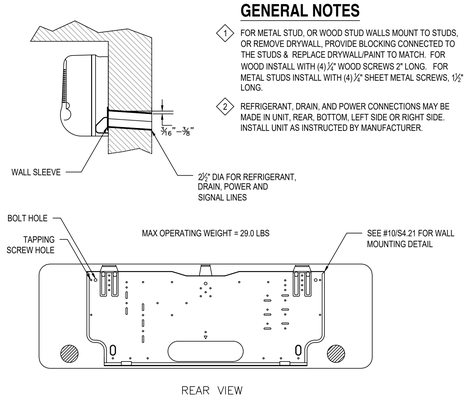

WALL MOUNTED FAN COIL SUPPORT DETAIL 1

MECHANICAL DETAILS

DATE PLOTTED: 5/17/2022 4:43 PM
ORIGINAL SIZE: ARCH FULL BLEED E1 (30.00 X 42.00 INCHES)
BY: KENNY GANATE LORENZO
PLOT SCALE: 1:1
LAST SAVED: LCARMELOTES
PLOT STYLE: BREEN DESIGN GROUP.STB
FILE NAME: H:\PROJECTS\138 CORP FOR BETTER HOUSING\24-001 - FRESNO SENIOR CENTER\01 - CAD\SENIOR CENTER PACKAGE\MECHANICAL\M-5.1 MECHANICAL DETAILS.DWG

Y&M Architects
Y&M Architects
255 South Santa Fe Avenue, Suite 103
Los Angeles, CA 90012
Telephone: 213 623 2107
www.ymarch.com

DRAWN BY	LCARMELOTES
DESIGNED BY	ECRISTOBAL
CHECKED BY	RJOHNSON
APPROVED BY	RJOHNSON

BREEN DESIGN GROUP
3825 DEL AMO BOULEVARD
TORRANCE, CA 90503
PH: 310 464 8404
WWW.BREENDESIGN.COM

REGISTERED PROFESSIONAL ENGINEER JOSEPH O. TUPAS NO. M-35317 EXP. 06/30/2025 MECHANICAL

COPYRIGHT ©2024 BREEN DESIGN GROUP

FRESNO SENIOR CENTER

Integrated Community Development

Project. *

Developer. 20750 Ventura Boulevard, Suite 155
Woodland Hills, CA 91364

Project No.: 138-24-001 Scale: N.T.S. Date 06.11.24 Page M-5.1

PLUMBING GENERAL NOTES

1. SCOPE OF WORK:

   A. FURNISH ALL LABOR, SUPERVISION, MATERIALS, EQUIPMENT & FACILITIES NECESSARY TO FURNISH, FABRICATE, DELIVER, STORE AND INSTALL ALL WORK NOTED ON THE DRAWINGS.

   B.THE CONTRACTOR SHALL FURNISH & INSTALL ALL WORK NECESSARY TO MAKE A COMPLETE SYSTEM WHETHER OR NOT SUCH DETAILS ARE MENTIONED IN THESE SPECIFICATIONS OR SHOWN ON THE PLANS, BUT WHICH ARE OBVIOUSLY NECESSARY TO MAKE A COMPLETE SYSTEM, EXCEPTING ONLY THOSE PORTIONS THAT ARE SPECIFICALLY MENTIONED HEREIN OR PLAINLY MARKED ON THE ACCOMPANYING DRAWINGS AS BEING INSTALLED UNDER ANOTHER SECTION OF THE SPECIFICATION.

2. CODES AND PERMITS: ALL MECHANICAL EQUIPMENT, INSTALLATION, ETC., SHALL CONFORM TO ALL APPLICABLE CODES AND ORDINANCES, INCLUDING CALIFORNIA TITLE 24. CONSTRUCTION SHALL COMPLY WITH THE FOLLOWING PARTS OF TITLE 24, CALIFORNIA CODE OF REGULATIONS (CCR):

   TITLE 24, PART 2, CCR (2022 CALIFORNIA BUILDING CODE W/AMENDMENTS)
   TITLE 24, PART 3, CCR (2022 CALIFORNIA ELECTRICAL CODE W/AMENDMENTS)
   TITLE 24, PART 4, CCR (2022 CALIFORNIA MECHANICAL CODE W/AMENDMENTS)
   TITLE 24, PART 5, CCR (2022 CALIFORNIA PLUMBING CODE W/AMENDMENTS)
   TITLE 24, PART 9, CCR (2022 CALIFORNIA FIRE CODE W/AMENDMENTS)
   TITLE 24, PART 11, CCR (2022 CALIFORNIA GREEN BUILDING STANDARDS)
   NFPA 13 (2022) - STANDARD FOR THE INSTALLATION OF SPRINKLER SYSTEM
   NFPA 14 (2022) - STANDARD FOR THE INSTALLATION OF STAND/PIPE AND HOSE SYSTEMS
   NFPA 72 (2022) - NATIONAL FIRE ALARM AND SIGNALING CODE.
   CONTRACTOR SHALL OBTAIN AND PAY FOR ALL PERMITS & INSPECTIONS.

3. ALL PIPE, PIPE FITTINGS, TRAPS, FIXTURES, MATERIAL, AND DEVICES USED IN THE PLUMBING SYSTEM SHALL BE LISTED OR THIRD-PARTY CERTIFIED BY AN APPROVED LISTING AGENCY AND SHALL CONFORM TO APPLICABLE RECOGNIZED STANDARDS REFERENCED IN THE 2022 CITY OF LOS ANGELES PLUMBING CODE.

4. SITE INSPECTION: CONTRACTOR SHALL VISIT THE SITE OF WORK PRIOR TO SUBMISSION OF HIS BID AND THOROUGHLY FAMILIARIZE HIMSELF WITH THE WORKING CONDITIONS & EXACT NATURE OF THE WORK. SUBMISSION OF A BID ACKNOWLEDGES FULL RESPONSIBILITY FOR FURNISHING A COMPLETE & FUNCTIONAL SYSTEM. NO CHANGES IN CONTRACT WILL BE MADE TO ACCOMMODATE OR ALLOW EXTRA FUNDING FOR ANY OMISSIONS WHICH RESULTS FROM A FAILURE TO THOROUGHLY MAKE THE EXAMINATION.

5. LOCATIONS OF UTILITIES SHOWN ARE APPROXIMATE. CONTRACTOR SHALL VERIFY EXACT LOCATIONS AND DEPTHS OF UTILITIES PRIOR TO STARTING WORK OF THIS SECTION. MAKE REQUIRED ADJUSTMENTS TO CONNECT TO UTILITIES. IF INDICATED POINTS OF CONNECTION CANNOT BE MADE TO EXISTING UTILITIES AS FOUND. THE CONTRACTOR SHALL, BEFORE CONTINUING, NOTIFY THE ENGINEER PRIOR TO INSTALLING ANY WORK WHICH MAY BE AFFECTED.

6. ALL DIMENSIONS AND LOCATIONS PER ARCHITECTURAL DRAWINGS.

7. IT SHALL BE THE CONTRACTORS RESPONSIBILITY TO VERIFY AVAILABLE SPACES FOR INSTALLING THE WORK.

8. COORDINATION: THE DRAWINGS ARE DIAGRAMMATIC & INTENDED TO SHOW SCOPE. CONTRACTOR SHALL COORDINATE HIS WORK WITH OTHER TRADES TO PROVIDE BEST ARRANGEMENT OF ALL DUCT, PIPES, CONDUIT, ETC.

9. WORKMANSHIP: THE WORK SHALL BE ACCOMPLISHED IN A THOROUGH & WORKMANLIKE MANNER SATISFACTORY TO AND MEETING THE APPROVAL OF THE ENGINEER AND ARCHITECT.

10. GUARANTEE: CONTRACTOR SHALL UNCONDITIONALLY GUARANTEE ALL LABOR & MATERIAL ON ALL WORK AGAINST DEFECTS IN WORKMANSHIP & MATERIALS FOR A PERIOD OF ONE YEAR.

11. MATERIALS: ALL MATERIALS, APPLIANCES & EQUIPMENT SHALL BE NEW & THE BEST OF THEIR RESPECTIVE KIND. FREE FROM ALL DEFECTS AND OF THE MAKE, BRAND, AND QUANTITY SPECIFIED.

12. SUBMITTALS: CONTRACTOR SHALL PROVIDE (VIA A HARD COPY OR ELECTRONIC FORMAT) MARKED UP CATALOG INFORMATION & CUTS OF ALL EQUIPMENT, DEVICES & TRIM SHALL BE SUBMITTED FOR REVIEW. ALL SUBMITTALS TO BE APPROVED BY ARCHITECT & ENGINEER. SUBMITTALS SHALL CONFORM TO THE REQUIREMENTS OF PROJECT SPECIFICATION (SECTION 013300) IF PROVIDED.

13. SHOP DRAWING: CONTRACTOR SHALL PRODUCE (VIA A HARD COPY OR ELECTRONIC FORMAT) SHOP DRAWINGS TO AN ACCURATE SCALE THAT IS LARGE ENOUGH TO INDICATE ALL PERTINENT FEATURES AND METHODS. ALL SHOP DRAWINGS TO BE APPROVED BY ARCHITECT & ENGINEER. SUBMITTALS SHALL CONFORM TO THE REQUIREMENTS OF PROJECT SPECIFICATION (SECTION 013300) IF PROVIDED.

14. ALL HOT WATER SUPPLY AND RECIRCULATION PIPING TO BE INSULATED AS PER 2022 CPC, CHAPTER 6 SECTION 609.12 AND AS PER CEC SECTION 120.3(C) AS FOLLOWS:

PIPE SIZE, IN.	INSULATION THICKNESS, IN. (K=0.22-0.28 BTU-IN / H-SQ.FT. °F)	MINIMUM R-VALUE
½" THROUGH ¾"	1"	7.7
1" THROUGH 1½"	1½"	12.5
2" THROUGH 3"	2"	11
4" THROUGH 6"	2"	9
8" & LARGER	2"	8

15. CLEAN-OUTS SHALL BE INSTALLED AS PER SEC. 707 AND 719 OF THE PLUMBING CODE.

16. PROVIDE FELT WITH METAL BACKING VIBRATION ISOLATION SLEEVES OR PADS AT ALL PIPE HANGERS OR SUPPORTS AND ALL POINTS WHERE PIPING COMES IN CONTACT WITH ANY PORTION OF THE STRUCTURE. APPLIES TO ALL WATER AND WASTE PIPING. PROVIDE FELT AROUND ALL PVC PIPING AT SUPPORTS FOR THERMAL EXPANSION.

17. ALL PIPES, DUCTS AND CONDUITS SHALL BE SUPPORTED AND BRACED PER "SMACNA" GUIDE LINES.

18. PLUMBERS TAPE WILL NOT BE ACCEPTED AS A PERMANENT SUPPORT FOR ANY PIPING OR DEVICES.

19. VALVES SHALL FULL FLOW 1/4 TURN BALL TYPE BE NIBCO, WATTS, CRANE, STOCKHAM OR EQUAL. SERVICE PRESSURE SHALL BE SUITABLE FOR SERVICE INTENDED. PROVIDE AND INSTALL IDENTIFICATION TAGS ON ALL VALVES. VALVES IN EXPOSED COMMON AREAS TO HAVE LOCKING HANDLES. NO IRON BODY VALVES WILL BE ACCEPTED.

20. PROVIDE AND INSTALL DIELECTRIC UNIONS BETWEEN ALL COPPER AND GALVANIZED & IRON PIPING & COMPONENTS. (AS WATTS, ZURN OR EQUAL).

21. PENETRATIONS IN WALLS, FLOORS, OR CEILINGS, WHICH REQUIRE PROTECTED OPENINGS SHALL BE FIRE-STOPPED. FIRE-STOPPING SHALL BE AN APPROVED MATERIAL, SECURELY INSTALLED AND CAPABLE OF MAINTAINING ITS INTEGRITY WHEN SUBJECTED TO THE TIME-TEMPERATURE CURVED OF SFM STD. # 12-43-3 AND STD. # 12-43-1. INSTALLATION INSTRUCTIONS SHALL BE MADE AVAILABLE TO THE INSPECTION AUTHORITY AND BE MAINTAINED AT THE JOB SITE.

22. PROVIDE WATERTIGHT FLASHING WHEREVER PIPES PASS THROUGH EXTERIOR WALLS, ROOF AND FLOORS.

23. CUTTING AND PATCHING: ALL CUTTING & PATCHING OF THE EXISTING STRUCTURE SHALL BE PROVIDED. PROVIDE ALL NECESSARY REQUIREMENTS TO THE PROJECT MANAGER. PROTECTION AGAINST DUST AND DEBRIS SHALL BE TO THE SATISFACTION OF THE PROJECT MANAGER.

24. CLEANUP: UPON COMPLETION OF THE WORK UNDER THIS SECTION THE CONTRACTOR SHALL REMOVE ALL SURPLUS MATERIALS. EQUIPMENT & DEBRIS INCIDENTAL TO THIS WORK & LEAVE THE PREMISES CLEAN AND ORDERLY. PROVIDE NEW CEILING TILES (TO MATCH EXISTING) IF ANY DAMAGED DURING CONSTRUCTION.

25. FIRE SPRINKLER SYSTEM TO BE HYDRAULICALLY DESIGNED BY FIRE SPRINKLER CONTRACTOR. ALL EQUIPMENT, COMPONENTS & PIPE RUNS SHOWN FOR REFERENCE ONLY.

26. ALL SEWER LINES RUN @ SLOPES LESS THAN 2% ARE SUBJECT TO FIELD APPROVAL OF PLUMBING INSPECTOR.

27. WASTE PIPE SIZES THAT ARE 3 INCHES OR SMALLER SHALL BE EVALUATED AT 2% SLOPE.

28. WATER, SEWER, VENT, FIRE AND GAS PIPES THROUGH CONCRETE WALLS AND FLOORS SHALL HAVE PIPE-SLEEVES WITH NON COMBUSTIBLE SEALING.

29. ALL HOSE BIBBS SHALL BE EQUIPPED WITH AN APPROVED NON REMOVABLE VACUUM BREAKER.

30. RUN A FULL SIZE DRAIN LINE FROM WATER HEATERS TEMPERATURE AND PRESSURE RELIEF VALVE TO NEAREST FLOOR SINK OR TO AN APPROVED LOCATION.

31. PROVIDE ACCESS DOORS TO ALL CONCEALED VALVES, STRAINERS, TRAP PRIMERS, ETC.

32. ALL PIPING IN FINISHED AREAS SHALL BE RUN CONCEALED. EXPOSED PIPING, WHERE NECESSARY, SHALL RUN AS HIGH AS POSSIBLE AND TIGHT TO THE WALLS.

33. NO VENT OUTLET SHALL TERMINATE CLOSER THAN FOUR FEET TO OR ONE FOOT ABOVE ANY DOOR, WINDOW OR GRAVITY AIR INTAKE, NOR CLOSER THAN TEN FEET TO OR THREE FEET ABOVE ANY FORCED OR MECHANICAL AIR INTAKE.

34. ALL VENTS AND FLUE OUTLETS SHALL BE A MINIMUM OF 10 FEET FROM ANY FRESH AIR INTAKES.

35. TYPE B VENTS SHALL TERMINATE 2 FT. ABOVE OR 8 FT. AWAY FROM ANY VERTICAL SURFACE.

36. WATER HEATERS SHALL BE SEISMICALLY BRACED.

37. INSTALL WATER HAMMER ARRESTORS ON EACH COLD AND HOT WATER FIXTURE BRANCH AS RECOMMENDED BY PLUMBING AND DRAINAGE INSTITUTE WH-210 STANDARD. DEVICES SHALL BE FACTORY MADE WITH PERMANENT CUSHION OF GAS OR PROVIDE ACCESS PANEL.

38. BATHTUBS, SHOWERS AND LAVATORIES TO COMPLY WITH 2019 CPC CHAPTER 4, ASSE 1070, & ASSE 1016 REQUIREMENT.

39. LAVATORY CONTROLS SHALL LIMIT THE FLOW RATE 0.5 GPM AND 110°F FOR PUBLIC AND 1.2 GPM FOR RESIDENTIAL.

40. SHOWER TUB-SHOWER COMBINATION SHALL HAVE INDIVIDUAL SHOWER CONTROL VALVE OF THE PRESSURE BALANCE OR THE THERMOSTATIC MIXING VALVE TYPE, SET AT 120°F MAXIMUM.

41. USE FEMALE COPPER NIPPLE TO MALE MALE PLASTIC PIPE FOR COPPER TO PLASTIC TRANSITION.

42. BOILERS SHALL COMPLY WITH ALL THE REQUIREMENTS OF CHAPTER 10 OF CMC 2022.

43. PROVIDE EXPANSION TANK FOR BOILERS PER SECTION 1005.0 CMC 2022.

44. BUILDING DRAIN AND VENT PIPING MATERIALS SHALL COMPLY WITH SECTIONS 701.0 AND 903.0 OF THE CALIFORNIA PLUMBING CODE.

45. ALL SANITARY SYSTEM MATERIALS SHALL BE LISTED BY AN APPROVED LISTING AGENCY.

46. EACH VENT SHALL RISE VERTICALLY TO A POINT NOT LESS THAN SIX (6) INCHES ABOVE THE FLOOD-LEVEL RIM OF THE FIXTURE SERVED BEFORE OFFSETTING HORIZONTALLY OR BEFORE BEING CONNECTED TO ANY OTHER VENT.

47. LABEL MEDIUM PRESSURE GAS EVERY FIVE FEET.

48. PLUMBING FIXTURES AND FITTINGS SHALL COMPLY WITH ALL THE REQUIREMENTS IN SECTION 5.303 IN THE 2022 GREEN BUILDING STANDARDS CODE.

49. ROUTING AND TERMINATION OF FLUE FOR EACH BOILER SHALL COMPLY WITH CHAPTER 8, CMC 2022 AND WITH MANUFACTURER'S SPECIFICATIONS AND INSTALLATION INSTRUCTIONS.

50. WATER SUPPLY AND DRAIN PIPES UNDER ACCESSIBLE LAVATORIES AND SINKS SHALL BE INSULATED OR OTHERWISE BE CONFIGURED TO PROTECT AGAINST CONTACT. PROTECTORS, INSULATORS, OR BOTH SHALL COMPLY WITH ASME A112.18.9.

51. NEW OR REPAIRED POTABLE WATER SYSTEMS SHALL BE DISINFECTED PRIOR TO USE ACCORDING TO SECTION 609.9 (1-3) OF THE PLUMBING CODE. CONTRACTOR SHALL PROVIDE A SIGNED WRITTEN DECLARATION THAT POTABLE WATER SYSTEM HAS BEEN DISINFECTED PER SECTION 609.9.

52. ALL CLEANOUTS FOR BUILDING STORM DRAINS SHALL COMPLY WITH THE REQUIREMENTS OF SECTION 719 OF THE PLUMBING CODE SEC 1101.13.

53. RAINWATER PIPING LOCATED ON THE EXTERIOR OF A BUILDING SHALL BE PER TABLE 701.2 ABOVE GROUND DWV PIPE, ALUMINUM, GALVANIZED STEEL OR COPPER SHEET METAL. SEC 1101.4.3.

54. LEADERS INSTALLED IN AREAS WHERE IT IS EXPOSED TO DAMAGE SHALL BE PROTECTED BY METAL GUARDS, RECESSED INTO THE WALL OR CONSTRUCTED FROM FERROUS PIPE. SEC 1101.6.1.

55. PUBLIC LAVATORIES SHALL HAVE A TEMPERING DEVICE THAT COMPLIES WITH ASSE 1070, ASME 112.1070 OR CSA B125.3. WATER HEATER THERMOSTAT SHALL NOT BE CONSIDERED A CONTROL TO MEET THIS PROVISION. 407.3.

56. ROOF DRAIN AND OVERFLOW PIPING WITHIN THE BUILDING SHALL UTILIZE APPROVED DRAINAGE FITTINGS. SEC 1101.1.

57. NEW STORM DRAINAGE SYSTEMS SHALL BE TESTED IN ACCORDANCE WITH ONE OF THE METHODS PER SECTION 1107.2 OF THE CALIFORNIA PLUMBING CODE.

58. ALL FIXTURES, EQUIPMENT, PIPING AND MATERIAL SHALL BE LISTED.

59. ALL PLUMBING FIXTURES SHALL MEET THE FLOW REQUIREMENTS SPECIFIED ON THE PLUMBING CODE CHAPTER 4.

60. WATER PIPES AND FITTINGS WITH A LEAD CONTENT WHICH EXCEEDS 0.25% SHALL BE PROHIBITED ON SYSTEMS CONVEYING POTABLE WATER.

61. EACH PLUMBING VENT SHALL TERMINATE NOT LESS THAN TEN (10) FEET FROM OR AT LEAST THREE (3) FEET ABOVE ANY OPENABLE WINDOW, DOOR, OPENING OR AIR INTAKE. 906.2.

62. ONE OR MORE FULL WAY VALVE(S) SHALL BE INSTALLED FOR EACH APARTMENT OR DWELLING. IN LIEU OF MAIN SUPPLY SHUT-OFF IN EACH APARTMENT, INDIVIDUAL SHUT-OFF VALVES MAY BE PROVIDED AT EACH FIXTURE. 606.3.

63. THE CONTRACTOR SHALL PROVIDE A FULL TESTING & BALANCING REPORT NOTING FLOW AND VALVE SETTINGS FOR ALL MANUAL BALANCING VALVES OR CIRCUIT SETTERS INSTALLED IN THE HOT WATER RECIRCULATION SYSTEM.

64. SEPARATE SUB METERS SHALL BE INSTALLED AS FOLLOWS:

   A. FOR EACH INDIVIDUAL LEASED, RENTED OR OTHER TENANT SPACE WITHIN THE BUILDING PROJECTED TO CONSUME MORE THAN 100 GAL/DAY.

   B.WHERE METERS FOR INDIVIDUAL BUILDINGS TENANTS ARE UNFEASIBLE, FOR WATER SUPPLIED TO THE FOLLOWING SUBSYSTEMS:

      i. MAKE UP WATER FOR COOLING TOWERS WHERE FLOW THROUGH THE GREATER THAN 500 GPM.
      ii. MAKE UP WATER FOR EVAPORATIVE COOLERS GREATER THAN 6 GPM.
      iii. STEAM AND HOT WATER BOILERS WITH ENERGY INPUT MORE THAN 500,000 BTU/H.

   C. FOR EACH BUILDING THAT USES MORE THAN 100 GALLONS PER DAY ON A PARCEL CONTAINING MULTIPLE BUILDING.

65. LOW-INCOME HOUSING IS EXEMPT OF SUBMETERING PER SENATE BILL 7, CHAPTER 623, SEC 3, 17922.14 (C)(2)(B).

66. THE CONTRACTOR SHALL PROVIDE PIPING THERMAL EXPANSION LOOPS IN ACCORDANCE WITH THE MANUFACTURER'S INSTALLATION GUIDE.

PIPING MATERIAL SCHEDULE

SERVICE	MATERIAL	COPPER, TYPE "L"	COPPER, TYPE "M"	SCHED. 40 BLACK STEEL	C.I. SOIL PIPE & FITTINGS	SCHED. 80 C.P.V.C./SDR 11 CPVC	COPPER DWV	ABS OR PVC SCHED. 40 PIPE & FITTINGS	REMARKS
DOMESTIC COLD WATER	INSIDE	●				●			ALL PIPING ABOVE GROUND MAIN DISTRIBUTION, RISERS & BRANCH LINES TO PEX MANIFOLD INLET IN THE UNITS ARE TO BE HARVEL SDR11 FLOWGUARD GOLD CPVC FOR 2" & SMALLER AND CORZAN SCHEDULE 80 CPVC PIPE AND FITTINGS FOR 3" & BIGGER, LARR #5695. USE UPONOR PEX WITH COLD EXPANSION FITTINGS INSIDE THE APARTMENT UNITS FROM MANIFOLD TO THE FIXTURE, LARR #5482. COPPER TYPE "L" WILL BE USED FOR WATER HEATER CONNECTIONS. INSTALLATION OF CPVC FOR DOMESTIC WATER LINES IN RESIDENTIAL BUILDINGS SHALL COMPLY WITH THE REQUIREMENTS IN CPC SECTION 604.1.1. INSTALLATION OF PEX FOR DOMESTIC WATER LINES IN RESIDENTIAL BUILDINGS SHALL COMPLY WITH THE REQUIREMENTS IN CPC SECTION 604.1.2. PLASTIC-COPPER TRANSITION FOR WATER HEATER CONNECTION SHALL BE MADE RIGHT AT EXTERIOR, CPVC CANNOT BE EXPOSED TO SUNLIGHT. SEE CIVIL PLANS FOR ON SITE PIPING MATERIALS.
	OUTSIDE	●							
DOMESTIC HOT WATER	INSIDE	●				●			ALL PIPING ABOVE GROUND MAIN DISTRIBUTION, RISERS & BRANCH LINES TO PEX MANIFOLD INLET IN THE UNITS ARE TO BE HARVEL SDR11 FLOWGUARD GOLD CPVC FOR 2" & SMALLER AND CORZAN SCHEDULE 80 CPVC PIPE AND FITTINGS FOR 3" & BIGGER, LARR #5695. USE UPONOR PEX WITH COLD EXPANSION FITTINGS INSIDE THE APARTMENT UNITS FROM MANIFOLD TO THE FIXTURE, LARR #5482. COPPER TYPE "L" WILL BE USED FOR WATER HEATER CONNECTIONS. INSTALLATION OF CPVC FOR DOMESTIC WATER LINES IN RESIDENTIAL BUILDINGS SHALL COMPLY WITH THE REQUIREMENTS IN CPC SECTION 604.1.1. INSTALLATION OF PEX FOR DOMESTIC WATER LINES IN RESIDENTIAL BUILDINGS SHALL COMPLY WITH THE REQUIREMENTS IN CPC SECTION 604.1.2. PLASTIC-COPPER TRANSITION FOR WATER HEATER CONNECTION SHALL BE MADE RIGHT AT EXTERIOR, CPVC CANNOT BE EXPOSED TO SUNLIGHT. SEE CIVIL PLANS FOR ON SITE PIPING MATERIALS.
	OUTSIDE	●							
SANITARY/WASTE SEWER	INSIDE				●		●		USE CAST IRON ABOVE GROUND INSIDE OF THE BUILDING. USE PVC FOR WASTE MAINS ON THE UPPER TWO LEVELS AND FOR PIPING BELOW FINISH FLOOR. SEE CIVIL PLANS FOR ON SITE PIPING MATERIALS.
	OUTSIDE						●		
SANITARY/WASTE VENT	INSIDE				●		●		USE CAST IRON ABOVE GROUND INSIDE OF THE BUILDING. USE PVC FOR WASTE MAINS ON THE UPPER TWO LEVELS AND FOR PIPING BELOW FINISH FLOOR. SEE CIVIL PLANS FOR ON SITE PIPING MATERIALS.
	OUTSIDE						●		
CONDENSATE DRAIN	INSIDE		●						APPLY INSULATION TO CONDENSATE PIPING WHERE APPLICABLE, REFER TO THE CONTRACT SPECIFICATIONS. PVC CAN BE USED IN LIEU OF COPPER. EXPOSED PVC PIPING SHOULD BE PAINTED WITH LATEX PAINT FOR SUNLIGHT PROTECTION.
	OUTSIDE								
TRAP PRIMER	INSIDE		●						ROLLED COPPER WITH SLEEVE.
	OUTSIDE								
STORM DRAINAGE	INSIDE				●				USE CAST IRON ABOVE GROUND INSIDE OF THE BUILDING. USE PVC FOR BELOW GRADE. USE PVC ON THE HIGHEST TWO STORIES. SEE CIVIL PLANS FOR ON SITE PIPING MATERIALS.
	OUTSIDE						●		

PLUMBING LEGEND

SYMBOL	ABBREVIATION	DESCRIPTION
		PIPE-TURN DOWN
		PIPE-TURN UP
	CW	DOMESTIC COLD WATER
	HW	DOMESTIC HOT WATER
	HWR	DOMESTIC HOT WATER RETURN
	W	WASTE BELOW GRADE
	W	WASTE ABOVE GRADE
GD	GD	GREYWATER BELOW GRADE
GD	GD	GREYWATER ABOVE GRADE
	V	SANITARY VENT
	V	SANITARY VENT BELOW GRADE
G	G	GAS (LOW PRESSURE)
MPG	MPG	MEDIUM PRESSURE GAS
TPL	TPL	TRAP PRIMER LINE
IRR	IRR	IRRIGATION LINE
CD	CD	A.C. CONDENSATE DRAIN
SCD	SCD	SECONDARY CONDENSATE DRAIN
	SOV	SHUT-OFF VALVE
	CV	CHECK VALVE
	SOV YB	SHUT-OFF VALVE IN YARD BOX
	BV	BALANCING VALVE
	GC	GAS COCK
	PRV	PRESSURE REDUCING VALVE STATION
	TMV	TEMPERATURE MIXING VALVE
	FCO/COTG	FLOOR TYPE WASTE LINE CLEANOUT/CLEANOUT TO GRADE
	WCO	WALL TYPE WASTE LINE CLEANOUT
	FD	FLOOR DRAIN (ROUND)
WHA	WHA	WATER HAMMER ARRESTOR
S=2%		DIRECTION OF SLOPE
		INDICATES DIRECTION OF FLOW
	UN	UNION (FOR TYPE SEE SPEC.)
	HB	HOSE BIBB

TERMS AND ABBREVIATIONS

ABBREVIATION	DESCRIPTION
ABV	ABOVE
AP	ACCESS PANEL
BEL	BELOW
CB	CATCH BASIN
CO	CLEANOUT
COTG	CLEANOUT TO GRADE
CLG	CEILING
CONN	CONNECT OR CONNECTION
DA	DISABLED ACCESS
DN	DOWN
EXIST/(E)	EXISTING
FF	FINISH FLOOR
FR	FROM
FCO	FLOOR CLEANOUT
FLR	FLOOR
GRD	GRADE
HDR	HEADER
PDP	PUMP DISCHARGE PIPING
SSD	SUB-SURFACE DRAIN
TYP	TYPICAL
MH	MANHOLE
VTR	VENT THRU ROOF
@	AT
BLDG.	BUILDING
#	NUMBER
(N)	NEW
(R)	REMOVE

PLUMBING SHEET INDEX

SHEET NUMBER	SHEET TITLE	CURRENT ISSUE
P-0.1	PLUMBING GENERAL NOTES, SYMBOLS LEGEND & SHEET INDEX	100% DD
P-0.2	PLUMBING SCHEDULES	100% DD
P-0.3	PLUMBING CALCULATIONS	100% DD
P-1.0	PLUMBING SITE PLAN	100% DD
P-2.1	PLUMBING FIRST FLOOR PIPING PLAN	100% DD
P-2.2	PLUMBING SECOND FLOOR PIPING PLAN	100% DD
P-2.3	PLUMBING ROOF PLAN	100% DD
P-3.1	PLUMBING ENLARGED PLANS - SHEET ONE	100% DD
P-3.2	PLUMBING ENLARGED PLANS - SHEET TWO	100% DD
P-5.1	PLUMBING DETAILS - SHEET ONE	100% DD
P-5.2	PLUMBING DETAILS - SHEET TWO	100% DD

FILE NAME: H:\PROJECTS\138 CORP FOR BETTER HOUSING\24-001 - FRESNO SENIOR CENTER\01 - CAD\SENIOR CENTER PACKAGE\PLUMBING\P-0.1 PLUMBING GENERAL NOTES, SYMBOLS LEGEND & SHEET INDEX.DWG

LAST SAVED: JGRAVELA
PLOT STYLE: BREEN DESIGN GROUP.STB

BY: JERRY GRAVELA
PLOT SCALE: 1:1

DATE PLOTTED: 5/17/2022 4:43 PM
ORIGINAL SIZE: ARCH FULL BLEED E1 (30.00 X 42.00 INCHES)

PLUMBING GENERAL NOTES, SYMBOLS LEGEND & SHEET INDEX

Y&M Architects

Y&M Architects
255 South Santa Fe Avenue, Suite 103
Los Angeles, CA 90012
Telephone: 213 623 2107
www.ymarch.com

DRAWN BY	LF, AT
DESIGNED BY	JT
CHECKED BY	JT
APPROVED BY	PB

BREEN DESIGN GROUP
3825 DEL AMO BOULEVARD
TORRANCE, CA 90503
PH: 310 464 8404
WWW.BREENDESIGN.COM

REGISTERED PROFESSIONAL ENGINEER JUPER O. TUPAS NO. M-35317 EXP. 06/30/2025

FRESNO SENIOR CENTER

Integrated Community Development

Project. *	Developer. 20750 Ventura Boulevard, Suite 155 Woodland Hills, CA 91364	Project No.: 138-24-001	Scale: NONE	06.11.24 Date	P-0.1 Page

COPYRIGHT ©2024 BREEN DESIGN GROUP

DOMESTIC HOT WATER BOILER SCHEDULE

MARK	MAKE	MODEL	SERVICE	LOCATION	QTY	CAPACITY (MBH)		FLOW (GPM)	PRESSURE DROP (FT.)	RECOVERY RATE @ 80° °F	ELECTRICAL DATA			STACK DIAMETER (IN.)	SHIPPING WEIGHT (LBS.)	OPERATING WEIGHT (LBS.)	REMARKS
						INPUT	OUTPUT				V	PHASE	HZ				
B-1	RAYPAK	HI DELTA-TYPE WH HD101	DOMESTIC HOT WATER	FIRST FLOOR	2	100	83	26	3.0	124	120	1	60	4	150	-	INDOOR TYPE, FACTORY INSTALLED LOOP WATER PUMP AT 1 HP, TYPE "B" VENT, DIGITAL CONTROLLER, LOW NOx. FURNISHED WITH HIGH EFFICIENCY BURNER TO HAVE 0.85 ENERGY FACTOR AND 0.87 RECOVERY FACTOR.

TANK SCHEDULE

MARK	MAKE	MODEL	SERVICE	LOCATION	QTY	CAPACITY GALLONS	DIMENSIONS	SHIP WEIGHT (LBS.)	OPERATING WEIGHT (LBS.)	REMARKS
HWT-1	RAYPAK	PART NO. 241914 REV. 2 (403526)	DOMESTIC HOT WATER STORAGE	FIRST FLOOR	1	175	33" DIA. X 67.25" L	603	2064	VERTICAL WITH RIGID FOAM AT A MINIMUM R12.9 INSULATION AND COMPLIES TO ASHRAE 90.1. COMPLETE UNIT IS ENCLOSED IN BAKED ENAMEL STEEL JACKET. 2½" NPT CONNECTIONS AND 150 PSI MAXIMUM WORKING PRESSURE.
TET-1	AMTROL ASME THERM-X-TROL	ST-12-C	DOMESTIC HOT WATER EXPANSION	FIRST FLOOR	1	6.4	12" DIA. X 15 5/8" H	26	120	BLADDER (FDA APPROVED), PROVIDE SEISMIC RESTRAINT. SEE DETAIL 10 OF SHEET P-5.1 FOR THERMAL EXPANSION TANK SUPPORT DETAIL.

PUMP SCHEDULE

MARK	MAKE	MODEL	SERVICE	LOCATION	QTY	PERFORMANCE			ELECTRICAL DATA					REMARKS
						GPM	TDH (FT.)	MIN. EFF.	RPM	HP/ WATTS	V	PH	HZ	
RCP-1	GRUNDFOS	UPS 43-44 BFC	DOMESTIC HOT WATER RECIRCULATION	ROOF	1	-	-	-	-	⅙ HP	115	1Ø	60	1) ALL PUMPS TO BE ALL BRONZE. 2) SPEED SETTING 3. 3) PROVIDE WITH TIMER CONTROL AND AQUASTAT. 4) INSTALL THERMAL PURGE VALVE SET TO OPEN AT 160°F CLOSE AT 150°F ON THE DISCHARGE OF THE PUMP AS PROTECTION. 5) PROVIDE RECTORSEAL POLYSLAB PUMP COVER, 25.2" L X 13.4" W X 23.65" W.
DBP-1	GRUNDFOS	CMBE 10-54 I-U-C-E-D-G	BOOSTER PUMP	FIRST FLOOR	1	54.2	82.35	-	3868	2 HP	208	1Ø	60	CME PUMP WITH INTEGRATED FREQUENCY CONVERTER. THE SYSTEM SHALL BE UL QCZJ LISTED AND NSF 61 CERTIFIED LEAD FREE. REFER TO DETAIL 1 OF SHEET P-5.2 FOR DETAILS.

VALVES & MISCELLANEOUS SCHEDULE

MARK	MAKE	MODEL	SERVICE	LOCATION	QTY	TYPE	FLOW GPM/CFH	PIPE SIZE	VALVE SIZE	REMARKS
BFP-1	ZURN WILKINS	375A	DOMESTIC COLD WATER BACKFLOW	ONSITE	1	REDUCED PRESSURE PRINCIPLE ASSEMBLY	51 GPM	3"	3"	3" REDUCED PRESSURE PRINCIPLE ASSEMBLY, DOMESTIC STAINLESS STEEL BODY, LEAD FREE, ASSE LISTED 1013, CSA B64.4, FM, UL & cUL APPROVED. PROVIDE STRAINER WITH HOSE BIBB CONNECTION FOR BLOWOUT.
TMV-1	CASH ACME	HEATGUARD 145LF SERIES	DOMESTIC HOT WATER TEMPERING	BELOW LAVATORY	9	POINT-OF-USE	0.34 MIN - 5.8 MAX	¾"	¾"	POINT-OF-USE THERMOSTATIC MIXING VALVE BELOW LAVATORY SET AT 110°F.
TMV-2	CASH ACME	HG160	DOMESTIC HOT WATER TEMPERING	BELOW SINK	3	POINT-OF-USE	0.34 MIN - 11.0 MAX	¾"	¾"	POINT-OF-USE THERMOSTATIC MIXING VALVE BELOW SINK SET AT 120°F.
TMV-3	CASH ACME	HG160	DOMESTIC HOT WATER TEMPERING	SHOWER	2	POINT-OF-USE	0.34 MIN - 11.0 MAX	¾"	¾"	POINT-OF-USE THERMOSTATIC MIXING VALVE SERVING SHOWERS SET AT 120°F.

PLUMBING EQUIPMENT SCHEDULE

ITEM	FIXTURE/ EQUIPMENT	PIPING CONNECTION				FIXTURE UNITS		DESCRIPTION
		SOIL OR WASTE	VENT	COLD WATER	HOT WATER	WASTE F.U.	COLD WATER F.U.	
WC-1	PUBLIC WATER CLOSET (FLUSH TANK)	3"	2"	¾"	-	4	2.5	VITREOUS CHINA, FLOOR MOUNTED, FLUSH TANK, IAPMO LISTED, 1.28 GPF WATER CLOSET APPROVED BY ARCHITECT. FIXTURE PERFORMANCE SHALL MEET OR EXCEED WITH EPA WATERSENSE AND ASME A112.19.2M
WC-2	PUBLIC WATER CLOSET (ADA) (FLUSH TANK)	4"	2"	¾"	-	4	2.5	VITREOUS CHINA, FLOOR MOUNTED, FLUSH TANK, IAPMO LISTED, 1.28 GPF, ADA COMPLIANT WATER CLOSET APPROVED BY ARCHITECT. FIXTURE PERFORMANCE SHALL MEET OR EXCEED WITH EPA WATERSENSE AND ASME A112.19.2M
L-1	LAVATORY	2"	2"	½"	½"	1	1	VITREOUS CHINA, COUNTER MOUNTED, IAPMO LISTED, 1.2 GPM, PROVIDE TAILPIECE WITH ASME A112.18.9.403.3 CERTIFIED INSULATED COVER, LEAD FREE LAVATORY & FAUCET APPROVED BY OWNER. FIXTURE PERFORMANCE SHALL MEET OR EXCEED ANSI:112.18.1M, EPA WATERSENSE AND LEAD CONTENT REQUIREMENTS OF CALIFORNIA AB 1953.
L-2	PUBLIC LAVATORY (ADA)	2"	2"	½"	½"	1	1	VITREOUS CHINA, WALL MOUNTED, IAPMO LISTED, 0.4 GPM, PROVIDE TAILPIECE WITH INSULATED COVER, LEAD FREE LAVATORY & FAUCET APPROVED BY OWNER. COMPLY WITH ADA REQUIREMENTS FOR ACCESSIBLE AND USABLE BUILDING FACILITIES. FIXTURE PERFORMANCE SHALL MEET OR EXCEED ASME A112.18.1/CSA B125.1 STANDARDS.
SH-1	PUBLIC SHOWER	2"	2"	¾"	¾"	2	2	IAPMO LISTED BATHTUB/SHOWER BY ARCHITECT. 1.8 GPM SHOWERHEAD, APPROVED BY OWNER. SHALL HAVE INDIVIDUAL SHOWER CONTROL VALVE OF THE PRESSURE BALANCE OR THE THERMOSTATIC MIXING VALVE TYPE PER ASSE 1070, SET AT 120°F MAXIMUM. FIXTURE PERFORMANCE SHALL MEET OR EXCEED ASME A112.18.1 / CSA B125.1. ASSE 1016, ICC / ANSI A117.1, EPA WATERSENSE.
SH-2	PUBLIC SHOWER (ADA)	2"	2"	¾"	¾"	2	2	IAPMO LISTED BATHTUB/SHOWER BY ARCHITECT. 1.8 GPM SHOWERHEAD, APPROVED BY OWNER. SHALL HAVE INDIVIDUAL SHOWER CONTROL VALVE OF THE PRESSURE BALANCE OR THE THERMOSTATIC MIXING VALVE TYPE PER ASSE 1070, SET AT 120°F MAXIMUM. COMPLY WITH ADA REQUIREMENTS FOR ACCESSIBLE AND USABLE BUILDING FACILITIES. FIXTURE PERFORMANCE SHALL MEET OR EXCEED ASME A112.18.1 / CSA B125.1. ASSE 1016, ICC / ANSI A117.1, EPA WATERSENSE.
S-1	KITCHEN SINK	2"	2"	¾"	¾"	2	1.5	IAPMO LISTED, SINGLE COMPARTMENT, STAINLESS STEEL, SELF-RIMMING SINK. LEAD FREE, 1.5 GPM MAX FLOWRATE KITCHEN SINK APPROVED BY ARCHITECT. FIXTURE PERFORMANCE SHALL MEET OR EXCEED ANSI:112.18.1M.
DF-1	DRINKING FOUNTAIN	2"	2"	½"	-	1	1	HAWS WALL MOUNTED DRINKING FOUNTAIN MODEL #1501, BARRIER FREE "HI-LO" DUAL WHITE ENAMELED-IRON BASINS, PUSH BUTTON OPERATED VALVES WITH FRONT ACCESSIBLE CARTRIDGE AND FLOW ADJUSTMENT, POLISHED CHROME PLATED VANDAL RESISTANT BUBBLER HEADS, POLISHED CHROME PLATED VANDAL RESISTANT WASTE STRAINERS, VANDAL RESISTANT BOTTOM PLATES, WHITE POWDER COATED STAINLESS STEEL BACK PANEL WITH MATCHING IN-WALL MOUNTING PLATE, AND 1½" IPS MOUNTING STRAPS.
SS-1	SERVICE SINK	3"	2"	¾"	¾"	3	3	SERVICE SINK: AMERICAN STANDARD FLORWELL MODEL #7745.811, ENAMELED CAST IRON, 3" OUTLET, CORNER MODEL. FAUCET: CHICAGO GG FAUCETS MODEL #445-897SRCXKCP, WALL MOUNTED, LEVER HANDLE. PROVIDE WITH INTEGRAL VACUUM BREAKER.
WHA	WATER HAMMER ARRESTOR	-	-	-	-	-	-	PRECISION PLUMBING PRODUCTS WATER HAMMER ARRESTORS, HYDRAULIC DISPLACEMENT, PERMANENTLY SEALED, PISTON OPERATED, SIZED IN ACCORDANCE TO SCHEDULE: MODEL # / FIXTURE UNIT RATING / I.P.S. SC-500 / 1-11 / ½" SC-750 / 12-32 / ¾" SC-100 / 33-60 / 1" SC-1250 / 61-113 / 1½" PROVIDE STAINLESS STEEL ACCESS PANEL IN TILED WALLS & ALL PUBLIC BATHROOMS CONFIRM FINISH OF ALL OTHER ACCESS PANEL WITH ARCHITECT
FD-1	FLOOR DRAIN	2"	2"	½" TPL	-	2	-	J.R SMITH #2005-A DUCO CAST IRON BODY & FLASHING COLLAR WITH PROTECTOR CAP AND 5" ROUND ADJUSTABLE STRAINER HEAD, BOTTOM OUTLET WITH TRAP PRIMER CONNECTION.
FD-2	FLOOR DRAIN (TRASH AREA)	2"	2"	½" TPL	-	2	-	J.R SMITH #2110 Y, MEDIUM DUTY, DUCO CAST IRON BODY & FLASHING COLLAR WITH CAST IRON BAR GRATE AND 8½" ROUND TOPS, BOTTOM OUTLET WITH TRAP PRIMER CONNECTION.
FS-1	FLOOR SINK	2"	2"	½" TPL	-	2	-	FLOOR SINK 12"x12" JAY R. SMITH 3140Y-12 ASSEMBLY WITH HUBLESS ACID RESISTANT ENAMELED CAST IRON RECEPTOR, FLASHING DEVICE, REMOVABLE ALUMINUM BOTTOM STRAINER, OUTLET FITTING WITH TRAP PRIMER CONNECTION AND NICKEL BRONZE RIM AND GRATE WITH 2½" CENTER HOLE VANDALPROOF MOUNTING, CAST IRON "P" TRAP.
TP-1	TRAP PRIMER	-	-	½"	-	-	-	MIFAB MODEL# MR-500-NPB PRESSURE DROP ACTIVATED BRASS TRAP SEAL PRIMER. COMPLETE WITH FOUR VIEW HOLES AND REMOVABLE FILTER SCREEN. SERVES UP TO 8 FLOOR DRAIN TRAPS AND REQUIRES NO ADJUSTMENTS AND NO AIR PRE-CHARGE. PROVIDE STAINLESS STEEL ACCESS PANEL IN TILED WALLS & ALL PUBLIC BATHROOMS, CONFIRM FINISH OF ALL OTHER ACCESS PANELS WITH ARCHITECT.
TP-2	TRAP PRIMER	-	-	½"	-	-	-	SIOUX CHIEF MODEL #695-ES01 ELECTRONIC TRAP PRIMER EQUIPPED WITH SOLENOID ACTUATING DEVICE, VACUUM BREAKER AND PROPER ELECTRICAL HARDWARE. TRAP PRIMER SHALL BE EQUIPPED WITH AN ASSE 1010 WATER HAMMER ARRESTER TO PROTECT SOLENOID DEVICE. PROVIDE WITH SIOUX CHIEF 695-Y52 PRIMING DISTRIBUTOR FOR TRAP PRIMER WITH TWO BRANCHES. PROVIDE STAINLESS STEEL ACCESS PANEL IN TILED WALLS & ALL PUBLIC BATHROOMS, CONFIRM FINISH OF ALL OTHER ACCESS PANELS WITH ARCHITECT. ELECTRICAL REQUIREMENT : CONNECT UNIT TO 120V AC SUPPLY, 9.2 WATTS POWER CONSUMPTION @ 60 HERTZ. REFER TO ELECTRICAL DRAWINGS FOR ELECTRICAL CONSUMPTIONS.
HB-1	HOSE BIBB	-	-	¾"	-	-	2.5	ARROWHEAD BRASS MODEL #351LK NO-KINK HOSEBIBB, LOOSEKEY, ¾" HOST THREAD, ¾"MIP.

PLUMBING EQUIPMENT SCHEDULE NOTES:

1. ALL FIXTURES TO BE WHITE AND TRIM TO BE POLISHED CHROME FINISH UNLESS NOTED OTHERWISE.
2. PROVIDE BASSCRAFT HEAVY PATTERN ANGLE STOPS FOR ALL FIXTURES IN PUBLIC AREAS AND BASSCRAFT SPEEDWAY STOPS AT ALL OTHER LOCATIONS.
3. FIXTURES AND TRIM SHALL BE AS NOTED OR EQUAL, COMPLY WITH CALIFORNIA LEED PLUMBING CODE AND APPROVED BY OWNER.
4. ALL ACCESSIBLE LAVATORIES & SINKS TO BE PROVIDED WITH INSULATION FOR THE DRAIN & HOT WATER PIPING AS TRUEBRO KIT #101 INSULATION KIT OR EQUAL.
5. THE NEW PLUMBING SYSTEM INSTALLATION SHALL COMPLY WITH HIGH EFFICIENCY, LEAD FREE AND GREEN BUILDING CODE.

PLUMBING SCHEDULES

DATE PLOTTED: 5/17/2022 4:43 PM
ORIGINAL SIZE: ARCH FULL BLEED E1 (30.00 X 42.00 INCHES)
BY: JERRY GRAVELA
PLOT SCALE: 1:1
LAST SAVED: JGRAVELA
PLOT STYLE: BREEN DESIGN GROUP.STB
FILE NAME: H:\PROJECTS\138 CORP FOR BETTER HOUSING\24-001 - FRESNO SENIOR CENTER\01 - CAD\SENIOR CENTER PACKAGE\PLUMBING\P-0.2 PLUMBING SCHEDULES.DWG

Y&M Architects
Y&M Architects
255 South Santa Fe Avenue, Suite 103
Los Angeles, CA 90012
Telephone: 213 623 2107
www.ymarch.com

COPYRIGHT ©2024 BREEN DESIGN GROUP

DRAWN BY	LF, AT
DESIGNED BY	JT
CHECKED BY	JT
APPROVED BY	PB

BREEN DESIGN GROUP
3825 DEL AMO BOULEVARD
TORRANCE, CA 90503
PH: 310 464 8404
WWW.BREENDESIGN.COM

REGISTERED PROFESSIONAL ENGINEER JOPER O. TUPAS NO. M-35317 EXP. 06/30/2025

FRESNO SENIOR CENTER

Integrated Community Development

Project. *	Developer. 20750 Ventura Boulevard, Suite 155 Woodland Hills, CA 91364	Project No.: 138-24-001	Scale: NONE	Date 06.11.24	Page P-0.2

WASTE FIXTURE CALCULATIONS

FIXTURE	NUMBER OF FIXTURE	X	FIXTURE UNITS	=	TOTAL WASTE FIXTURE UNITS
COMMERCIAL KITCHEN GREASE WASTE					
HAND SINK	1	X	2.0	=	2.0
SERVICE SINK	1	X	3.0	=	3.0
3-COMPARTMENT SINK	1	X	12.0	=	12.0
FLOOR SINK	5	X	3.0	=	15.0
FLOOR DRAIN	3	X	2.0	=	6.0
			SUB-TOTAL WASTE FIXTURE UNITS	=	38.0
FIRST FLOOR OFFICE SPACE BATHROOM					
WATER CLOSET (FLUSH TANK)	1	X	4.0	=	4.0
LAVATORY	1	X	1.0	=	1.0
			SUB-TOTAL WASTE FIXTURE UNITS	=	5.0
FIRST FLOOR MULTI-USE AREA/LIBRARY BATHROOM					
WATER CLOSET (FLUSH TANK)	2	X	4.0	=	8.0
LAVATORY	2	X	1.0	=	2.0
DRINKING FOUNTAIN	1	X	1.0	=	1.0
			SUB-TOTAL WASTE FIXTURE UNITS	=	11.0
FIRST FLOOR MEN'S AND WOMEN'S LOCKER ROOM					
WATER CLOSET (FLUSH TANK)	8	X	4.0	=	32.0
LAVATORY	6	X	1.0	=	6.0
SHOWER	8	X	2.0	=	16.0
DRINKING FOUNTAIN	1	X	1.0	=	1.0
FLOOR DRAIN	2	X	2.0	=	4.0
			SUB-TOTAL WASTE FIXTURE UNITS	=	59.0
SECOND FLOOR MEN'S PUBLIC BATHROOM (A-213)					
WATER CLOSET (FLUSH TANK)	5	X	4.0	=	20.0
LAVATORY	3	X	1.0	=	3.0
FLOOR DRAIN	1	X	2.0	=	2.0
			SUB-TOTAL WASTE FIXTURE UNITS	=	25.0
SECOND FLOOR WOMEN'S PUBLIC BATHROOM (A-212)					
WATER CLOSET (FLUSH TANK)	5	X	4.0	=	20.0
LAVATORY	3	X	1.0	=	3.0
FLOOR DRAIN	1	X	2.0	=	2.0
			SUB-TOTAL WASTE FIXTURE UNITS	=	25.0
SECOND FLOOR MEN'S PUBLIC BATHROOM (A-205)					
WATER CLOSET (FLUSH TANK)	2	X	4.0	=	8.0
LAVATORY	2	X	1.0	=	2.0
FLOOR DRAIN	1	X	2.0	=	2.0
			SUB-TOTAL WASTE FIXTURE UNITS	=	12.0
SECOND FLOOR WOMEN'S PUBLIC BATHROOM (A-204)					
WATER CLOSET (FLUSH TANK)	2	X	4.0	=	8.0
LAVATORY	2	X	1.0	=	2.0
FLOOR DRAIN	1	X	2.0	=	2.0
			SUB-TOTAL WASTE FIXTURE UNITS	=	12.0
SECOND FLOOR MULTI-USE & ART/SHOP ROOM (A-202, A-206, A-211 & A-216)					
SINK	1	X	2.0	=	2.0
			SUB-TOTAL WASTE FIXTURE UNITS	=	2.0

TOTAL WASTE FIXTURE CALCULATIONS

COMMERCIAL KITCHEN GREASE WASTE	1	X	38.0	=	38.0
FIRST FLOOR OFFICE SPACE BATHROOM	1	X	5.0	=	5.0
FIRST FLOOR GAME ROOM BATHROOM	1	X	11.0	=	11.0
FIRST FLOOR MEN'S AND WOMEN'S LOCKER ROOM	1	X	59.0	=	59.0
SECOND FLOOR MEN'S PUBLIC BATHROOM (A-213)	1	X	25.0	=	25.0
SECOND FLOOR WOMEN'S PUBLIC BATHROOM (A-212)	1	X	25.0	=	25.0
SECOND FLOOR MEN'S PUBLIC BATHROOM (A-205)	1	X	12.0	=	12.0
SECOND FLOOR WOMEN'S PUBLIC BATHROOM (A-204)	1	X	12.0	=	12.0
SECOND FLOOR MULTI-USE & ART/SHOP ROOM (A-202, A-206, A-211 & A-216)	4	X	2.0	=	8.0
			TOTAL WASTE FIXTURE UNITS	=	195.0

COLD WATER FIXTURE CALCULATIONS

FIXTURE	NUMBER OF FIXTURE	X	FIXTURE UNITS	=	TOTAL FIXTURE UNITS
COMMERCIAL KITCHEN					
KITCHEN SINK	1	X	3.0	=	3.0
HAND SINK	1	X	2.0	=	2.0
SERVICE SINK	1	X	3.0	=	3.0
PREP SINK	1	X	3.0	=	3.0
3-COMPARTMENT SINK	1	X	6.0	=	6.0
DISHWASHER	1	X	2.0	=	2.0
ICE MACHINE VALVE BOX	1	X	1.0	=	1.0
			SUB-TOTAL WATER FIXTURE UNITS	=	20.0
FIRST FLOOR OFFICE SPACE BATHROOM					
WATER CLOSET (FLUSH TANK)	1	X	2.5	=	2.5
LAVATORY	1	X	1.0	=	1.0
			SUB-TOTAL WATER FIXTURE UNITS	=	3.5
FIRST FLOOR MULTI-USE AREA/LIBRARY BATHROOM					
WATER CLOSET (FLUSH TANK)	2	X	2.5	=	5.0
LAVATORY	2	X	1.0	=	2.0
DRINKING FOUNTAIN	1	X	1.0	=	1.0
			SUB-TOTAL WATER FIXTURE UNITS	=	8.0
FIRST FLOOR MEN'S AND WOMEN'S LOCKER ROOM					
WATER CLOSET (FLUSH TANK)	8	X	2.5	=	20.0
LAVATORY	6	X	1.0	=	6.0
SHOWER	8	X	2.0	=	16.0
DRINKING FOUNTAIN	1	X	1.0	=	1.0
			SUB-TOTAL WATER FIXTURE UNITS	=	43.0
SECOND FLOOR MEN'S PUBLIC BATHROOM (A-213)					
WATER CLOSET (FLUSH TANK)	5	X	2.5	=	12.5
LAVATORY	3	X	1.0	=	3.0
			SUB-TOTAL WATER FIXTURE UNITS	=	15.5
SECOND FLOOR WOMEN'S PUBLIC BATHROOM (A-212)					
WATER CLOSET (FLUSH TANK)	5	X	2.5	=	12.5
LAVATORY	3	X	1.0	=	3.0
			SUB-TOTAL WATER FIXTURE UNITS	=	15.5
SECOND FLOOR MEN'S PUBLIC BATHROOM (A-205)					
WATER CLOSET (FLUSH TANK)	2	X	2.5	=	5.0
LAVATORY	2	X	1.0	=	2.0
			SUB-TOTAL WATER FIXTURE UNITS	=	7.0
SECOND FLOOR WOMEN'S PUBLIC BATHROOM (A-204)					
WATER CLOSET (FLUSH TANK)	2	X	2.5	=	5.0
LAVATORY	2	X	1.0	=	2.0
			SUB-TOTAL WATER FIXTURE UNITS	=	7.0
SECOND FLOOR MULTI-USE & ART/SHOP ROOM (A-202, A-206, A-211 & A-216)					
SINK	1	X	1.5	=	1.5
			SUB-TOTAL WATER FIXTURE UNITS	=	1.5

TOTAL COLD WATER FIXTURE CALCULATIONS

COMMERCIAL KITCHEN	1	X	20.0	=	20.0
FIRST FLOOR OFFICE SPACE BATHROOM	1	X	3.5	=	3.5
FIRST FLOOR GAME ROOM BATHROOM	1	X	8.0	=	8.0
FIRST FLOOR MEN'S AND WOMEN'S LOCKER ROOM	1	X	43.0	=	43.0
SECOND FLOOR MEN'S PUBLIC BATHROOM (A-213)	1	X	15.5	=	15.5
SECOND FLOOR WOMEN'S PUBLIC BATHROOM (A-212)	1	X	15.5	=	15.5
SECOND FLOOR MEN'S PUBLIC BATHROOM (A-205)	1	X	7.0	=	7.0
SECOND FLOOR WOMEN'S PUBLIC BATHROOM (A-204)	1	X	7.0	=	7.0
SECOND FLOOR MULTI-USE & ART/SHOP ROOM (A-202, A-206, A-211 & A-216)	4	X	1.5	=	6.0
			TOTAL WATER FIXTURE UNITS	=	125.5
			GPM	=	51.0

DOMESTIC HOT WATER DEMAND CALCULATIONS

FIXTURE	NUMBER OF FIXTURE	X	FIXTURE UNITS	=	TOTAL FIXTURE UNITS
COMMERCIAL KITCHEN					
KITCHEN SINK	1	X	15.0	=	15.0
HAND SINK	1	X	10.0	=	10.0
SERVICE SINK	1	X	30.0	=	30.0
PREP SINK	1	X	30.0	=	30.0
3-COMPARTMENT SINK	1	X	60.0	=	60.0
DISHWASHER	1	X	75.0	=	75.0
			SUB-TOTAL HOT WATER DEMAND (GPH)	=	220.0
FIRST FLOOR OFFICE SPACE BATHROOM					
LAVATORY	1	X	6.0	=	6.0
			SUB-TOTAL HOT WATER DEMAND (GPH)	=	6.0
FIRST FLOOR GAME ROOM BATHROOM					
LAVATORY	2	X	6.0	=	12.0
			SUB-TOTAL HOT WATER DEMAND (GPH)	=	12.0
FIRST FLOOR MEN'S AND WOMEN'S LOCKER ROOM					
LAVATORY	6	X	6.0	=	36.0
SHOWER	8	X	30.0	=	240.0
			SUB-TOTAL HOT WATER DEMAND (GPH)	=	276.0
SECOND FLOOR MEN'S PUBLIC BATHROOM (A-213)					
LAVATORY	3	X	6.0	=	18.0
			SUB-TOTAL HOT WATER DEMAND (GPH)	=	18.0
SECOND FLOOR WOMEN'S PUBLIC BATHROOM (A-212)					
LAVATORY	3	X	6.0	=	18.0
			SUB-TOTAL HOT WATER DEMAND (GPH)	=	18.0
SECOND FLOOR MEN'S PUBLIC BATHROOM (A-205)					
LAVATORY	2	X	6.0	=	12.0
			SUB-TOTAL HOT WATER DEMAND (GPH)	=	12.0
SECOND FLOOR WOMEN'S PUBLIC BATHROOM (A-204)					
LAVATORY	2	X	6.0	=	12.0
			SUB-TOTAL HOT WATER DEMAND (GPH)	=	12.0
SECOND FLOOR MULTI-USE & ART/SHOP ROOM (A-202, A-206, A-211 & A-216)					
SINK	1	X	10.0	=	10.0
			SUB-TOTAL HOT WATER DEMAND (GPH)	=	10.0

TOTAL HOT WATER DEMAND CALCULATIONS

COMMERCIAL KITCHEN	1	X	220.0	=	220.0
FIRST FLOOR OFFICE SPACE BATHROOM	1	X	6.0	=	6.0
FIRST FLOOR GAME ROOM BATHROOM	1	X	12.0	=	12.0
FIRST FLOOR MEN'S AND WOMEN'S LOCKER ROOM	1	X	276.0	=	276.0
SECOND FLOOR MEN'S PUBLIC BATHROOM (A-212)	1	X	18.0	=	18.0
SECOND FLOOR WOMEN'S PUBLIC BATHROOM (A-213)	1	X	18.0	=	18.0
SECOND FLOOR MEN'S PUBLIC BATHROOM (A-205)	1	X	12.0	=	12.0
SECOND FLOOR WOMEN'S PUBLIC BATHROOM (A-204)	1	X	12.0	=	12.0
SECOND FLOOR MULTI-USE & ART/SHOP ROOM (A-202, A-206, A-211 & A-216)	4	X	10.0	=	40.0
			TOTAL HOT WATER DEMAND (GPH)	=	614.0

BOILER SYSTEM CALCULATION

TOTAL GPH DEMAND	=	614.0
TOTAL DEMAND IN GALLONS PER HOUR (GPH) WITH DEMAND FACTOR OF 0.3	=	184.2
STORAGE TANK CAPACITY (175 GALLONS), STRATIFICATION FACTOR OF 0.7	=	122.5
MAXIMUM DOMESTIC HOT WATER DEMAND (GPH)	=	61.7
TOTAL MBTUH @ 100% BOILER EFFICIENCY (80°F RISE)	=	41.2
TOTAL MBTUH @ 85% BOILER EFFICIENCY (80°F RISE)	=	48.5
TOTAL MBTUH WITH 60% REDUNDANCY	=	77.6

EQUIPMENT REQUIREMENTS:

ONE (1) - 77.6 MBTUH MINIMUM INPUT AT 80° TEMPERATURE RISE.

ONE (1) - 175 GALLON STORAGE TANK.

HYDRAULIC CALCULATIONS

WATER SYSTEM DEMAND

SYSTEM TYPE: PREDOMINANTLY FLUSH TANK FIXTURES	FIXTURE UNITS	GPM
TOTAL FIXTURE UNITS	125.5	51.0

MAXIMUM FLOW RATE: 51 GPM

LANDSCAPE IRRIGATION SHALL BE 50 GPM (AT OFF HOURS USE)

MAXIMUM PRESSURE	60	P.S.I.
MINIMUM PRESSURE	50	P.S.I.

BOOSTER PUMP CALCULATIONS

BOOSTER PUMP GPM	51.0	GPM
(A) FRICTION LOSS THRU 2" WATER METER AT 51.0 GPM	1.0	P.S.I.
(B) FRICTION LOSS AT REDUCED PRESSURE TYPE BACKFLOW PREVENTER: 3" (51.0 GPM)	13.0	P.S.I.
(C) FRICTION LOSS THRU PIPE FROM METER TO BOOSTER PUMP		
THRU PIPE = 51.0 GPM @ 3"		
CPVC SCH. 80		
VELOCITY = 2.53 FPS		
HEAD LOSS = 0.89 FT/100FT X 0.433 PSI/FT = 0.38 PSI/100 FT X 448 FT	1.7	P.S.I.
TOTAL	15.7	P.S.I.
(D) PRESSURE AVAILABLE (60 PSI MAX. & 50 PSI MIN.)	50.0	P.S.I.
(E) STATIC GAINED = 0' X .433 PSI/FT =	0.0	P.S.I.
TOTAL PRESSURE AVAILABLE = 50.0 + 0.0	50.0	P.S.I.
PRESSURE AVAILABLE ON THE SUCTION SIDE = 50.0 - 15.7 TOTAL	34.3	P.S.I.
(F) RESIDUAL PRESSURE AT MOST REMOTE FIXTURE	30.0	P.S.I.
(G) STATIC HEAD FROM BOOSTER PUMP UP TO MOST REMOTE FIXTURE = 12 FT X 0.433 PSI/FT HD.	5.2	P.S.I.
(H) PRESSURE LOSS THROUGH PIPE FRICTION LOSS FROM BOOSTER PUMP TO HOT WATER AT ROOF TO MOST REMOTE FIXTURE, 443 FT. X 1.25 (FITTING LOSSES) = 554 FT X 5.0 PSI/100FT	27.7	P.S.I.
TOTAL	62.9	P.S.I.
PRESSURE BOOST NEEDED FOR THE PUMP IS = (62.9-34.3)	28.6	P.S.I.
IN FT OF HEAD: 28.6 PSI / 0.433 PSI/FT	66.1	FT.HD

SIZE DOMESTIC BOOSTER PUMP BASED ON 51.0 GPM & 66 FT. OF HEAD

FRICTION LOSS CALCULATION

(FROM BOOSTER PUMP TO THE HYDRAULICALLY MOST REMOTE FIXTURE)

CONSTANT PRESSURE PUMPS SET TO 80 PSI

LOSSES		
RESIDUAL PRESSURE AT FIXTURE	30.0	P.S.I.
STATIC HEAD LOSS FROM BOOSTER PUMP UP TO MOST REMOTE FIXTURE = 12 FT X 0.433 PSI/FT HD.	5.2	P.S.I.
TOTAL LOSSES:	35.2	P.S.I.

MINIMUM PRESSURE AVAILABLE FOR PIPING FRICTION LOSSES: 80.0 - 35.2 = 44.8 P.S.I.

ALLOWABLE FRICTION LOSS PER 100 FT.

ASSUME THE MOST HYDRAULICALLY REMOTE UNIT ON THE SYSTEM (TOTAL LENGTH FROM BOOSTER PUMP TO MOST REMOTE FIXTURE)

MAXIMUM TOTAL DEVELOPED LENGTH: 554 FT. (INCLUDING 25% FOR FITTINGS)

100' OF PIPE: (44.8 X 100) / 554.0 = 8.1 P.S.I.

MAXIMUM ALLOWABLE FRICTION LOSS 8.1 PSI/100 FEET; USE 8.0 PSI/100FT

COLD WATER VELOCITY NOT TO EXCEED 8 F.P.S.

HOT WATER VELOCITY NOT TO EXCEED 5 F.P.S.

(HOT AND COLD WATER)
DISTRIBUTION PIPE SIZING CHART (CPVC)
8.0 PSI/100 FT MAXIMUM FRICTION LOSS
MAXIMUM VELOCITY OF 5 FEET/ SECOND

PIPE SIZE	SDR 11 CPVC						SCHED. 80 CPVC		
	½"	¾"	1"	1¼"	1½"	2"	3"	4"	6"
GPM	2	6	12	21	3	56	100.3	175.4	398.7
FT FU	1	7	16	32	58	155	381	780	2657
FV FU	0	0	0	0	15	63	246	741	2657
VEL	5.0	5.0	5.0	5.0	5.0	5.0	5.0	5.0	5.0

(COLD WATER)
PIPING SIZING CHART (COPPER TYPE "L" - FOR WATER HEATER CONNECTIONS)
8.0 PSI/100 FT MAXIMUM FRICTION LOSS
MAXIMUM VELOCITY OF 8 FEET/ SECOND

PIPE SIZE	½"	¾"	1"	1¼"	1½"	2"	3"	4"	6"
GPM	3	8	16	29	44	76	165	290	669
FT FU	3	10	23	51	103	254	719	1668	5101
VEL	8.0	8.0	8.0	8.0	8.0	8.0	8.0	8.0	8.0

(HOT WATER)
PIPING SIZING CHART (COPPER TYPE "L" - FOR WATER HEATER CONNECTIONS)
8.0 PSI/100 FT MAXIMUM FRICTION LOSS
MAXIMUM VELOCITY OF 5 FEET/ SECOND

PIPE SIZE	½"	¾"	1"	1¼"	1½"	2"	3"	4"	6"
GPM	3	7	12	19	27	48	105	185	418
FT FU	3	8	16	28	46	119	406	840	2842
VEL	5.0	5.0	5.0	5.0	5.0	5.0	5.0	5.0	5.0

WATER PIPE SIZING CHARTS

HOT WATER RETURN PIPING (SDR 11 CPVC)
3.0 PSI/100 FT MAXIMUM FRICTION LOSS
MAXIMUM VELOCITY OF 5 FEET/ SECOND

PIPE SIZE	SDR 11 CPVC LARR# 5697					
	½"	¾"	1"	1¼"	1½"	2"
GPM	1.4	4.1	8.0	13.4	20.9	22.1
VEL	2.5	3.3	3.9	4.5	4.8	5.0

PLUMBING CALCULATIONS

DATE PLOTTED: 5/17/2022 4:43 PM
ORIGINAL SIZE: ARCH FULL BLEED E1 (30.00 X 42.00 INCHES)
BY: JERRY GRAVELA
PLOT SCALE: 1:1
LAST SAVED: JGRAVELA
PLOT STYLE: BREEN DESIGN GROUP.STB
FILE NAME: H:\PROJECTS\138 CORP FOR BETTER HOUSING\24-001 - FRESNO SENIOR CENTER\01 - CAD\SENIOR CENTER PACKAGE\PLUMBING\P-0.3 PLUMBING CALCULATIONS.DWG

Y&M Architects
Y&M Architects
255 South Santa Fe Avenue, Suite 103
Los Angeles, CA 90012
Telephone: 213 623 2107
www.ymarch.com

DRAWN BY	LF, AT
DESIGNED BY	JT
CHECKED BY	JT
APPROVED BY	PB

BREEN DESIGN GROUP
3825 DEL AMO BOULEVARD
TORRANCE, CA 90503
PH: 310 464 8404
WWW.BREENDESIGN.COM

REGISTERED PROFESSIONAL ENGINEER
JOSEPH O. TUPAS
NO. M-35317
EXP. 06/30/2025

COPYRIGHT ©2024 BREEN DESIGN GROUP

FRESNO SENIOR CENTER

Integrated Community Development

Project. *	Developer. 20750 Ventura Boulevard, Suite 155 Woodland Hills, CA 91364	Project No.: 138-24-001	Scale: NONE	Date 06.11.24	Page P-0.3

GENERAL NOTES

1. READ WITH ARCHITECTURAL DRAWINGS FOR EXACT DIMENSIONS.
2. READ WITH CIVIL DRAWINGS.

REFERENCE NOTES

1. WASTE LATERAL, CONNECT TO ONSITE SEWER SYSTEM AS SHOWN ON CIVIL DRAWING.
2. 2" DOMESTIC COLD WATER METER PER CIVIL DRAWINGS.
3. GAS PIPING INTO THE BUILDING. SEE SHEET P-2.1 FOR CONTINUATION.
4. GREASE INTERCEPTOR.
5. 3" REDUCED PRESSURE PRINCIPLE ASSEMBLY BACKFLOW PREVENTER FOR DOMESTIC WATER SERVICE.
6. GAS METER BY GAS COMPANY.

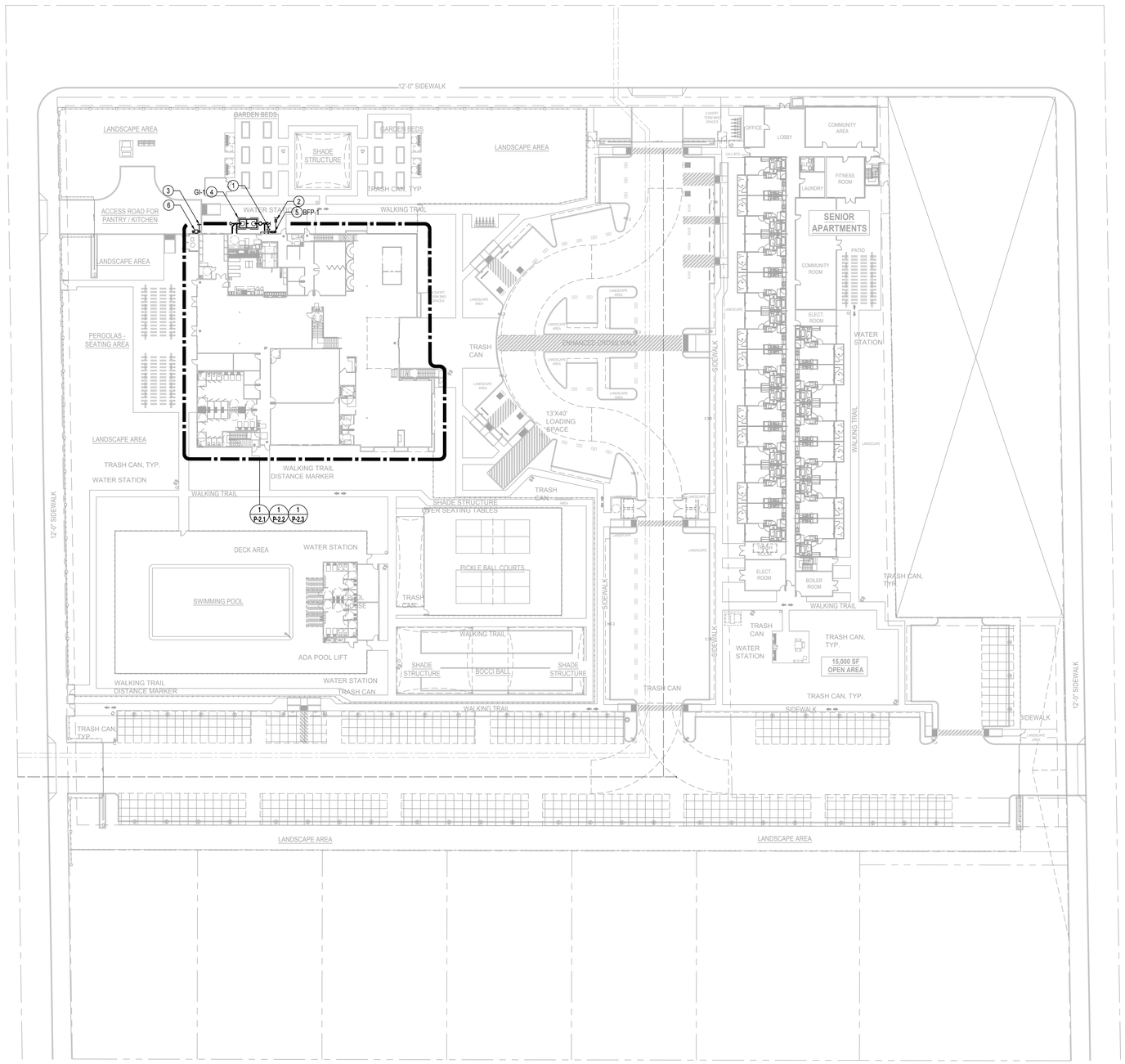

PLUMBING SITE PLAN

N

Y&M Architects

Y&M Architects
255 South Santa Fe Avenue, Suite 103
Los Angeles, CA 90012
Telephone: 213 623 2107
www.ymarch.com

DRAWN BY	LF, AT
DESIGNED BY	JT
CHECKED BY	JT
APPROVED BY	PB

BREEN DESIGN GROUP
3825 DEL AMO BOULEVARD
TORRANCE, CA 90503
PH: 310 464 8404
WWW.BREENDESIGN.COM

REGISTERED PROFESSIONAL ENGINEER
JOSEPH O. TUPAS
NO. M-35317
EXP. 06/30/2025

Integrated Community Development

FRESNO SENIOR CENTER

Project. *	Developer. 20750 Ventura Boulevard, Suite 155 Woodland Hills, CA 91364	Project No.: 138-24-001	Scale: 1" = 30'	Date 06.11.24	Page P-1.0

COPYRIGHT ©2024 BREEN DESIGN GROUP

DATE PLOTTED: 5/17/2022 4:43 PM BY: JERRY GRAVELA LAST SAVED: JGRAVELA FILE NAME: H:\PROJECTS\138 CORP FOR BETTER HOUSING\24-001 - FRESNO SENIOR CENTER\G1 - CAD\SENIOR CENTER PACKAGE\PLUMBING\P-1.0 PLUMBING SITE PLAN.DWG
ORIGINAL SIZE: ARCH FULL BLEED E1 (30.00 X 42.00 INCHES) PLOT SCALE: 1:1 PLOT STYLE: BREEN DESIGN GROUP.STB

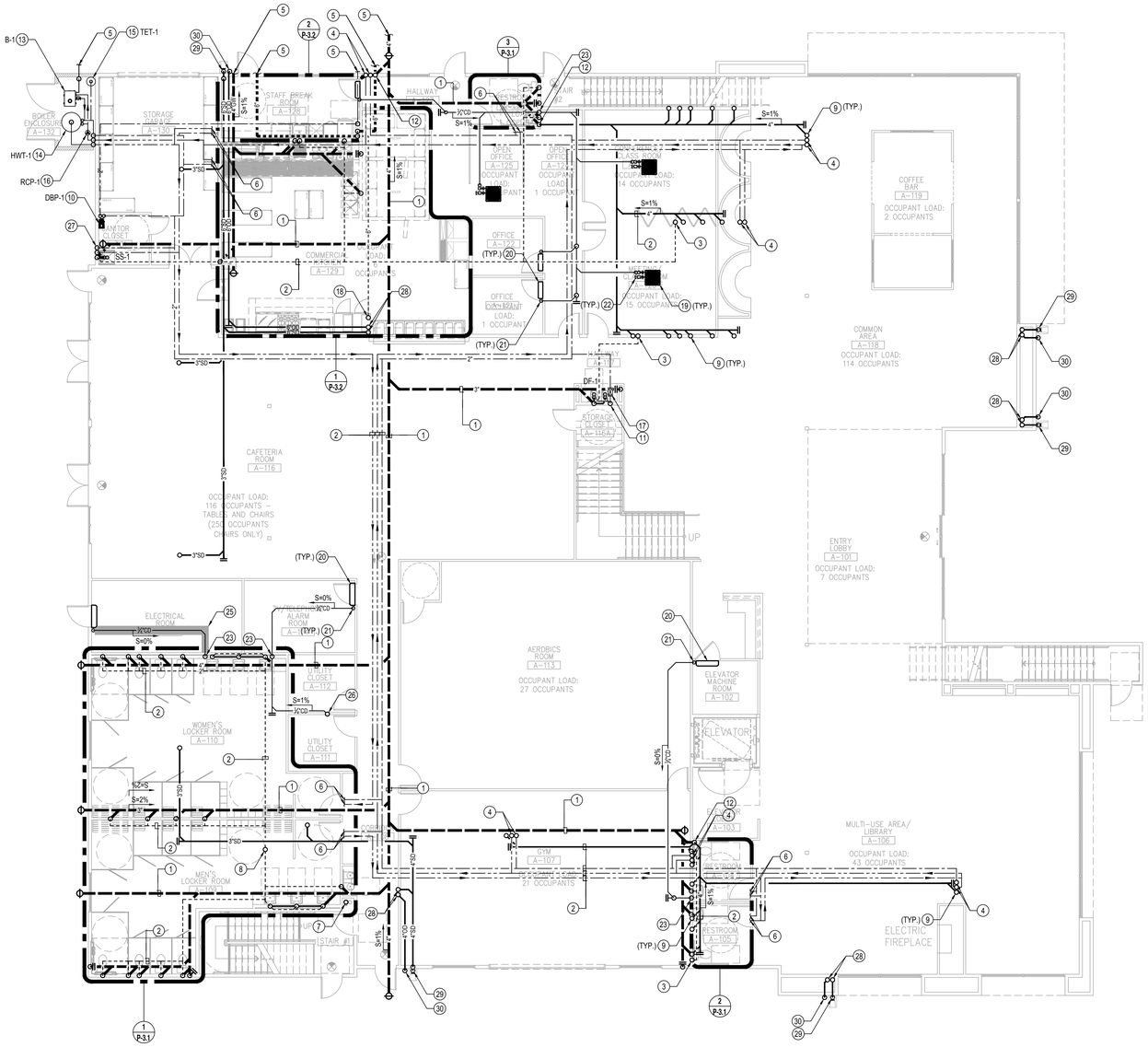

GENERAL NOTES

1. SEE ARCHITECTURAL DRAWINGS FOR EXACT DIMENSIONS.
2. PROVIDE INSULATION FOR TRAPS ON ALL ADA ACCESS FIXTURES.
3. LOWER ROUGH-IN HEIGHTS FOR ALL ADA ACCESS.
4. HOT WATER AND DRAIN PIPES UNDER SINKS SHALL BE INSULATED.
5. USE SOUND ISOLATION BRACKETS FOR WATER PIPING.
6. PROVIDE ANGLE STOPS FOR EACH INDIVIDUAL FIXTURE.
7. READ WITH SCHEMATIC RISER DIAGRAMS.

REFERENCE NOTES

1. PIPING BELOW FLOOR.
2. PIPING AT HIGH LEVEL INSIDE CEILING SPACE.
3. 2" VENT PIPING UP TO FLOOR ABOVE.
4. HOT & COLD WATER PIPING UP TO FLOOR ABOVE TO SUPPLY FIXTURES.
5. SEE PLUMBING SITE PLAN FOR CONTINUATION.
6. SEE PLUMBING ENLARGED PLAN FOR CONTINUATION.
7. FIRE SPRINKLER RISER BY OTHERS.
8. 3" VENT PIPING UP TO FLOOR ABOVE.
9. WASTE PIPING FROM FIXTURE ABOVE.
10. DOMESTIC COLD WATER BOOSTER PUMP. SEE DETAIL 1 OF SHEET P-5.2.
11. ½" COLD WATER DOWN TO SUPPLY DRINKING FOUNTAIN.
12. WASTE PIPING FROM HIGH LEVEL DOWN TO BELOW GRADE.
13. DOMESTIC HOT WATER BOILER. REFER TO DETAIL X OF SHEET P-5.X FOR SCHEMATIC PIPING DIAGRAM.
14. DOMESTIC HOT WATER STORAGE TANK.
15. THERMAL EXPANSION TANK.
16. RECIRCULATION PUMP.
17. COLD WATER SHUT-OFF VALVE AT HIGH LEVEL WITH ACCESS PANEL.
18. 6" GREASE INTERCEPTOR VENT UP TO FLOOR ABOVE.
19. CEILING MOUNTED FAN COIL UNIT. SEE MECHANICAL DRAWINGS.
20. WALL MOUNTED FAN COIL UNIT. SEE MECHANICAL DRAWINGS.
21. ¾" PRIMARY CONDENSATE DRAIN FROM CONDENSATE PUMP BY HVAC.
22. ¾" SECONDARY CONDENSATE DRAIN. PROVIDE WITH OVERFLOW PROTECTION SWITCH.
23. ¾" PRIMARY CONDENSATE DRAIN PIPING DOWN IN WALL TO LAVATORY TAILPIECE. SEE DETAIL 8 OF SHEET P-5.1.
24. ¾" PRIMARY CONDENSATE DRAIN FROM CONDENSATE PUMP BY HVAC UP TO FLOOR ABOVE.
25. PIPING TO BE PROTECTED AND INSTALLED IN ACCORDANCE TO CEC 2019 11026(F)(1)(c).
26. CONDENSATE DRAIN PIPING FROM FLOOR ABOVE.
27. ¾" HOT AND COLD WATER DOWN TO SUPPLY SERVICE SINK.
28. STORM AND OVERFLOW DRAIN PIPING FROM ABOVE.
29. STORM DRAIN PIPING DOWN TO DISCHARGED 6" ABOVE GRADE. PROVIDE WITH SPLASH BLOCK.
30. OVERFLOW DRAIN PIPING TO SPILL DAYLIGHT AT THE EXTERIOR BUILDING WALL.

N

PLUMBING FIRST FLOOR PIPING PLAN

DATE PLOTTED: 5/1/2024 5:04 PM
ORIGINAL SIZE: ARCH FULL BLEED E1 (30.00 X 42.00 INCHES)
BY: JERRY GRAVELA
PLOT SCALE: 1:1
LAST SAVED: JGRAVELA
PLOT STYLE: BREEN DESIGN GROUP.STB
FILE NAME: H:\PROJECTS\138 CORP FOR BETTER HOUSING\24-001 - FRESNO SENIOR CENTER\01 - CAD\SENIOR CENTER PACKAGE\PLUMBING\P-2.1 PLUMBING FIRST FLOOR PIPING PLAN.DWG

Y&M Architects
Y&M Architects
255 South Santa Fe Avenue, Suite 103
Los Angeles, CA 90012
Telephone: 213 623 2107
www.ymarch.com

DRAWN BY	LF, AT
DESIGNED BY	JT
CHECKED BY	JT
APPROVED BY	PB

BREEN DESIGN GROUP
3825 DEL AMO BOULEVARD
TORRANCE, CA 90503
PH: 310 464 8404
WWW.BREENDESIGN.COM

REGISTERED PROFESSIONAL ENGINEER JOSEPH O. TURNER NO. M-35317 EXP. 06/30/2025

COPYRIGHT ©2024 BREEN DESIGN GROUP

FRESNO SENIOR CENTER

Integrated Community Development

Project. *	Developer. 20750 Ventura Boulevard, Suite 155 Woodland Hills, CA 91364	Project No.: 138-24-001	Scale: 1/8" = 1'-0"	Date 06.11.24	Page P-2.1

GENERAL NOTES

1. SEE ARCHITECTURAL DRAWINGS FOR EXACT DIMENSIONS.
2. PROVIDE INSULATION FOR TRAPS ON ALL ADA ACCESS FIXTURES.
3. LOWER ROUGH-IN HEIGHTS FOR ALL ADA ACCESS.
4. HOT WATER AND DRAIN PIPES UNDER SINKS SHALL BE INSULATED.
5. USE SOUND ISOLATION BRACKETS FOR WATER PIPING.
6. PROVIDE ANGLE STOPS FOR EACH INDIVIDUAL FIXTURE.
7. READ WITH SCHEMATIC RISER DIAGRAMS.

REFERENCE NOTES

1. 2" VENT THRU ROOF.
2. 3" VENT THRU ROOF.
3. VENT PIPING FROM BELOW UP TO HIGH LEVEL.
4. PIPING AT HIGH LEVEL INSIDE CEILING SPACE.
5. DOMESTIC HOT & COLD WATER PIPING FROM BELOW.
6. 2" VENT PIPING FROM BELOW UP TO LOW LEVEL INSIDE WALL AND CONNECT TO VENT RISER.
7. FIRE SPRINKLER RISER BY OTHERS.
8. HOT AND COLD WATER FROM BELOW UP TO LOW LEVEL INSIDE TO SUPPLY SINK. PROVIDE HOT AND COLD WATER SHUT-OFF VALVE AT VERTICAL PIPE. PROVIDE WITH ACCESS PANEL.
9. POINT-OF-USE THERMOSTATIC MIXING VALVE BELOW SINK, SET AT 120°F.
10. 6" GREASE INTERCEPTOR VENT FROM BELOW UP THRU ROOF.
11. WALL MOUNTED FAN COIL UNIT. SEE MECHANICAL DRAWINGS.
12. ¾" PRIMARY CONDENSATE DRAIN PIPING FROM WALL MOUNTED FAN COIL UNIT DOWN TO BELOW.
13. ¾" CONDENSATE DRAIN PIPING FROM ABOVE DOWN IN WALL TO LAVATORY/SINK TAILPIECE. SEE DETAIL 8 OF SHEET P-5.1.
14. 1" CONDENSATE DRAIN PIPING FROM ABOVE DOWN IN WALL TO LAVATORY/SINK TAILPIECE. SEE DETAIL 8 OF SHEET P-5.1.
15. 3" STORM & OVERFLOW DRAIN PIPING FROM ABOVE.
16. 4" STORM & OVERFLOW DRAIN PIPING FROM ABOVE.
17. 4" STORM & OVERFLOW DRAIN DOWN TO FLOOR BELOW.
18. 6" STORM & OVERFLOW DRAIN DOWN TO FLOOR BELOW.

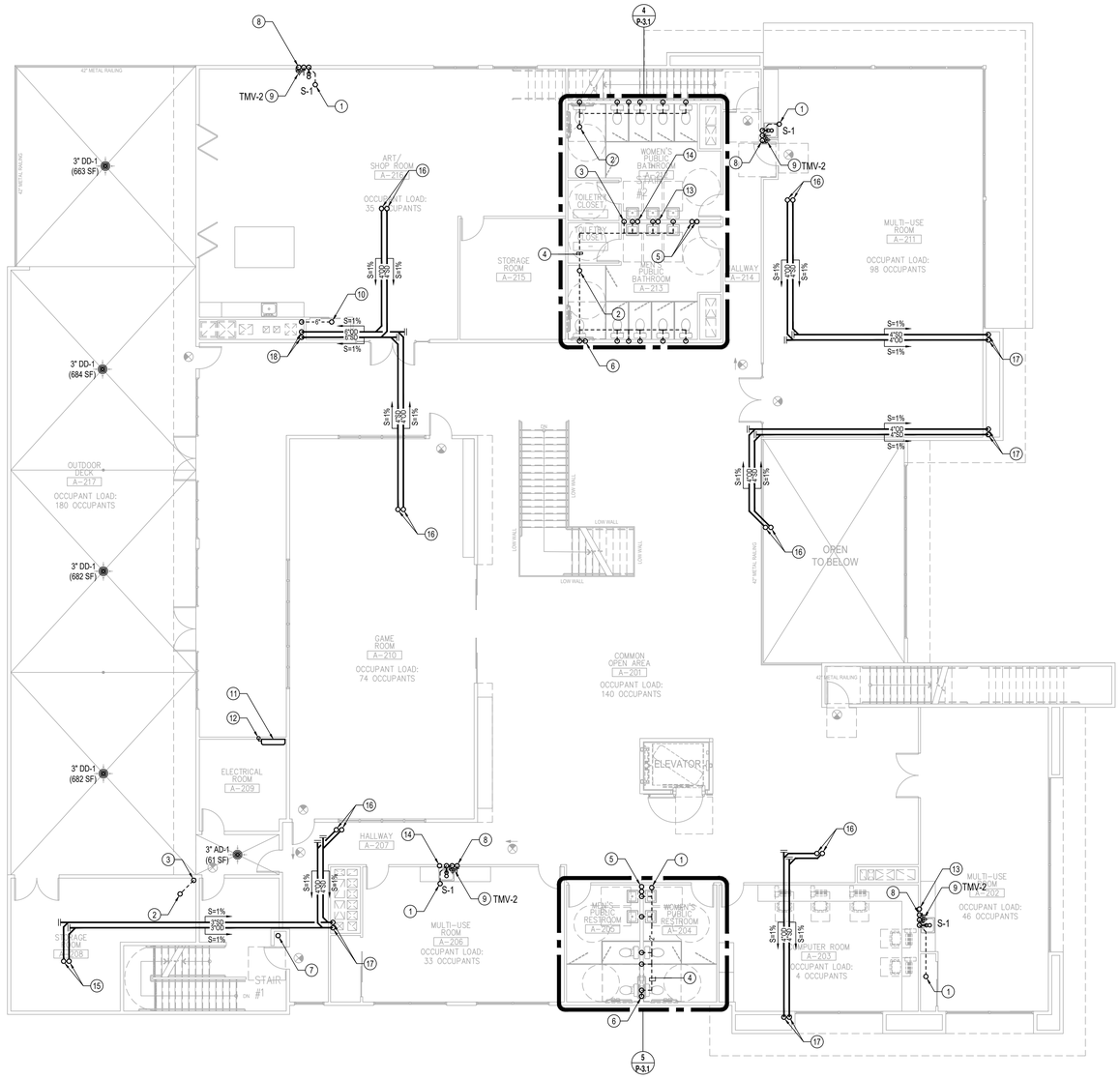

PLUMBING SECOND FLOOR PIPING PLAN

DATE PLOTTED: 5/17/2022 4:43 PM BY: CHRIS WADE
ORIGINAL SIZE: ARCH FULL BLEED E1 (30.00 X 42.00 INCHES) PLOT SCALE: 1:1
LAST SAVED: JGRAVELA
PLOT STYLE: BREEN DESIGN GROUP.STB
FILE NAME: H:\PROJECTS\138 CORP FOR BETTER HOUSING\24-001 - FRESNO SENIOR CENTER\01 - CAD\SENIOR CENTER PACKAGE\PLUMBING\P-2.2 PLUMBING SECOND FLOOR PIPING PLAN.DWG

Y&M Architects
Y&M Architects
255 South Santa Fe Avenue, Suite 103
Los Angeles, CA 90012
Telephone: 213 623 2107
www.ymarch.com

COPYRIGHT ©2024 BREEN DESIGN GROUP

DRAWN BY	LF, AT
DESIGNED BY	JT
CHECKED BY	JT
APPROVED BY	PB

BREEN DESIGN GROUP
3825 DEL AMO BOULEVARD
TORRANCE, CA 90503
PH: 310 464 8404
WWW.BREENDESIGN.COM

REGISTERED PROFESSIONAL ENGINEER JOPER O. TUPAS NO. M-35317 EXP. 06/30/2025

FRESNO SENIOR CENTER

Integrated Community Development

Project. *	Developer. 20750 Ventura Boulevard, Suite 155 Woodland Hills, CA 91364	Project No.: 138-24-001	Scale: 1/8" = 1'-0"	06.11.24 Date	P-2.2 Page

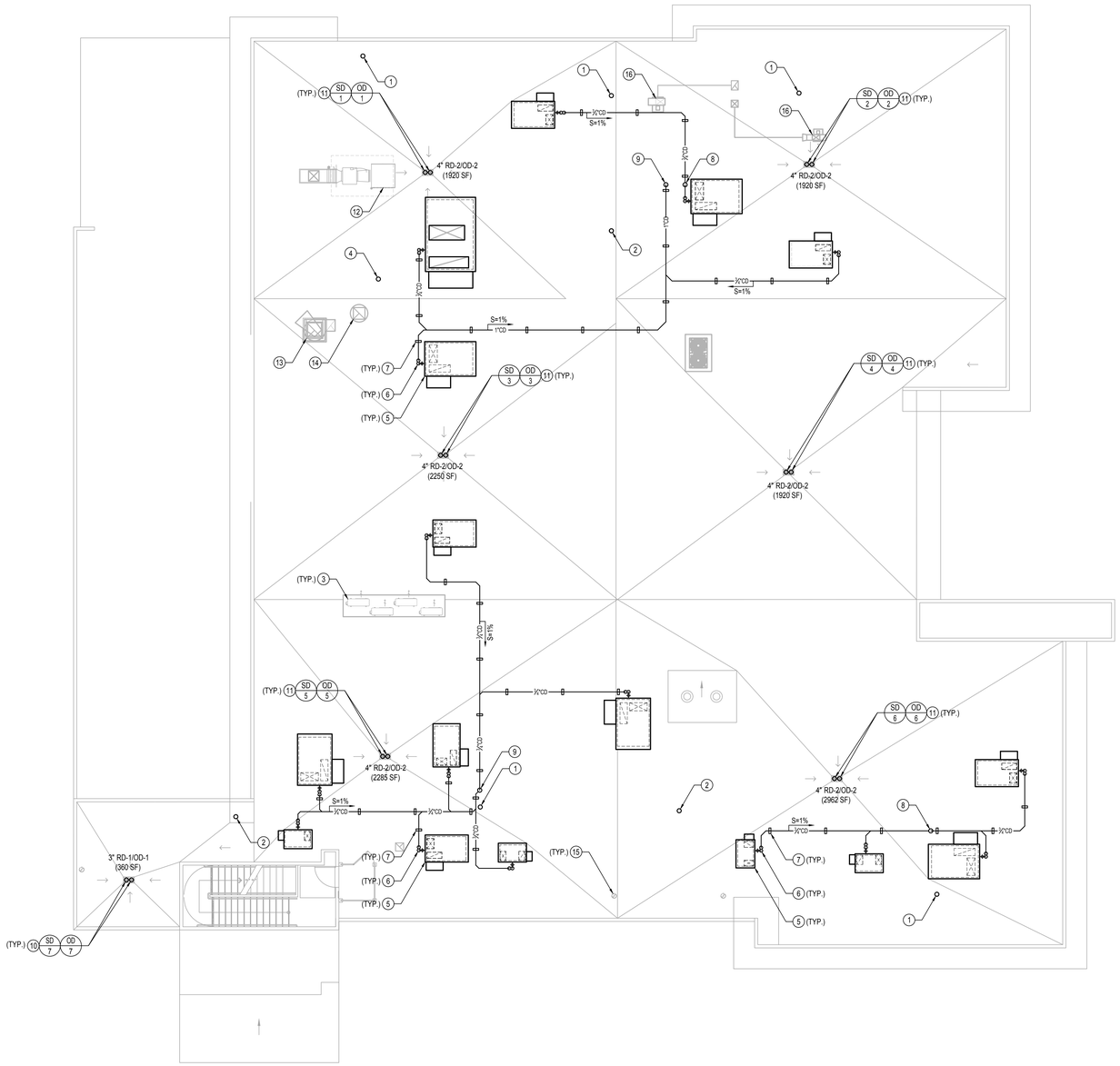

GENERAL NOTES

1. SEE ARCHITECTURAL DRAWINGS FOR EXACT DIMENSIONS.
2. PROVIDE INSULATION FOR TRAPS ON ALL ADA ACCESS FIXTURES.
3. LOWER ROUGH-IN HEIGHTS FOR ALL ADA ACCESS.
4. HOT WATER AND DRAIN PIPES UNDER SINKS SHALL BE INSULATED.
5. USE SOUND ISOLATION BRACKETS FOR WATER PIPING.
6. PROVIDE ANGLE STOPS FOR EACH INDIVIDUAL FIXTURE.
7. READ WITH SCHEMATIC RISER DIAGRAMS.

REFERENCE NOTES

1. 2" VENT THRU ROOF.
2. 3" VENT THRU ROOF.
3. CONDENSING UNITS. SEE MECHANICAL DRAWINGS.
4. 6" GREASE INTERCEPTOR VENT THRU ROOF.
5. MECHANICAL ROOFTOP PACKAGED UNIT. SEE MECHANICAL DRAWINGS.
6. ¾" CONDENSATE DRAIN FROM AC UNIT WITH CONDENSATE TRAP & VENT. REFER TO DETAIL 2 OF SHEET P-5.2.
7. PROVIDE ROOF PIPE SUPPORT EVERY 8-0" ON CENTER. SEE DETAIL 3 OF SHEET P-5.2.
8. ¾" CONDENSATE DRAIN PIPING DOWN TO FLOOR BELOW.
9. 1" CONDENSATE DRAIN PIPING DOWN TO FLOOR BELOW.
10. 3" STORM & OVERFLOW DRAIN DOWN TO FLOOR BELOW.
11. 4" STORM & OVERFLOW DRAIN DOWN TO FLOOR BELOW.
12. SWAMP COOLER FOR KITCHEN HOOD MAKE-UP AIR. SEE MECHANICAL DRAWINGS.
13. KITCHEN EXHAUST FAN. SEE MECHANICAL DRAWINGS.
14. CEILING MOUNTED INLINE EXHAUST AIR FAN. SEE MECHANICAL DRAWINGS.
15. EXHAUST AIR DUCT. SEE MECHANICAL DRAWINGS.
16. ROOF MOUNTED UTILITY SUPPLY/EXHAUST FAN. SEE MECHANICAL DRAWINGS.

N

PLUMBING ROOF PLAN

DATE PLOTTED: 5/2/2024 12:37 AM
ORIGINAL SIZE: ARCH FULL BLEED E1 (30.00 X 42.00 INCHES)
BY: JERRY GRAVELA
PLOT SCALE: 1:1
LAST SAVED: JGRAVELA
PLOT STYLE: BREEN DESIGN GROUP.STB
FILE NAME: H:\PROJECTS\138 CORP FOR BETTER HOUSING\24-001 - FRESNO SENIOR CENTER\G1 - CAD\SENIOR CENTER PACKAGE\PLUMBING\P-2.3 PLUMBING ROOF PLAN.DWG

Y&M Architects
Y&M Architects
255 South Santa Fe Avenue, Suite 103
Los Angeles, CA 90012
Telephone: 213 623 2107
www.ymarch.com

DRAWN BY	LF, AT
DESIGNED BY	JT
CHECKED BY	JT
APPROVED BY	PB

BREEN DESIGN GROUP
3825 DEL AMO BOULEVARD
TORRANCE, CA 90503
PH: 310 464 8404
WWW.BREENDESIGN.COM

REGISTERED PROFESSIONAL ENGINEER
JOSEPH O. UPAS
NO. M-35317
EXP. 06/30/2025

COPYRIGHT ©2024 BREEN DESIGN GROUP

FRESNO SENIOR CENTER

Integrated Community Development

Project. *	Developer. 20750 Ventura Boulevard, Suite 155 Woodland Hills, CA 91364	Project No.: 138-24-001	Scale: 1/8" = 1'-0"	Date 06.11.24	Page P-2.3

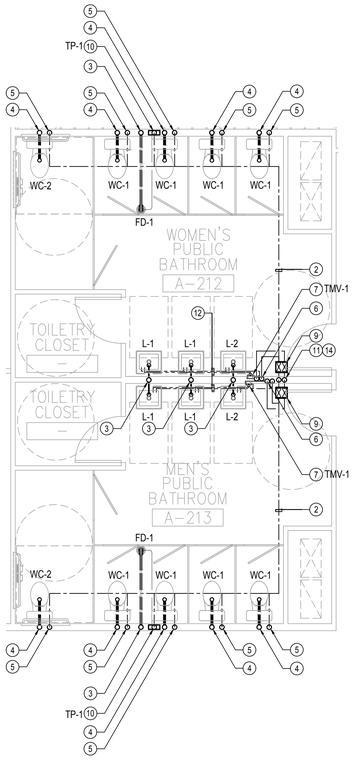

SECOND FLOOR PUBLIC BATHROOM (A-213, A-212) - ENLARGED PLAN | SCALE: 1/4" = 1'-0" | 4

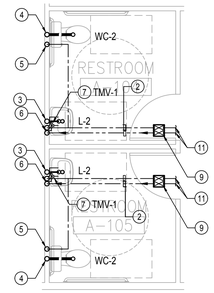

FIRST FLOOR PUBLIC BATHROOM (A-116, A-117, A-118, A-119) - ENLARGED PLAN | SCALE: 1/4" = 1'-0" | 2

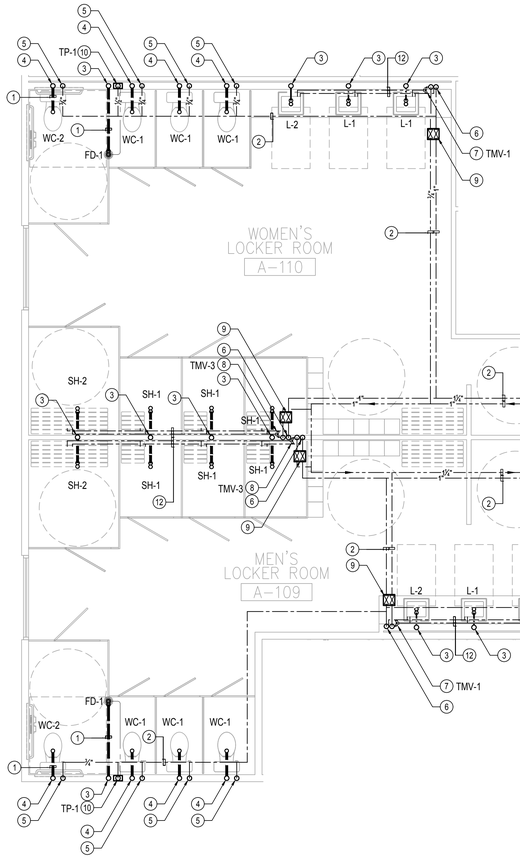

MEN'S & WOMEN'S LOCKER ROOM (FIRST FLOOR) - ENLARGED PLAN | SCALE: 1/4" = 1'-0" | 1

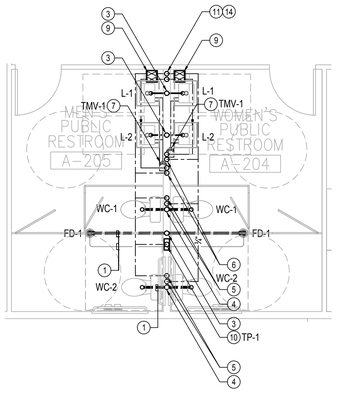

SECOND FLOOR PUBLIC BATHROOM (A-204, A-205) - ENLARGED PLAN | SCALE: 1/4" = 1'-0" | 5

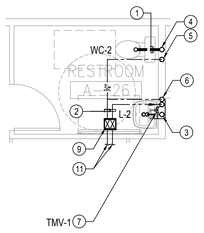

FIRST FLOOR PUBLIC BATHROOM (A-127) - ENLARGED PLAN | SCALE: 1/4" = 1'-0" | 3

GENERAL NOTES

1. USE SOUND ISOLATION BRACKETS FOR WATER PIPING.
2. PROVIDE INSULATION FOR TRAPS ON ALL ADA ACCESS FIXTURES.
3. PROVIDE ANGLE STOPS FOR EACH INDIVIDUAL FIXTURE.
4. SEE ARCHITECTURAL DRAWINGS FOR EXACT DIMENSIONS.
5. SEE WASTE & VENT, GAS, HOT & COLD WATER PIPING RISER DIAGRAMS.
6. CONNECT VENTS IN ROOF ATTIC SPACE & VERIFY EXACT LOCATIONS OF ROOF PENETRATIONS WITH ARCHITECT.
7. CONNECT VENTS IN ROOF ATTIC SPACE & VERIFY EXACT LOCATIONS OF ROOF PENETRATIONS WITH ARCHITECT.

REFERENCE NOTES

1. PIPING BELOW FLOOR.
2. PIPING AT HIGH LEVEL INSIDE CEILING SPACE.
3. 2" WASTE DOWN, 2" VENT UP.
4. 3" WASTE DOWN, 2" VENT UP.
5. ¾" COLD WATER DOWN TO WATER CLOSET.
6. ¾" HOT & COLD WATER DOWN TO SUPPLY FIXTURES.
7. POINT-OF-USE THERMOSTATIC MIXING VALVE BELOW LAVATORY, SET AT 110°F.
8. POINT-OF-USE THERMOSTATIC MIXING VALVE SERVING SHOWER SET AT 120°F.
9. HOT & COLD WATER SHUT-OFF VALVE IN CEILING SPACE. PROVIDE WITH ACCESS PANEL.
10. ½" COLD WATER DOWN TO TRAP PRIMER. RUN ½" COPPER LINE BELOW FLOOR FROM TRAP PRIMER TO FLOOR DRAIN TAILPIECE.
11. SEE PLUMBING SHEET P-2.1 FOR CONTINUATION.
12. PIPING AT LOW LEVEL INSIDE WALL/BELOW COUNTER.
13. ½" COLD WATER DOWN TO DRINKING FOUNTAIN.
14. HOT AND COLD WATER PIPING FROM BELOW.

PLUMBING ENLARGED PLANS - SHEET ONE

FILE NAME: H:\PROJECTS\138 CORP FOR BETTER HOUSING\24-001 - FRESNO SENIOR CENTER\01 - CAD\SENIOR CENTER PACKAGE\PLUMBING\P-3.1 PLUMBING ENLARGED PLANS - SHEET ONE.DWG
LAST SAVED: JGRAVELA
PLOT STYLE: BREEN DESIGN GROUP.STB
BY: JERRY GRAVELA
PLOT SCALE: 1:1
DATE PLOTTED: 5/17/2022 4:43 PM
ORIGINAL SIZE: ARCH FULL BLEED E1 (30.00 X 42.00 INCHES)

Y&M Architects
Y&M Architects
255 South Santa Fe Avenue, Suite 103
Los Angeles, CA 90012
Telephone: 213 623 2107
www.ymarch.com

DRAWN BY	LF, AT
DESIGNED BY	JT
CHECKED BY	JT
APPROVED BY	PB

BREEN DESIGN GROUP
3825 DEL AMO BOULEVARD
TORRANCE, CA 90503
PH: 310 464 8404
WWW.BREENDESIGN.COM

REGISTERED PROFESSIONAL ENGINEER
JOSEPH O. UPAS
NO. M-35317
EXP. 06/30/2025

COPYRIGHT ©2024 BREEN DESIGN GROUP

FRESNO SENIOR CENTER

Integrated Community Development

Project. *

Developer. 20750 Ventura Boulevard, Suite 155
Woodland Hills, CA 91364

Project No.: 138-24-001 | Scale: AS NOTED | Date: 06.11.24 | Page: P-3.1

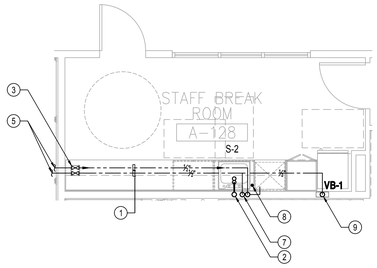

STAFF BREAK ROOM (FIRST FLOOR) - ENLARGED PLAN SCALE: 1/4" = 1'-0" (2)

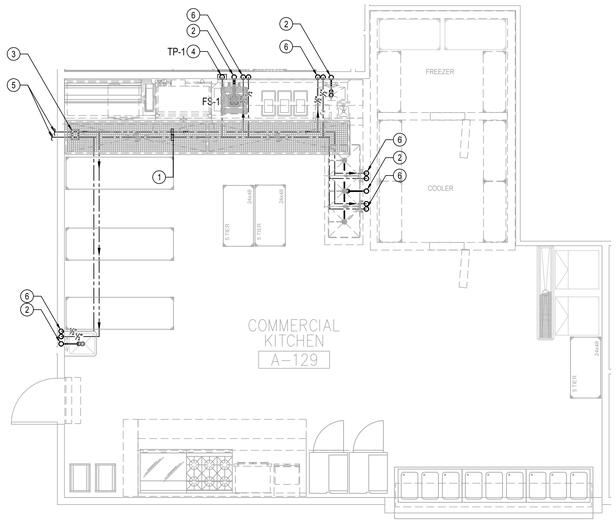

COMMERCIAL KITCHEN (FIRST FLOOR) - ENLARGED PLAN SCALE: 1/4" = 1'-0" (1)

GENERAL NOTES

1. USE SOUND ISOLATION BRACKETS FOR WATER PIPING.
2. PROVIDE INSULATION FOR TRAPS ON ALL ADA ACCESS FIXTURES.
3. PROVIDE ANGLE STOPS FOR EACH INDIVIDUAL FIXTURE.
4. SEE ARCHITECTURAL DRAWINGS FOR EXACT DIMENSIONS.
5. SEE SCHEMATIC RISER DIAGRAMS.
6. CONNECT VENTS IN ROOF ATTIC SPACE & VERIFY EXACT LOCATIONS OF ROOF PENETRATIONS WITH ARCHITECT.
7. LOWER ROUGH-IN HEIGHTS FOR ALL ADA & ADAPTABLE KITCHENS.

REFERENCE NOTES

1. PIPING AT HIGH LEVEL INSIDE CEILING SPACE.
2. 2" WASTE DOWN, 2" VENT UP.
3. HOT & COLD WATER SHUT-OFF VALVE IN CEILING SPACE. PROVIDE WITH ACCESS PANEL.
4. ½" COLD WATER DOWN TO TRAP PRIMER. RUN ½" COPPER LINE BELOW FLOOR FROM TRAP PRIMER TO FLOOR DRAIN TAILPIECE.
5. SEE PLUMBING SHEET P-2.1 FOR CONTINUATION.
6. ¾" HOT & COLD WATER DOWN TO SINK.
7. ¾" HOT WATER DOWN TO SINK AND DISHWASHER. ¾" COLD WATER DOWN TO SINK.
8. DISHWASHER AIR GAP FITTING.
9. ¾" COLD WATER DOWN TO REFRIGERATOR. PROVIDE REFRIGERATOR WITH STOP INSIDE VALVE BOX FLUSHED ON WALL.

PLUMBING ENLARGED PLANS - SHEET TWO

DATE PLOTTED: 5/17/2022 4:43 PM
ORIGINAL SIZE: ARCH FULL BLEED E1 (30.00 X 42.00 INCHES)
BY: JERRY GRAVELA
PLOT SCALE: 1:1
LAST SAVED: JGRAVELA
PLOT STYLE: BREEN DESIGN GROUP.STB
FILE NAME: H:\PROJECTS\138 CORP FOR BETTER HOUSING\24-001 - FRESNO SENIOR CENTER\G1 - CAD\SENIOR CENTER PACKAGE\PLUMBING\P-3.2 PLUMBING ENLARGED PLANS - SHEET TWO.DWG

Y&M Architects
Y&M Architects
255 South Santa Fe Avenue, Suite 103
Los Angeles, CA 90012
Telephone: 213 623 2107
www.ymarch.com

DRAWN BY	LF, AT
DESIGNED BY	JT
CHECKED BY	JT
APPROVED BY	PB

BREEN DESIGN GROUP
3825 DEL AMO BOULEVARD
TORRANCE, CA 90503
PH: 310 464 8404
WWW.BREENDESIGN.COM

REGISTERED PROFESSIONAL ENGINEER JOSEPH O. LOPEZ NO. M-35317 EXP. 06/30/2025

COPYRIGHT ©2024 BREEN DESIGN GROUP

FRESNO SENIOR CENTER

Integrated Community Development

Project. *

Developer. 20750 Ventura Boulevard, Suite 155
Woodland Hills, CA 91364

Project No.: 138-24-001 Scale: AS NOTED Date 06.11.24 Page P-3.2

REFERENCE NOTES

1. PROVIDE SEISMIC RESTRAINT METAL STRAPS.
2. AQUASTAT.
3. TEMPERATURE & PRESSURE RELIEF VALVE DRAIN TO APPROVED LOCATION.
4. COLD WATER MAKE-UP.
5. HOT WATER TO FIXTURE & HYDRONIC FAN COILS.
6. SPILL TO GRADE.
7. THERMAL PURGE VALVE.
8. RECIRCULATING PUMP TO BE LOCATED AWAY FROM BUILDING AND SUPPORTS SHOULD NOT BE ATTACHED TO BUILDING WALL. SEE DETAIL 11 OF THIS SHEET FOR CONTROL WIRING DIAGRAM.
9. BOILER TO BE SET @ 120°F.

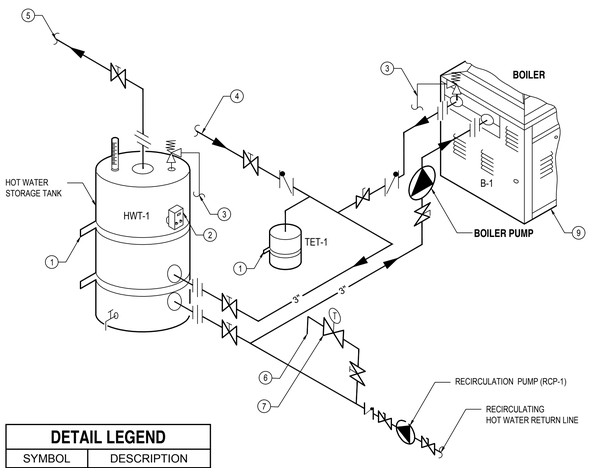

DETAIL LEGEND

SYMBOL	DESCRIPTION
	PRESSURE RELIEF VALVE
	PUMP
	UNION
	GATE VALVE
	CHECK VALVE
	BALL VALVE
	THERMAL PURGE VALVE
	THERMOMETER

DOMESTIC HOT WATER BOILER PIPING SCHEMATIC DETAIL (11)

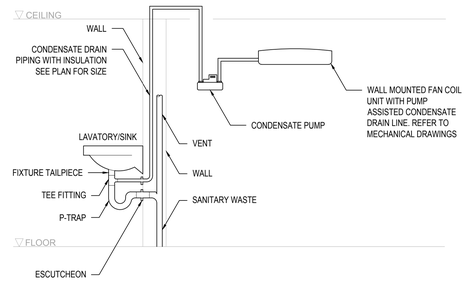

WALL MOUNTED FCU CONDENSATE DRAIN DETAIL (9)

GENERAL NOTES

1. TRAP PRIMER VALVE SHOULD BE MOUNTED ONE FOOT ABOVE FINISHED FLOOR FOR EVERY 20 FEET OF PRIMER LINE.
2. PROVIDE MOUNTING BRACKETS AS REQUIRED.

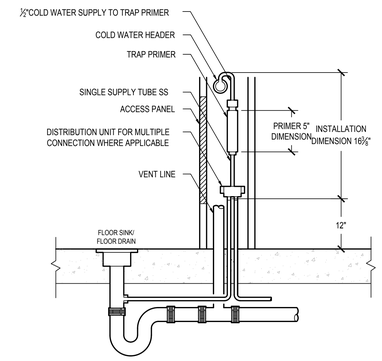

TRAP PRIMER INSTALLATION DETAIL (6)

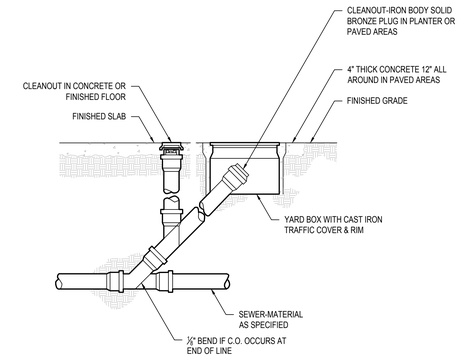

CLEANOUT TO GRADE (3)

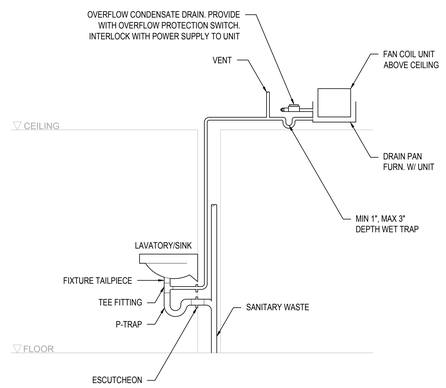

CEILING MOUNTED FAN COIL UNIT CONDENSATE DRAIN DETAIL (8)

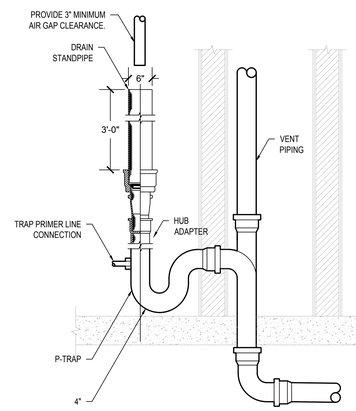

HUB DRAIN AND STANDPIPE (5)

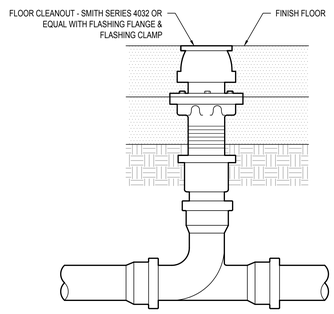

FLOOR CLEANOUT DETAIL (2)

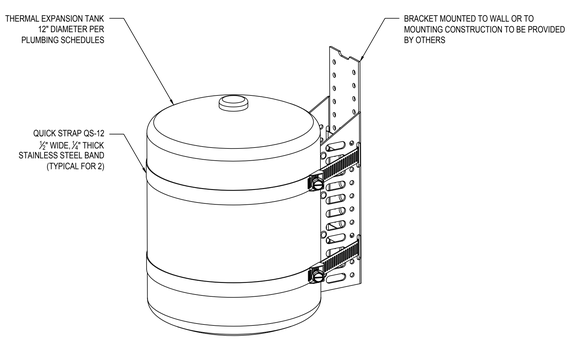

THERMAL EXPANSION TANK SUPPORT DETAIL (10)

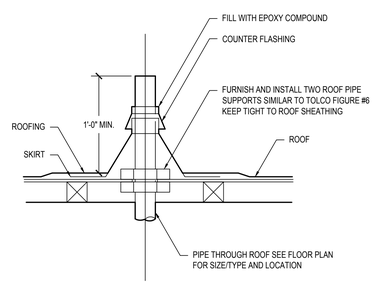

SANITARY VENT PIPE THROUGH ROOF DETAIL (7)

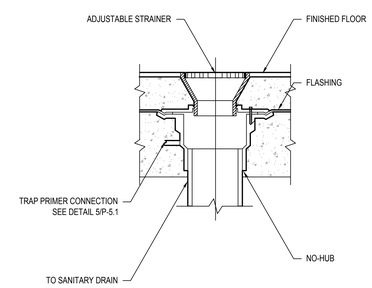

FLOOR DRAIN DETAIL (4)

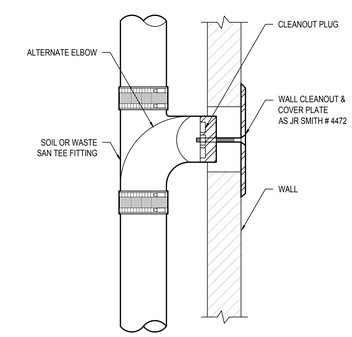

WALL CLEANOUT DETAIL (1)

PLUMBING DETAILS - SHEET ONE

FILE NAME: H:\PROJECTS\T-8 CORP FOR BETTER HOUSING\24-001 - FRESNO SENIOR CENTER\01 - CAD\SENIOR CENTER PACKAGE\PLUMBING\P-5.1 PLUMBING DETAILS - SHEET ONE.DWG
LAST SAVED: JGRAVELA
PLOT STYLE: BREEN DESIGN GROUP.STB
BY: JERRY.GRAVELA
PLOT SCALE: 1:1
ORIGINAL SIZE: ARCH FULL BLEED E1 (30.00 X 42.00 INCHES)
DATE PLOTTED: 5/17/2022 4:43 PM

Y&M Architects

Y&M Architects
255 South Santa Fe Avenue, Suite 103
Los Angeles, CA 90012
Telephone: 213 623 2107
www.ymarch.com

DRAWN BY	LF, AT
DESIGNED BY	JT
CHECKED BY	JT
APPROVED BY	PB

BREEN DESIGN GROUP
3825 DEL AMO BOULEVARD
TORRANCE, CA 90503
PH: 310 464 8404
WWW.BREENDESIGN.COM

REGISTERED PROFESSIONAL ENGINEER JAMES O. TUPAS NO. M-35317 EXP. 06/30/2025

FRESNO SENIOR CENTER

Integrated Community Development

Project. *	Developer. 20750 Ventura Boulevard, Suite 155 Woodland Hills, CA 91364	Project No.: 138-24-001	Scale: N.T.S.	Date 06.11.24	Page P-5.1

COPYRIGHT ©2024 BREEN DESIGN GROUP

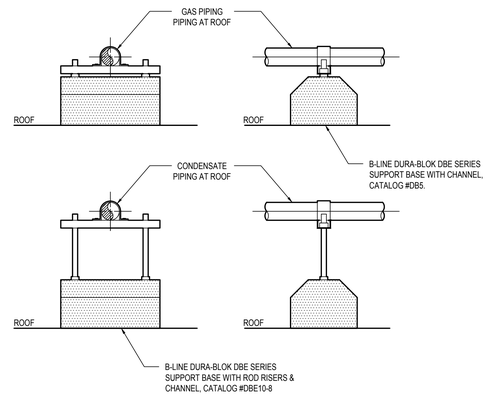

ROOFTOP PIPE SUPPORT DETAIL 3

GENERAL NOTES:

1. ALL INTERIOR CONDENSATE PIPING TO BE INSULATED.

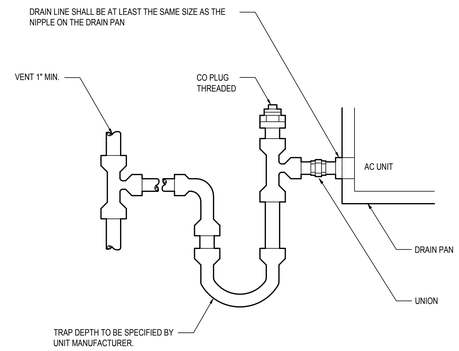

CONDENSATE PIPING TRAP DETAIL 2

Submittal Data

PROJECT:	UNIT TAG:	QUANTITY:
	TYPE OF SERVICE:	
REPRESENTATIVE:	SUBMITTED BY:	DATE:
ENGINEER:	APPROVED BY:	DATE:
CONTRACTOR:	ORDER NO.:	DATE:

Note! Product picture may differ from actual product

CMBE 10-54 I-U-C-E-D-G

CMBE is a high-efficiency compact booster suitable for clean water supply and pressure boosting in domestic and light commercial applications. It keeps constant pressure via the integrated speed control.

Conditions of Service	
Liquid:	Water
Temperature:	68 °F
Specific Gravity:	1.000

Pump Data	
Liquid temperature range:	32 .. 140 °F
Maximum ambient temperature:	131 °F
Shaft seal:	AQQE
Product number:	98548118

Motor Data	
Mains frequency:	60 Hz
Enclosure class:	IP55

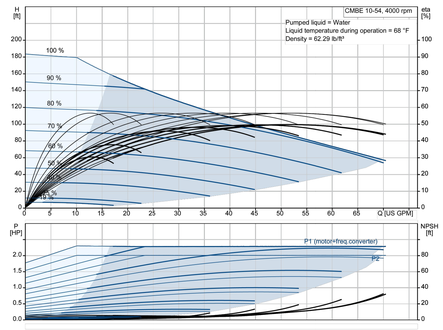

1

GRUNDFOS

Company name:	
Created by:	
Phone:	
Date:	27/03/2024

Qty.	Description
1	**CMBE 10-54 I-U-C-E-D-G**

Note! Product picture may differ from actual product

Product No.: 98548118

The Grundfos CMBE booster is a compact booster system for water supply in domestic applications.
The integrated speed controller enables the CMBE booster to keep constant pressure in the pipe system.
A pressure sensor monitoring changes in the water consumption signals the speed controller to change motor speed to adapt performance to the new state.
The CMBE booster is very easy to install. When the system has been connected to the pipes, it is all a matter of inserting the plug into a power supply socket, and the system is operational.
The CMBE booster consists of the following:
• CME pump with integrated frequency converter
• Five-way valve
• expansion tank
• pressure gauge

The Grundfos CMBE booster requires no external motor protection.
The MGE motor incorporates thermal protection against slow overloading and blocking (IEC 34.11: TP 211).

The Grundfos CMBE booster is mainly used for domestic and light commercial water supply or booster systems.

NB:
Suction lift: maximum 1 m, including inlet pipe pressure loss at a liquid temperature of 20 °C (not self-priming).

Controls:

Type of connector:	No plug
Frequency converter:	Built-in

Liquid:

Pumped liquid:	Water
Liquid temperature range:	32 .. 140 °F
Selected liquid temperature:	68 °F
Density:	62.29 lb/ft³

Technical:

Pump speed on which pump data are based:	3868 rpm
Rated flow:	54.2 US GPM
Rated head:	82.35 ft
Code for shaft seal:	AQQE
Approvals:	cULus
Approvals for drinking water:	CULUS DW NSF61
Curve tolerance:	ISO9906:2012 3B
Return valve:	YES
Start pressure:	Integrated Frequency converter
Tank volume:	0.528 gal

Materials:

Pump housing:	Stainless steel

Printed from Grundfos Product Centre [2024.12.007] 3

DOMESTIC COLD WATER BOOSTER PUMP DETAIL 1

PLUMBING DETAILS - SHEET TWO

DATE PLOTTED: 5/17/2022 4:43 PM BY: JERRY GRAVELA LAST SAVED: JGRAVELA FILE NAME: H:\PROJECTS\138 CORP FOR BETTER HOUSING\24-001 - FRESNO SENIOR CENTER\01 - CAD\SENIOR CENTER PACKAGE\PLUMBING\P-5.2 PLUMBING DETAILS - SHEET TWO.DWG
ORIGINAL SIZE: ARCH FULL BLEED E1 (30.00 X 42.00 INCHES) PLOT SCALE: 1:1 PLOT STYLE: BREEN DESIGN GROUP.STB

Y&M Architects
Y&M Architects
255 South Santa Fe Avenue, Suite 103
Los Angeles, CA 90012
Telephone: 213 623 2107
www.ymarch.com

DRAWN BY	LF, AT
DESIGNED BY	JT
CHECKED BY	JT
APPROVED BY	PB

BREEN DESIGN GROUP
3825 DEL AMO BOULEVARD
TORRANCE, CA 90503
PH: 310 464 8404
WWW.BREENDESIGN.COM

REGISTERED PROFESSIONAL ENGINEER JAPER O. TUPAS NO. M-35317 EXP. 06/30/2025

COPYRIGHT ©2024 BREEN DESIGN GROUP

FRESNO SENIOR CENTER

Integrated Community Development

Project. *	Developer. 20750 Ventura Boulevard, Suite 155 Woodland Hills, CA 91364	Project No.: 138-24-001	Scale: N.T.S.	Date 06.11.24	Page P-5.2

SYMBOLS & NOTATIONS

- INDICATES WOOD-FRAMED WALL BELOW (& ABOVE FOR FOUNDATION PLAN)
- INDICATES WOOD-FRAMED WALL ABOVE
- INDICATE PLYWOOD SHEAR WALL TYPE AND LENGTH PER TYP. DETAILS AND SHEET S1.40 (#F-#F)
- INDICATES EXTENT OF WOOD JOIST
- INDICATES SPAN DIRECTION OF WOOD JOIST
- INDICATES WOOD POST SIZE PER SCHEDULE
- INDICATES REQ'D HOLDOWN AT POST WHERE OCCURS
- INDICATES STEEL POST
- HDR — INDICATES HEADER PER TYPICAL DETAILS U.N.O.
- D-# — INDICATES COLLECTOR SIZE PER SCHEDULE SEE 5 & 17/S1.50
- X'-X" — INDICATES COLLECTOR LENGTH FROM WALLS INSTALL EQUAL LENGTH ON WALL AND BLK'G OR BM, U.N.O.
- INDICATES CHANGE IN SLAB OR ROOF ELEVATION
- S —— S — INDICATES STEPPED FOOTING PER 15/S1.10
- INDICATES PLANTER W/ MAX. WEIGHT OF 60 PSF, SEE ARCH & LANDSCAPE DWGS.

SHEET NOTES:

1. SEE SHEET S0.01 AND S0.02 FOR GENERAL NOTES.
2. SEE SHEETS S1.10, S1.20, S1.30, S1.40, S1.50 AND S1.60 FOR TYPICAL DETAILS.
3. GENERAL NOTES AND TYPICAL DETAILS APPLY TO ALL PARTS OF WORK EXCEPT WHERE SPECIFICALLY DETAILED OR UNLESS NOTED OTHERWISE.
4. U.N.O. EXTERIOR, CORRIDOR AND ELEVATOR STUD WALLS SHALL BE 2x6 @ 16" O.C.
5. FOR ALL INTERIOR STUD WALLS SEE ARCHITECTURAL DRAWINGS, 2x4 @ 16" O.C. MINIMUM U.N.O.
6. PLYWOOD ROOF SHEATHING: 3/4" STR-1 PLWD. (PANEL IDENTIFICATION INDEX 32/16) NAILED WITH 10d COMMONS SPACED AT 4" O.C. ALONG BOUNDARIES (B.N.) AND 6" ALONG PANEL EDGES (E.N.) AND 12" O.C. ALONG INTERMEDIATE SUPPORTS (FIELD) (F.N.), BLOCK ALL PANEL EDGES, SEE TYP. DETAILS. DIAPHRAGM NAILING TO BE INSPECTED BEFORE COVERING. ADD AN ADDITIONAL 1/2" STR-1 PLYWOOD ABOVE STRUCTURAL PLYWOOD NAILED WITH 8d COMMONS AT 12" B.N. E.N. & F.N. (THIS ADDITIONAL LAYER IS NOT PART OF THE STRUCTURAL DIAPHRAGM).
7. FLOOR CONSTRUCTION: 3/4" MAX. GYPCRETE TOPPING OVER 3/4" STR-1 PLWD. (PANEL IDENTIFICATION INDEX 32/16) NAILED WITH 10d COMMONS SPACED AT 2 1/2" O.C. ALONG ALL BOUNDARIES (B.N.) AND 4" ALONG PANEL EDGES (E.N.) AND 12" O.C. ALONG INTERMEDIATE SUPPORTS (FIELD) (F.N.), BLOCK ALL PANEL EDGES, SEE TYP. DETAILS. DIAPHRAGM NAILING TO BE INSPECTED BEFORE COVERING.
8. U.N.O. MINIMUM POST SIZE SHALL BE 4x DEPTH OF WALL.
9. FOR ALL DIMENSIONS, SEE ARCHITECTURAL DRAWINGS.
10. ALL HOLDOWNS SHALL BE TIGHTENED JUST PRIOR TO COVERING WALL HOLDOWN HARDWARE MUST BE SECURED IN PLACE PRIOR TO FOUNDATION INSPECTION.
11. FOR MINIMUM POST SIZE AT ENDS OF SHEAR WALL, REFER TO HOLDOWN SCHEDULE ON TYPICAL DETAILS.
12. ALL BOLTS IN WOOD SHALL BE A-307 STANDARD BOLTS. HOLES SHALL NOT BE MORE THAN 1/16" LARGER THAN THE BOLT DIAMETER. PROVIDE PLATE WASHERS AT ALL BOLTS. INSPECTOR TO VERIFY.
13. PLYWOOD WALL SHEATHING: AT ALL EXTERIOR WALLS OTHER THAN SHEAR WALL, 1/2" STR-1 PLYWOOD NAILED WITH 8d COMMONS SPACED AT 6" O.C. ALONG ALL PANEL EDGES (E.N.) AND 12" O.C. ALONG INTERMEDIATE SUPPORTS (FIELD) (F.N.)
14. FRAMING CONTRACTOR TO COORDINATE LAYOUT WITH ALL APPLICABLE TRADES INCLUDING PLUMBING, MECHANICAL AND ELECTRICAL.
15. FLOOR/ROOF SHEATHING BOUNDARY NAILING REQUIRED AT FULL LENGTH OF SHEAR WALLS, ALL BLK'G W/ STEEL STRAPS AND COLLECTOR BEAMS, U.N.O., SEE 5 & 6/S1.50.
16. PROVIDE FLOOR/ROOF SHEATHING BOUNDARY NAILING AND A35/LTP4 BETWEEN CONT. RIM JOIST/BLK'G AND CONT. TOP PLATES TO END OF WALL LINE W/ SPACING PER SHEAR WALL SCHEDULE ACCORDING TO ADJACENT SHEAR WALL DESIGNATION, U.N.O., SEE SHEET S1.40.
17. SEE PLAN AND TYPICAL DETAILS FOR CONCRETE SLAB ON GRADE INFO.
18. REFER TO ARCHITECTURAL, MECHANICAL, ELECTRICAL, PLUMBING AND CIVIL DRAWINGS FOR VERIFICATION OF ALL DIMENSIONS, ELEVATIONS, SLAB EDGES, SLAB DEPRESSIONS, SLAB OPENING, CURBS, FOOTING PENETRATIONS, SLAB PENETRATIONS, WALL OPENINGS AND EQUIPMENT PAD. NOTIFY ENGINEER WHEN ANY DISCREPANCY IS ENCOUNTERED.
19. REFER TO SOILS REPORT FOR ALL SUB-GRADE REQUIREMENTS.
20. TOP OF FOOTING ELEVATION SHALL BE 1'-0" BELOW TOP OF SLAB ELEVATION, TYPICAL UNLESS NOTED OTHERWISE.
21. GEOTECHNICAL/SOILS ENGINEER SHALL INSPECT AND APPROVE THE FOUNDATION EXCAVATION PRIOR TO REQUESTING A BUILDING DEPARTMENT FOUNDATION INSPECTION.

POST SCHEDULE

MARK	POST SIZE	MATERIAL
P-1	4x4	DF #1
P-2	4x6	DF #1
P-3	4x8	DF #1
P-4	6x6	DF #1
P-5	6x8	DF #1
P-6	3 1/2" x 3 1/2"	PSL 1.8E
P-7	3 1/2" x 5 1/4"	PSL 1.8E
P-8	3 1/2" x 7"	PSL 1.8E
P-9	5 1/4" x 5 1/4"	PSL 1.8E
P-10	5 1/4" x 7"	PSL 1.8E

HEADER BEAM SCHEDULE

MARK	BEAM SIZE	MATERIAL
HDR-1	6 x 10	DF #1
HDR-2	5 1/4" x 11 7/8"	PSL 2.0E
HDR-3	5 1/4" x 18"	PSL 2.0E

TYP. LOAD BEARING WALL STUD SCHEDULE (MIN. U.N.O.)

WALL / FLOOR	EXTERIOR WALL	INTERIOR WALL SINGLE STUD	INTERIOR WALL DOUBLE STUDS
SECOND FLOOR	2x6 @ 12" O.C.	2x @ 16" O.C.	2x @ 16" O.C. EACH SIDE (STAGGERED)
GROUND FLOOR	2x6 @ 16" O.C.	2x @ 16" O.C.	2x @ 8" O.C. EACH SIDE (STAGGERED)

NOTES:

1. SEE GENERAL NOTES FOR LUMBER GRADES.
2. INTERIOR NON-BEARING AND NON-SHEAR WALLS SHALL BE FRAMED WITH 2x4 @ 16" O.C.
3. SEE ARCHI. PLAN FOR LOCATIONS OF STAGGERED WALLS.

WOOD BEAM SCHEDULE

MARK	BEAM SIZE	MATERIAL
B-1	4 x 6	DF #1
B-2	6 x 6	DF #1
B-3	4 x 10	DF #1
B-4	6 x 10	DF #1
B-5	4 x 12	DF #1
B-6	6 x 12	DF #1
B-7	3 1/2" x 9 1/4"	PARALLAM PSL
B-8	5 1/4" x 9 1/4"	PARALLAM PSL
B-9	3 1/2" x 11 7/8"	PARALLAM PSL
B-10	5 1/4" x 11 7/8"	PARALLAM PSL
B-11	7" x 11 7/8"	PARALLAM PSL
B-13	3 1/2" x 14"	PARALLAM PSL
B-14	5 1/4" x 14"	PARALLAM PSL
B-15	7" x 14"	PARALLAM PSL
B-16	3 1/2" x 16"	PARALLAM PSL
B-17	5 1/4" x 16"	PARALLAM PSL
B-18	7" x 16"	PARALLAM PSL
B-19	3 1/2" x 18"	PARALLAM PSL
B-20	5 1/4" x 18"	PARALLAM PSL
B-21	7" x 18"	PARALLAM PSL

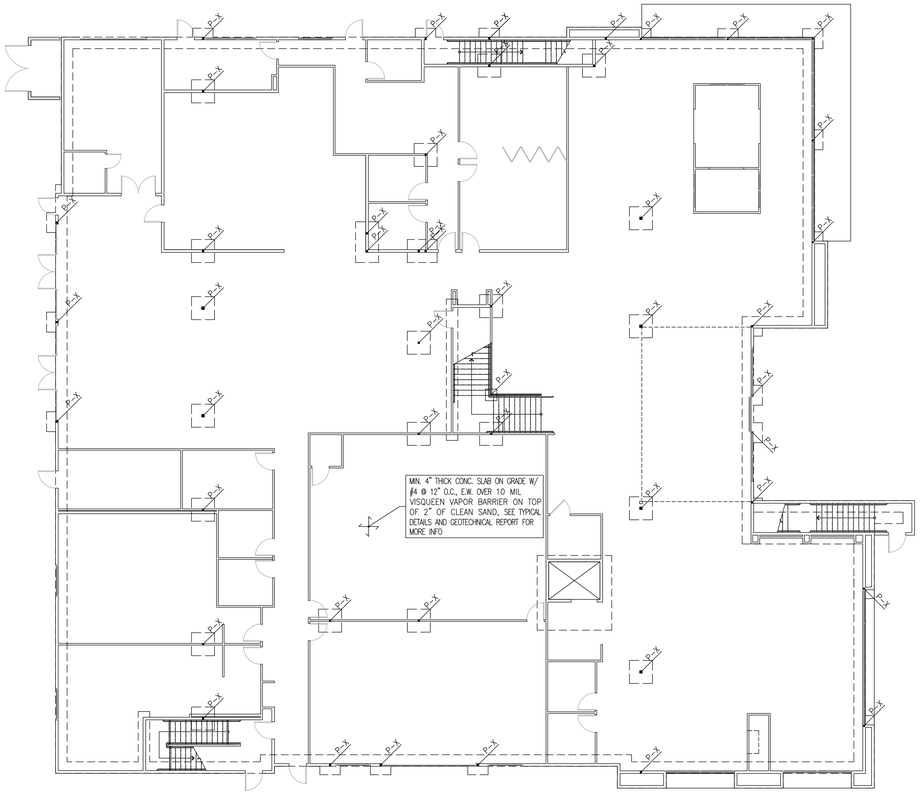

MAIN BLDG FOUNDATION PLAN

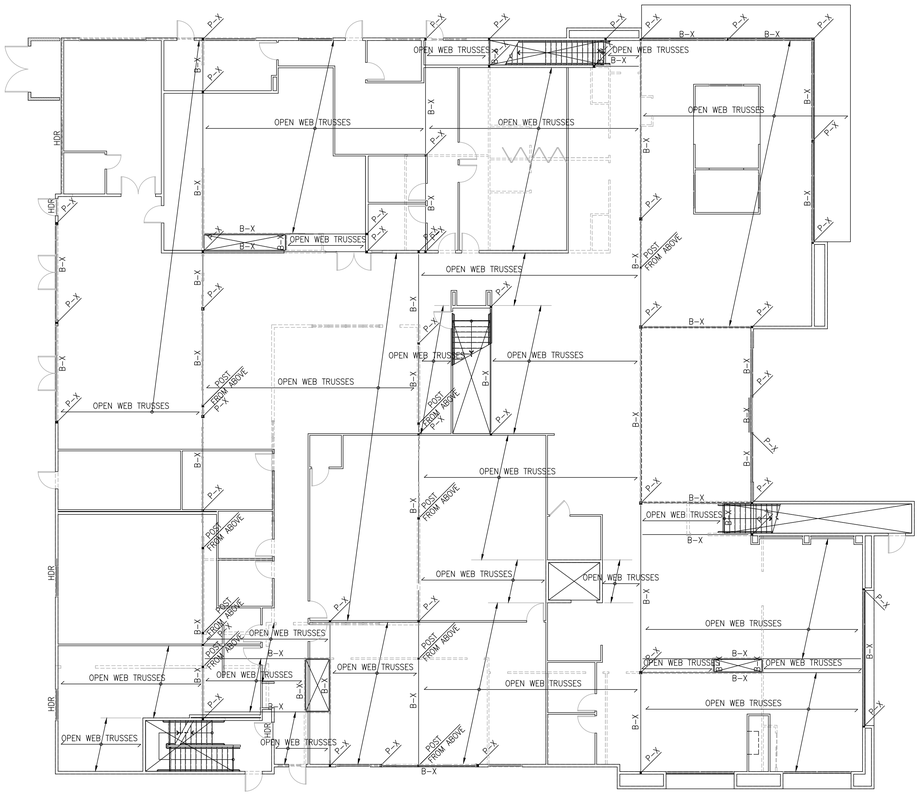

MAIN BLDG SECOND FLOOR FRAMING PLAN

The above drawings, specifications, ideas, designs and arrangements represented thereby are and shall remain property of the Architect (YM Architects), and no part thereof shall be copied, disclosed to others or used in connection with any other project other than the specific project for which they have been prepared and developed, without the written consent of the Architect (YM Architects). Visual contact with these drawings or specifications shall constitute conclusive evidence of acceptance of these restrictions. Written dimensions on these drawings shall have pre-over scaled dimensions. Contractors shall verify and be responsible for all dimensions and conditions on the job, and this office must be notified of any variations from the dimensions and conditions shown by these drawings. Shop details must be submitted to this office for approval before proceeding with fabrication.

Y&M Architects

Y&M Architects
255 S. Santa Fe Ave, Suite 103
Los Angeles, CA 90012
Tel. 213 623 2107 Fax. 213 623 2108
www.ymarch.com

BREEN DESIGN GROUP
3825 DEL AMO BOULEVARD
TORRANCE, CA 90503
PH: 310 464 8404
WWW.BREENDESIGN.COM

REGISTERED PROFESSIONAL ENGINEER DAVID C. LEE NO. S5881 EXP. 6-30-25 STRUCTURAL STATE OF CALIFORNIA

FRESNO SENIOR CENTER

Project. *

Integrated Community Development

Developer. 21031 Ventura Boulevard, Suite 200
Woodland Hills, CA 91364

06.11.24 — Date

S2.10 — Page

H:\PROJECTS\138 CORP FOR BETTER HOUSING\24-001 - FRESNO SENIOR CENTER\01 - CAD\STRUCTURAL\S2.10-S2.20 STRUCTURAL PLAN.DWG
6/11/2024 10:59 AM

SYMBOLS & NOTATIONS

- INDICATES WOOD-FRAMED WALL BELOW (& ABOVE FOR FOUNDATION PLAN)
- INDICATES WOOD-FRAMED WALL ABOVE
- INDICATE PLYWOOD SHEAR WALL TYPE AND LENGTH PER TYP. DETAILS AND SHEET S1.40 (#-#)
- INDICATES EXTENT OF WOOD JOIST
- INDICATES SPAN DIRECTION OF WOOD JOIST
- INDICATES WOOD POST SIZE PER SCHEDULE
- INDICATES REQ'D HOLDOWN AT POST WHERE OCCURS
- INDICATES STEEL POST
- HDR — INDICATES HEADER PER TYPICAL DETAILS U.N.O.
- D-# — INDICATES COLLECTOR SIZE PER SCHEDULE SEE 5 & 17/S1.50
- X'-X" — INDICATES COLLECTOR LENGTH FROM WALLS INSTALL EQUAL LENGTH ON WALL AND BLK'G OR BM, U.N.O.
- INDICATES CHANGE IN SLAB OR ROOF ELEVATION
- S —— S — INDICATES STEPPED FOOTING PER 15/S1.10
- INDICATES PLANTER W/ MAX. WEIGHT OF 60 PSF, SEE ARCH & LANDSCAPE DWGS.

SHEET NOTES:

1. SEE SHEET S0.01 AND S0.02 FOR GENERAL NOTES.
2. SEE SHEETS S1.10, S1.20, S1.30, S1.40, S1.50 AND S1.60 FOR TYPICAL DETAILS.
3. GENERAL NOTES AND TYPICAL DETAILS APPLY TO ALL PARTS OF WORK EXCEPT WHERE SPECIFICALLY DETAILED OR UNLESS NOTED OTHERWISE.
4. U.N.O. EXTERIOR, CORRIDOR AND ELEVATOR STUD WALLS SHALL BE 2x6 @ 16" O.C.
5. FOR ALL INTERIOR STUD WALLS SEE ARCHITECTURAL DRAWINGS, 2x4 @ 16" O.C. MINIMUM U.N.O.
6. PLYWOOD ROOF SHEATHING: 3/4" STR-1 PLWD. (PANEL IDENTIFICATION INDEX 32/16) NAILED WITH 10d COMMONS SPACED AT 4" O.C. ALONG BOUNDARIES (B.N.) AND 6" ALONG PANEL EDGES (E.N.) AND 12" O.C. ALONG INTERMEDIATE SUPPORTS (FIELD) (F.N.), BLOCK ALL PANEL EDGES, SEE TYP. DETAILS. DIAPHRAGM NAILING TO BE INSPECTED BEFORE COVERING. ADD AN ADDITIONAL 1/2" STR-1 PLYWOOD ABOVE STRUCTURAL PLYWOOD NAILED WITH 8d COMMONS AT 12" B.N. E.N. & F.N. (THIS ADDITIONAL LAYER IS NOT PART OF THE STRUCTURAL DIAPHRAGM).
7. FLOOR CONSTRUCTION: 3/4" MAX. CYPCRETE TOPPING OVER 3/4" STR-1 PLWD. (PANEL IDENTIFICATION INDEX 32/16) NAILED WITH 10d COMMONS SPACED AT 2 1/2" O.C. ALONG ALL BOUNDARIES (B.N.) AND 4" ALONG PANEL EDGES (E.N.) AND 12" O.C. ALONG INTERMEDIATE SUPPORTS (FIELD) (F.N.), BLOCK ALL PANEL EDGES, SEE TYP. DETAILS. DIAPHRAGM NAILING TO BE INSPECTED BEFORE COVERING.
8. U.N.O. MINIMUM POST SIZE SHALL BE 4x DEPTH OF WALL.
9. FOR ALL DIMENSIONS, SEE ARCHITECTURAL DRAWINGS.
10. ALL HOLDOWNS SHALL BE TIGHTENED JUST PRIOR TO COVERING WALL HOLDOWN HARDWARE MUST BE SECURED IN PLACE PRIOR TO FOUNDATION INSPECTION.
11. FOR MINIMUM POST SIZE AT ENDS OF SHEAR WALL, REFER TO HOLDOWN SCHEDULE ON TYPICAL DETAILS.
12. ALL BOLTS IN WOOD SHALL BE A-307 STANDARD BOLTS. HOLES SHALL NOT BE MORE THAN 1/16" LARGER THAN THE BOLT DIAMETER. PROVIDE PLATE WASHERS AT ALL BOLTS. INSPECTOR TO VERIFY.
13. PLYWOOD WALL SHEATHING: AT ALL EXTERIOR WALLS OTHER THAN SHEAR WALL, 1/2" STR-1 PLYWOOD NAILED WITH 8d COMMONS SPACED AT 6" O.C. ALONG ALL PANEL EDGES (E.N.) AND 12" O.C. ALONG INTERMEDIATE SUPPORTS (FIELD) (F.N.)
14. FRAMING CONTRACTOR TO COORDINATE LAYOUT WITH ALL APPLICABLE TRADES INCLUDING PLUMBING, MECHANICAL AND ELECTRICAL.
15. FLOOR/ROOF SHEATHING BOUNDARY NAILING REQUIRED AT FULL LENGTH OF SHEAR WALLS, ALL BLK'G W/ STEEL STRAPS AND COLLECTOR BEAMS, U.N.O., SEE 5 & 6/S1.50.
16. PROVIDE FLOOR/ROOF SHEATHING BOUNDARY NAILING AND A35/LTP4 BETWEEN CONT. RIM JOIST/BLK'G AND CONT. TOP PLATES TO END OF WALL LINE W/ SPACING PER SHEAR WALL SCHEDULE ACCORDING TO ADJACENT SHEAR WALL DESIGNATION, U.N.O., SEE SHEET S1.40.
17. SEE PLAN AND TYPICAL DETAILS FOR CONCRETE SLAB ON GRADE INFO.
18. REFER TO ARCHITECTURAL, MECHANICAL, ELECTRICAL, PLUMBING AND CIVIL DRAWINGS FOR VERIFICATION OF ALL DIMENSIONS, ELEVATIONS, SLAB EDGES, SLAB DEPRESSIONS, SLAB OPENING, CURBS, FOOTING PENETRATIONS, SLAB PENETRATIONS, WALL OPENINGS AND EQUIPMENT PAD. NOTIFY ENGINEER WHEN ANY DISCREPANCY IS ENCOUNTERED.
19. REFER TO SOILS REPORT FOR ALL SUB-GRADE REQUIREMENTS.
20. TOP OF FOOTING ELEVATION SHALL BE 1'-0" BELOW TOP OF SLAB ELEVATION, TYPICAL UNLESS NOTED OTHERWISE.
21. GEOTECHNICAL/SOILS ENGINEER SHALL INSPECT AND APPROVE THE FOUNDATION EXCAVATION PRIOR TO REQUESTING A BUILDING DEPARTMENT FOUNDATION INSPECTION.

POST SCHEDULE

MARK	POST SIZE	MATERIAL
P-1	4x4	DF #1
P-2	4x6	DF #1
P-3	4x8	DF #1
P-4	6x6	DF #1
P-5	6x8	DF #1
P-6	3 1/2" x 3 1/2"	PSL 1.8E
P-7	3 1/2" x 5 1/4"	PSL 1.8E
P-8	3 1/2" x 7"	PSL 1.8E
P-9	5 1/4" x 5 1/4"	PSL 1.8E
P-10	5 1/4" x 7"	PSL 1.8E

HEADER BEAM SCHEDULE

MARK	BEAM SIZE	MATERIAL
HDR-1	6 x 10	DF #1
HDR-2	5 1/4" x 11 7/8"	PSL 2.0E
HDR-3	5 1/4" x 18"	PSL 2.0E

TYP. LOAD BEARING WALL STUD SCHEDULE (MIN. U.N.O.)

WALL / FLOOR	EXTERIOR WALL	INTERIOR WALL SINGLE STUD	INTERIOR WALL DOUBLE STUDS
SECOND FLOOR	2x6 @ 12" O.C.	2x @ 16" O.C.	2x @ 16" O.C. EACH SIDE (STAGGERED)
GROUND FLOOR	2x6 @ 16" O.C.	2x @ 16" O.C.	2x @ 8" O.C. EACH SIDE (STAGGERED)

NOTES:

1. SEE GENERAL NOTES FOR LUMBER GRADES.
2. INTERIOR NON-BEARING AND NON-SHEAR WALLS SHALL BE FRAMED WITH 2x4 @ 16" O.C.
3. SEE ARCHI. PLAN FOR LOCATIONS OF STAGGERED WALLS.

WOOD BEAM SCHEDULE

MARK	BEAM SIZE	MATERIAL
B-1	4 x 6	DF #1
B-2	6 x 6	DF #1
B-3	4 x 10	DF #1
B-4	6 x 10	DF #1
B-5	4 x 12	DF #1
B-6	6 x 12	DF #1
B-7	3 1/2" x 9 1/4"	PARALLAM PSL
B-8	5 1/4" x 9 1/4"	PARALLAM PSL
B-9	3 1/2" x 11 7/8"	PARALLAM PSL
B-10	5 1/4" x 11 7/8"	PARALLAM PSL
B-11	7" x 11 7/8"	PARALLAM PSL
B-13	3 1/2" x 14"	PARALLAM PSL
B-14	5 1/4" x 14"	PARALLAM PSL
B-15	7" x 14"	PARALLAM PSL
B-16	3 1/2" x 16"	PARALLAM PSL
B-17	5 1/4" x 16"	PARALLAM PSL
B-18	7" x 16"	PARALLAM PSL
B-19	3 1/2" x 18"	PARALLAM PSL
B-20	5 1/4" x 18"	PARALLAM PSL
B-21	7" x 18"	PARALLAM PSL

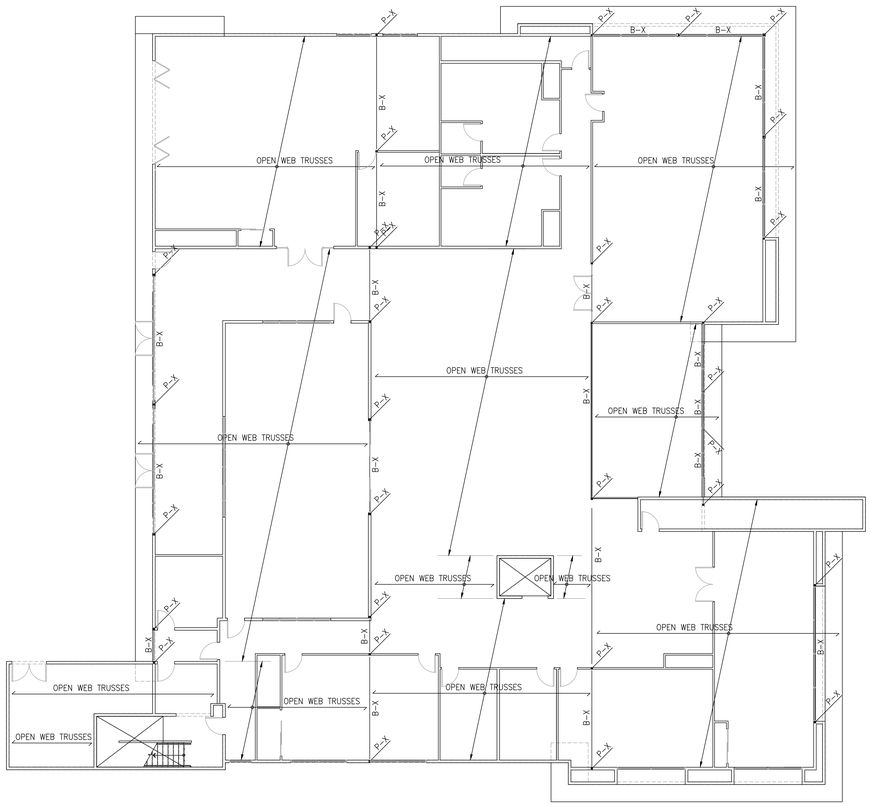

MAIN BLDG ROOF FRAMING PLAN

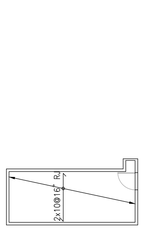

MAIN BLDG PH ROOF FRAMING PLAN

H:\PROJECT\9139 CORP FOR BETTER HOUSING\24-001 - FRESNO SENIOR CENTER\01 - CAD\STRUCTURAL\S2.10-S2.20 STRUCTURAL PLAN.DWG
6/11/2024 10:10 AM

Y&M Architects

Y&M Architects
255 S. Santa Fe Ave, Suite 103
Los Angeles, CA 90012
Tel. 213 623 2107 Fax. 213 623 2108
www.ymarch.com

BREEN DESIGN GROUP
3825 DEL AMO BOULEVARD
TORRANCE, CA 90503
PH: 310 464 8404
WWW.BREENDESIGN.COM

REGISTERED PROFESSIONAL ENGINEER
DAVID C. LEE
NO. S5881
EXP. 6-30-25
STRUCTURAL
STATE OF CALIFORNIA

FRESNO SENIOR CENTER

Project. *

Integrated Community Development

Developer. 21031 Ventura Boulevard, Suite 200
Woodland Hills, CA 91364

The above drawings, specifications, ideas, designs and arrangements represented thereby are and shall remain property of the Architect (YM Architects), and no part thereof shall be copied, disclosed to others or used in connection with any other project other than the specific project for which they have been prepared and developed, without the written consent of the Architect (YM Architects). Visual contact with these drawings or specifications shall constitute conclusive evidence of acceptance of these restrictions. Written dimensions on these drawings shall have pre-over scaled dimensions. Contractors shall verify and be responsible for all dimensions and conditions on the job, and this office must be notified of any variations from the dimensions and conditions shown by these drawings. Shop details must be submitted to this office for approval before proceeding with fabrication.

06.11.24 — Date

S2.20 — Page

Exhibit C

FRESNO SENIOR CENTER

Period Highlight: 3 — Plan Duration | Actual Start | % Complete | Actual (beyond plan) | % Complete (beyond plan)

	ACTIVITY	PLAN START	PLAN DURATION	ACTUAL START	ACTUAL DURATION	PERCENT COMPLETE
SITE IMPROVEMENTS	GRADING	1	6			0%
	FOUNDATION	7	8			0%
	SEWER	7	3			0%
	STORM	10	3			0%
	WATER	13	3			0%
	CHG	16	2			0%
	SOLAR	18	2			0%
	PAVE	20	3			0%
PRODUCTION SCHEDULE	DROP LUMBER	15	1			0%
	FRAMING	15	11			0%
	PLUMBING	16	1			0%
	DRYWALL PRE	17	1			0%
	ELECTRICAL	18	1			0%
	HVAC	19	1			0%
	STEEL STUDS	20	1			0%
	SCAFFOLDING	21	4			0%
	EXTERIOR DRYWALL	22	6			0%
	LATH	23	1			0%
	INSULATION	24	3			0%
	DRYWALL	26	5			0%
	LT WT CONCRETE	27	2			0%
	PAINT UDS	29	4			0%
	FINISH CARPENTRY	30	2			0%
	PAINT COMPLETE	31	2			0%
FINISH SCHEDULE	COUNTERTOPS	33	1			0%
	VINYL BATH	33	2			0%
	PLUMBING / ELECTRICAL TRIM	33	2			0%
	DRYWALL P.U.	33	2			0%
	PAINT P.U.	33	2			0%
	CARPET / VINYL	34	2			0%
	FINAL CLEAN	34	1			0%
	SITE COMPLETE (FLATWORK / POOL)	36	54			0%
	LANDSCAPE COMPLETE	89	8			0%
OFF SITE IMPROVEMENTS	DEMO	32	2			0%
	WET UTILITY CONNECTION	34	6			0%
	CURB & GUTTER	38	3			0%
	DRY UTILITY CONNECTION	41	4			0%
	SIDEWALKS	45	3			0%
	STORM DRAINS	48	3			0%

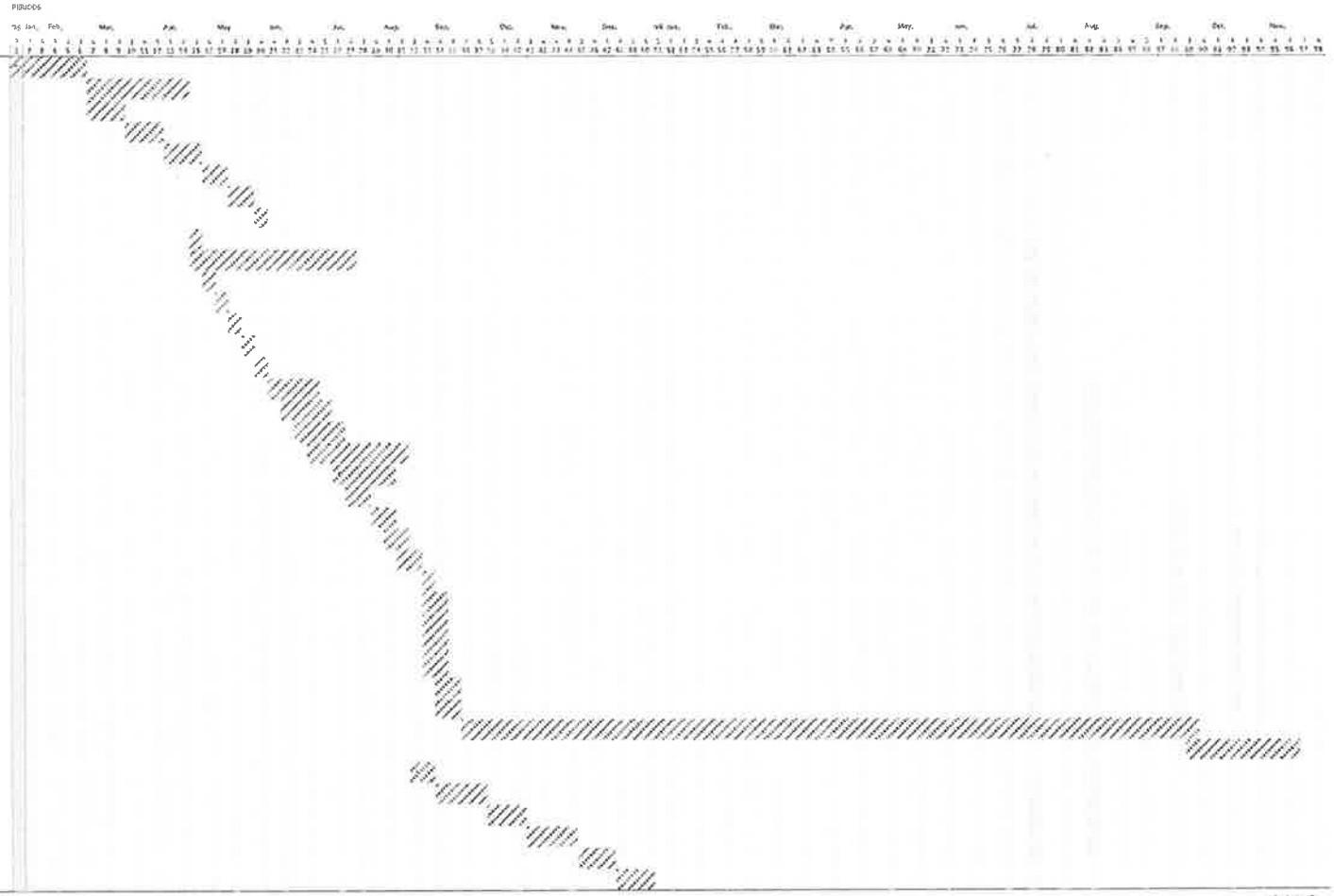

EXHIBIT D

LABOR RATES

SENIOR ACTIVITY CENTER

PHASE TWO – CONSTRUCTION SERVICES

"General Decision Number: CA20240018 10/18/2024

Superseded General Decision Number: CA20230018

State: California

Construction Types: Building, Heavy (Heavy and Dredging) and Highway

Counties: Alameda, Calaveras, Contra Costa, Fresno, Kings, Madera, Mariposa, Merced, Monterey, San Benito, San Francisco, San Joaquin, San Mateo, Santa Clara, Santa Cruz, Stanislaus and Tuolumne Counties in California.

BUILDING CONSTRUCTION PROJECTS; DREDGING PROJECTS (does not include hopper dredge work); HEAVY CONSTRUCTION PROJECTS (does not include water well drilling); HIGHWAY CONSTRUCTION PROJECTS

Note: Contracts subject to the Davis-Bacon Act are generally required to pay at least the applicable minimum wage rate required under Executive Order 14026 or Executive Order 13658. Please note that these Executive Orders apply to covered contracts entered into by the federal government that are subject to the Davis-Bacon Act itself, but do not apply to contracts subject only to the Davis-Bacon Related Acts, including those set forth at 29 CFR 5.1(a)(1).

If the contract is entered into on or after January 30, 2022, or the contract is renewed or extended (e.g., an option is exercised) on or after January 30, 2022:	. Executive Order 14026 generally applies to the contract. . The contractor must pay all covered workers at least $17.20 per hour (or the applicable wage rate listed on this wage determination, if it is higher) for all hours spent performing on the contract in 2024.
If the contract was awarded on or between January 1, 2015 and January 29, 2022, and the contract is not renewed or extended on or after January 30, 2022:	. Executive Order 13658 generally applies to the contract. . The contractor must pay all covered workers at least $12.90 per hour (or the applicable wage rate listed

	on this wage determination, if it is higher) for all hours spent performing on that contract in 2024.

The applicable Executive Order minimum wage rate will be adjusted annually. If this contract is covered by one of the Executive Orders and a classification considered necessary for performance of work on the contract does not appear on this wage determination, the contractor must still submit a conformance request.

Additional information on contractor requirements and worker protections under the Executive Orders is available at http://www.dol.gov/whd/govcontracts.

Modification Number	Publication Date
0	01/05/2024
1	01/12/2024
2	01/19/2024
3	01/26/2024
4	02/09/2024
5	02/16/2024
6	02/23/2024
7	03/01/2024
8	03/08/2024
9	03/15/2024
10	04/12/2024
11	04/26/2024
12	05/24/2024
13	07/05/2024
14	07/12/2024
15	07/19/2024
16	07/26/2024
17	08/09/2024
18	08/23/2024
19	09/06/2024
20	09/13/2024
21	09/20/2024
22	10/18/2024

* ASBE0016-004 05/01/2024

AREA 1: CALAVERAS, FRESNO, KINGS, MADERA, MARIPOSA, MERCED, MONTEREY, SAN BENITO, SAN JOAQUIN, SANTA CRUZ, STANISLAUS & TOULMNE COUNTIES

AREA 2: ALAMEDA, CONTRA COSTA, SAN FRANCISCO, SAN MATEO & SANTA

CLARA COUNTIES

	Rates	Fringes
Asbestos Removal worker/hazardous material handler (Includes preparation, wetting, stripping, removal, scrapping, vacuuming, bagging and disposing of all insulation materials from mechanical systems, whether they contain asbestos or not)		
Area 1	$ 34.56	11.40
Area 2	$ 36.53	9.27

ASBE0016-008 01/01/2024

AREA 1: ALAMEDA, CONTRA COSTA, MONTEREY, SAN BENITO, SAN FRANCISCO, SAN MATEO, SANTA CLARA, & SANTA CRUZ

AREA 2: CALAVERAS, COLUSA, FRESNO, KINGS, MADERA, MARIPOSA, MERCED, SAN JOAQUIN, STANISLAUS, & TUOLUMNE

	Rates	Fringes
Asbestos Workers/Insulator (Includes the application of all insulating materials, Protective Coverings, Coatings, and Finishes to all types of mechanical systems)		
Area 1	$ 84.76	25.07
Area 2	$ 64.56	25.07

BOIL0549-001 01/01/2021

AREA 1: ALAMEDA, CONTRA COSTA, SAN FRANCISCO, SAN MATEO & SANTA CLARA COUNTIES

AREA 2: REMAINING COUNTIES

	Rates	Fringes
BOILERMAKER		
Area 1	$ 49.62	41.27

Area 2.....$ 45.60 38.99

BRCA0003-001 08/01/2023

	Rates	Fringes
MARBLE FINISHER	$ 41.18	18.58

BRCA0003-003 08/01/2023

	Rates	Fringes
MARBLE MASON	$ 60.20	28.82

BRCA0003-005 05/01/2024

	Rates	Fringes
BRICKLAYER		
(1) Fresno, Kings, Madera, Mariposa, Merced	$ 51.17	25.80
(7) San Francisco, San Mateo	$ 57.02	28.50
(8) Alameda, Contra Costa, San Benito, Santa Clara	$ 56.94	26.28
(9) Calaveras, San Joaquin, Stanislaus, Toulumne	$ 52.76	25.01
(16) Monterey, Santa Cruz	$ 54.18	27.82

BRCA0003-008 07/01/2023

	Rates	Fringes
TERRAZZO FINISHER	$ 43.90	19.51
TERRAZZO WORKER/SETTER	$ 59.06	28.31

BRCA0003-011 04/01/2024

AREA 1: Alameda, Contra Costa, Monterey, San Benito, San Francisco, San Mateo, Santa Clara, Santa Cruz

AREA 2: Calaveras, San Joaquin, Stanislaus, Tuolumne

AREA 3: Fresno, Kings, Madera, Mariposa, Merced

	Rates	Fringes

TILE FINISHER
Area 1.....$ 37.75 19.28
Area 2.....$ 34.76 19.22
Area 3.....$ 32.68 18.32
Tile Layer
Area 1.....$ 59.92 22.62
Area 2.....$ 55.17 22.52
Area 3.....$ 50.28 22.05

CARP0022-001 07/01/2023

San Francisco County

	Rates	Fringes
Carpenters		
Bridge Builder/Highway Carpenter	$ 60.39	33.52
Hardwood Floorlayer, Shingler, Power Saw Operator, Steel Scaffold & Steel Shoring Erector, Saw Filer	$ 60.54	33.52
Journeyman Carpenter	$ 60.39	33.52
Millwright	$ 60.49	35.11

CARP0034-001 07/01/2021

	Rates	Fringes
Diver		
Assistant Tender, ROV Tender/Technician	$ 54.10	34.69
Diver standby	$ 60.51	34.69
Diver Tender	$ 59.51	34.69
Diver wet	$ 103.62	34.69
Manifold Operator (mixed gas)	$ 64.51	34.69
Manifold Operator (Standby)	$ 59.51	34.69

DEPTH PAY (Surface Diving):
050 to 100 ft $2.00 per foot
101 to 150 ft $3.00 per foot
151 to 220 ft $4.00 per foot
221 ft.-deeper $5.00 per foot

SATURATION DIVING:
The standby rate shall apply until saturation starts. The saturation diving rate applies when divers are under pressure continuously until work task and decompression are

complete. The diver rate shall be paid for all saturation hours.

DIVING IN ENCLOSURES:
Where it is necessary for Divers to enter pipes or tunnels, or other enclosures where there is no vertical ascent, the following premium shall be paid: Distance traveled from entrance 26 feet to 300 feet: $1.00 per foot. When it is necessary for a diver to enter any pipe, tunnel or other enclosure less than 48"" in height, the premium will be $1.00 per foot.

WORK IN COMBINATION OF CLASSIFICATIONS:
Employees working in any combination of classifications within the diving crew (except dive supervisor) in a shift are paid in the classification with the highest rate for that shift.

CARP0034-003 07/01/2021

	Rates	Fringes
Piledriver	$ 54.10	34.69

CARP0035-007 07/01/2020

AREA 1: Alameda, Contra Costa, San Francisco, San Mateo, Santa Clara counties

AREA 2: Monterey, San Benito, Santa Cruz Counties

AREA 3: Calaveras, Fresno, Kings, Madera, Mariposa, Merced, San Joaquin, Stanislaus, Tuolumne Counties

	Rates	Fringes
Modular Furniture Installer		
Area 1		
Installer	$ 28.76	22.53
Lead Installer	$ 32.21	23.03
Master Installer	$ 36.43	23.03
Area 2		
Installer	$ 26.11	22.53
Lead Installer	$ 29.08	23.03
Master Installer	$ 32.71	23.03
Area 3		
Installer	$ 25.16	22.53
Lead Installer	$ 27.96	23.03

Master Installer.....$ 31.38 23.03

CARP0035-008 08/01/2020

AREA 1: Alameda, Contra Costa, San Francisco, San Mateo, Santa Clara counties

AREA 2: Monterey, San Benito, Santa Cruz Counties

AREA 3: San Joaquin

AREA 4: Calaveras, Fresno, Kings, Madera, Mariposa, Merced, Stanislaus, Tuolumne Counties

	Rates	Fringes
Drywall Installers/Lathers:		
Area 1	$ 52.65	31.26
Area 2	$ 46.77	31.26
Area 3	$ 47.27	31.26
Area 4	$ 45.92	31.26
Drywall Stocker/Scrapper		
Area 1	$ 26.33	18.22
Area 2	$ 23.39	18.22
Area 3	$ 23.64	18.22
Area 4	$ 22.97	18.22

CARP0152-001 07/01/2020

Contra Costa County

	Rates	Fringes
Carpenters		
Bridge Builder/Highway Carpenter	$ 52.65	30.82
Hardwood Floorlayer, Shingler, Power Saw Operator, Steel Scaffold & Steel Shoring Erector, Saw Filer	$ 52.80	30.82
Journeyman Carpenter	$ 52.65	30.82
Millwright	$ 52.75	32.41

CARP0152-002 07/01/2020

San Joaquin County

	Rates	Fringes

Carpenters

Bridge Builder/Highway Carpenter	$ 52.65	30.82
Hardwood Floorlayer, Shingler, Power Saw Operator, Steel Scaffold & Steel Shoring Erector, Saw Filer	$ 46.92	30.82
Journeyman Carpenter	$ 46.77	30.82
Millwright	$ 49.27	32.41

CARP0152-004 07/01/2020

Calaveras, Mariposa, Merced, Stanislaus and Tuolumne Counties

	Rates	Fringes
Carpenters		
Bridge Builder/Highway Carpenter	$ 52.65	30.82
Hardwood Floorlayer, Shingler, Power Saw Operator, Steel Scaffold & Steel Shoring Erector, Saw Filer	$ 45.57	30.82
Journeyman Carpenter	$ 45.42	30.82
Millwright	$ 47.92	32.41

CARP0217-001 07/01/2023

San Mateo County

	Rates	Fringes
Carpenters		
Bridge Builder/Highway Carpenter	$ 60.39	33.52
Hardwood Floorlayer, Shingler, Power Saw Operator, Steel Scaffold & Steel Shoring Erector, Saw Filer	$ 60.54	33.52
Journeyman Carpenter	$ 60.39	33.52
Millwright	$ 60.49	35.11

CARP0405-001 07/01/2021

Santa Clara County

	Rates	Fringes
Carpenters		
Bridge Builder/Highway Carpenter	$ 54.85	31.49
Hardwood Floorlayer, Shingler, Power Saw Operator, Steel Scaffold & Steel Shoring Erector, Saw Filer	$ 55.00	31.49
Journeyman Carpenter	$ 54.85	31.49
Millwright	$ 54.95	33.08

CARP0405-002 07/01/2021

San Benito County

	Rates	Fringes
Carpenters		
Bridge Builder/Highway Carpenter	$ 54.85	31.49
Hardwood Floorlayer, Shingler, Power Saw Operator, Steel Scaffold & Steel Shoring Erector, Saw Filer	$ 49.12	31.49
Journeyman Carpenter	$ 48.97	31.49
Millwright	$ 51.47	33.08

CARP0505-001 07/01/2021

Santa Cruz County

	Rates	Fringes
Carpenters		
Bridge Builder/Highway Carpenter	$ 54.85	31.49
Hardwood Floorlayer, Shingler, Power Saw Operator, Steel Scaffold & Steel Shoring Erector, Saw Filer	$ 49.12	31.49
Journeyman Carpenter	$ 48.97	31.49
Millwright	$ 51.47	33.08

CARP0605-001 07/01/2021

Monterey County

	Rates	Fringes
Carpenters		
Bridge Builder/Highway Carpenter	$ 54.85	31.49
Hardwood Floorlayer, Shingler, Power Saw Operator, Steel Scaffold & Steel Shoring Erector, Saw Filer	$ 49.12	31.49
Journeyman Carpenter	$ 48.97	31.49
Millwright	$ 51.47	33.08

CARP0701-001 07/01/2021

Fresno and Madera Counties

	Rates	Fringes
Carpenters		
Bridge Builder/Highway Carpenter	$ 54.85	31.49
Hardwood Floorlayer, Shingler, Power Saw Operator, Steel Scaffold & Steel Shoring Erector, Saw Filer	$ 47.77	31.49
Journeyman Carpenter	$ 47.62	31.49
Millwright	$ 50.12	33.08

CARP0713-001 07/01/2021

Alameda County

	Rates	Fringes
Carpenters		
Bridge Builder/Highway Carpenter	$ 54.85	31.49
Hardwood Floorlayer, Shingler, Power Saw Operator, Steel Scaffold & Steel Shoring Erector, Saw Filer	$ 55.00	31.49
Journeyman Carpenter	$ 54.85	31.49
Millwright	$ 54.95	33.08

CARP1109-001 07/01/2021

Kings County

	Rates	Fringes
Carpenters		
Bridge Builder/Highway Carpenter	$ 54.85	31.49
Hardwood Floorlayer, Shingler, Power Saw Operator, Steel Scaffold & Steel Shoring Erector, Saw Filer	$ 47.77	31.49
Journeyman Carpenter	$ 47.62	31.49
Millwright	$ 50.12	33.08

ELEC0006-004 11/01/2023

SAN FRANCISCO COUNTY

	Rates	Fringes
Sound & Communications		
Installer	$ 51.68	3%+24.65
Technician	$ 59.43	3%+24.65

SCOPE OF WORK: Including any data system whose only function is to transmit or receive information; excluding all other data systems or multiple systems which include control function or power supply; inclusion or exclusion of terminations and testings of conductors determined by their function; excluding fire alarm work when installed in raceways (including wire and cable pulling) and when performed on new or major remodel building projects or jobs for which the conductors for the fire alarm system are installed in conduit; excluding installation of raceway systems, line voltage work, industrial work, life-safety systems (all buildings having floors located more than 75' above the lowest floor level having building access); excluding energy management systems.

FOOTNOTE: Fire alarm work when installed in raceways (including wire and cable pulling), on projects which involve new or major remodel building construction, for which the conductors for the fire alarm system are installed in the conduit, shall be performed by the inside electrician.

ELEC0006-007 06/01/2024

SAN FRANCISCO COUNTY

	Rates	Fringes
ELECTRICIAN.....	$ 91.25	3%+45.315

ELEC0100-002 06/01/2024

FRESNO, KINGS, AND MADERA COUNTIES

	Rates	Fringes
ELECTRICIAN.....	$ 45.00	29.15

ELEC0100-005 12/01/2023

FRESNO, KINGS, MADERA

	Rates	Fringes
Communications System		
Installer.....	$ 42.48	27.42
Technician.....	$ 48.85	27.42

SCOPE OF WORK

Includes the installation testing, service and maintenance, of the following systems which utilize the transmission and/or transference of voice, sound, vision and digital for commercial, education, security and entertainment purposes for the following: TV monitoring and surveillance, background-foreground music, intercom and telephone interconnect, inventory control systems, microwave transmission, multi-media, multiplex, nurse call system, radio page, school intercom and sound, burglar alarms, and low voltage master clock systems.

A. SOUND AND VOICE TRANSMISSION/TRANSFERENCE SYSTEMS Background foreground music, Intercom and telephone interconnect systems, Telephone systems Nurse call systems, Radio page systems, School intercom and sound systems, Burglar alarm systems, Low voltage, master clock systems, Multi-media/multiplex systems, Sound and musical entertainment systems, RF systems, Antennas and Wave Guide,

B. FIRE ALARM SYSTEMS Installation, wire pulling and testing

C. TELEVISION AND VIDEO SYSTEMS Television monitoring and surveillance systems Video security systems, Video entertainment systems, Video educational systems, Microwave transmission systems, CATV and CCTV

D. SECURITY SYSTEMS Perimeter security systems Vibration sensor systems Card access systems Access control systems, Sonar/infrared monitoring equipment

E. COMMUNICATIONS SYSTEMS THAT TRANSMIT OR RECEIVE INFORMATION AND/OR CONTROL SYSTEMS THAT ARE INTRINSIC TO THE ABOVE LISTED SYSTEMS SCADA (Supervisory Control and Data Acquisition) PCM (Pulse Code Modulation) Inventory Control Systems, Digital Data Systems Broadband and Baseband and Carriers Point of Sale Systems, VSAT Data Systems Data Communication Systems RF and Remote Control Systems, Fiber Optic Data Systems

WORK EXCLUDED Raceway systems are not covered (excluding Ladder-Rack for the purpose of the above listed systems). Chases and/or nipples (not to exceed 10 feet) may be installed on open wiring systems. Energy management systems. SCADA (Supervisory Control and Data Acquisition) when not intrinsic to the above listed systems (in the scope). Fire alarm systems when installed in raceways (including wire and cable pulling) shall be performed at the electrician wage rate, when either of the following two (2) conditions apply:
1. The project involves new or major remodel building trades construction.
2. The conductors for the fire alarm system are installed in conduit.

ELEC0234-001 12/25/2023

MONTEREY, SAN BENITO AND SANTA CRUZ COUNTIES

	Rates	Fringes
ELECTRICIAN		
Zone A	$ 65.16	29.55
Zone B	$ 71.68	29.75

Zone A: All of Santa Cruz, Monterey, and San Benito Counties within 25 air miles of Highway 1 and Dolan Road in Moss Landing, and an area extending 5 miles east and west of Highway 101 South to the San Luis Obispo County Line

Zone B: Any area outside of Zone A

ELEC0234-003 12/01/2021

MONTEREY, SAN BENITO, AND SANTA CRUZ COUNTIES

	Rates	Fringes
Sound & Communications		
Installer	$ 47.93	24.09
Technician	$ 55.12	24.30

SCOPE OF WORK: Including any data system whose only function is to transmit or receive information; excluding all other data systems or multiple systems which include control function or power supply; inclusion or exclusion of terminations and testings of conductors determined by their function; excluding fire alarm work when installed in raceways (including wire and cable pulling) and when performed on new or major remodel building projects or jobs for which the conductors for the fire alarm system are installed in conduit; excluding installation of raceway systems, line voltage work, industrial work, life-safety systems (all buildings having floors located more than 75' above the lowest floor level having building access); excluding energy management systems.

FOOTNOTE: Fire alarm work when installed in raceways (including wire and cable pulling), on projects which involve new or major remodel building construction, for which the conductors for the fire alarm system are installed in the conduit, shall be performed by the inside electrician.

ELEC0302-001 02/27/2023

CONTRA COSTA COUNTY

	Rates	Fringes
CABLE SPLICER	$ 68.92	32.67
ELECTRICIAN	$ 61.26	32.44

ELEC0302-003 12/01/2023

CONTRA COSTA COUNTY

	Rates	Fringes
Sound & Communications		
Installer	$ 48.44	27.60
Technician	$ 55.71	27.82

SCOPE OF WORK: Including any data system whose only function is to transmit or receive information; excluding all other data systems or multiple systems which include control function or power supply; inclusion or exclusion of terminations and testings of conductors determined by their function; excluding fire alarm work when installed in raceways (including wire and cable pulling) and when performed on new or major remodel building projects or jobs for which the conductors for the fire alarm system are installed in conduit; excluding installation of raceway systems, line voltage work, industrial work, life-safety systems (all buildings having floors located more than 75' above the lowest floor level having building access); excluding energy management systems.

FOOTNOTE: Fire alarm work when installed in raceways (including wire and cable pulling), on projects which involve new or major remodel building construction, for which the conductors for the fire alarm system are installed in the conduit, shall be performed by the inside electrician.

ELEC0332-001 06/01/2024

SANTA CLARA COUNTY

	Rates	Fringes
CABLE SPLICER	$ 100.25	46.72
ELECTRICIAN	$ 87.17	46.33

FOOTNOTES: Work under compressed air or where gas masks are required, orwork on ladders, scaffolds, stacks, ""Bosun's chairs,"" or other structures and where the workers are not protected by permanent guard rails at a distance of 40 to 60 ft. from the ground or supporting structures: to be paid one and one-half times the straight-time rate of pay. Work on structures of 60 ft. or over (as described above): to be paid twice the straight-time rate of pay.

ELEC0332-003 12/01/2023

SANTA CLARA COUNTY

	Rates	Fringes
Sound & Communications Installer	$ 53.18	27.745

Technician.....$ 61.16 27.985

SCOPE OF WORK: Including any data system whose only function is to transmit or receive information; excluding all other data systems or multiple systems which include control function or power supply; inclusion or exclusion of terminations and testings of conductors determined by their function; excluding fire alarm work when installed in raceways (including wire and cable pulling) and when performed on new or major remodel building projects or jobs for which the conductors for the fire alarm system are installed in conduit; excluding installation of raceway systems, line voltage work, industrial work, life-safety systems (all buildings having floors located more than 75' above the lowest floor level having building access); excluding energy management systems.

FOOTNOTE: Fire alarm work when installed in raceways (including wire and cable pulling), on projects which involve new or major remodel building construction, for which the conductors for the fire alarm system are installed in the conduit, shall be performed by the inside electrician.

ELEC0595-001 06/01/2024

ALAMEDA COUNTY

	Rates	Fringes
CABLE SPLICER	$ 84.18	3%+44.68
ELECTRICIAN	$ 73.20	3%+44.68

ELEC0595-002 06/01/2024

CALAVERAS AND SAN JOAQUIN COUNTIES

	Rates	Fringes
CABLE SPLICER	$ 59.34	3%+30.48
ELECTRICIAN		
(1) Tunnel work	$ 51.92	3%+30.48
(2) All other work	$ 49.45	3%+30.48

ELEC0595-006 11/01/2023

ALAMEDA COUNTY

	Rates	Fringes

Sound & Communications

Installer	$ 51.18	3%+24.15
Technician	$ 58.86	3%+24.15

SCOPE OF WORK: Including any data system whose only function is to transmit or receive information; excluding all other data systems or multiple systems which include control function or power supply; inclusion or exclusion of terminations and testings of conductors determined by their function; excluding fire alarm work when installed in raceways (including wire and cable pulling) and when performed on new or major remodel building projects or jobs for which the conductors for the fire alarm system are installed in conduit; excluding installation of raceway systems, line voltage work, industrial work, life-safety systems (all buildings having floors located more than 75' above the lowest floor level having building access); excluding energy management systems.

FOOTNOTE: Fire alarm work when installed in raceways (including wire and cable pulling), on projects which involve new or major remodel building construction, for which the conductors for the fire alarm system are installed in the conduit, shall be performed by the inside electrician.

ELEC0595-008 11/01/2023

CALAVERAS AND SAN JOAQUIN COUNTIES

	Rates	Fringes
Communications System		
Installer	$ 40.88	3%+24.15
Technician	$ 47.01	3%+24.15

SCOPE OF WORK: Including any data system whose only function is to transmit or receive information; excluding all other data systems or multiple systems which include control function or power supply; inclusion or exclusion of terminations and testings of conductors determined by their function; excluding fire alarm work when installed in raceways (including wire and cable pulling) and when performed on new or major remodel building projects or jobs for which the conductors for the fire alarm system are installed in conduit; excluding installation of raceway systems, line voltage work, industrial work, life-safety systems (all buildings having floors located more than 75'

above the lowest floor level having building access); excluding energy management systems.

FOOTNOTE: Fire alarm work when installed in raceways (including wire and cable pulling), on projects which involve new or major remodel building construction, for which the conductors for the fire alarm system are installed in the conduit, shall be performed by the inside electrician.

ELEC0617-001 06/01/2024

SAN MATEO COUNTY

	Rates	Fringes
ELECTRICIAN	$ 82.00	48.05

ELEC0617-003 12/01/2023

SAN MATEO COUNTY

	Rates	Fringes
Sound & Communications		
Installer	$ 53.18	27.75
Technician	$ 61.16	27.98

SCOPE OF WORK: Including any data system whose only function is to transmit or receive information; excluding all other data systems or multiple systems which include control function or power supply; inclusion or exclusion of terminations and testings of conductors determined by their function; excluding fire alarm work when installed in raceways (including wire and cable pulling) and when performed on new or major remodel building projects or jobs for which the conductors for the fire alarm system are installed in conduit; excluding installation of raceway systems, line voltage work, industrial work, life-safety systems (all buildings having floors located more than 75' above the lowest floor level having building access); excluding energy management systems.

FOOTNOTE: Fire alarm work when installed in raceways (including wire and cable pulling), on projects which involve new or major remodel building construction, for which the conductors for the fire alarm system are installed in the conduit, shall be performed by the inside electrician.

ELEC0684-001 06/01/2024

MARIPOSA, MERCED, STANISLAUS AND TUOLUMNE COUNTIES

	Rates	Fringes
ELECTRICIAN	$ 47.50	29.36

CABLE SPLICER = 110% of Journeyman Electrician

ELEC0684-004 12/01/2023

MARIPOSA, MERCED, STANISLAUS AND TUOLUMNE COUNTIES

	Rates	Fringes
Communications System		
Installer	$ 42.48	27.42
Technician	$ 48.85	27.62

SCOPE OF WORK: Including any data system whose only function is to transmit or receive information; excluding all other data systems or multiple systems which include control function or power supply; inclusion or exclusion of terminations and testings of conductors determined by their function; excluding fire alarm work when installed in raceways (including wire and cable pulling) and when performed on new or major remodel building projects or jobs for which the conductors for the fire alarm system are installed in conduit; excluding installation of raceway systems, line voltage work, industrial work, life-safety systems (all buildings having floors located more than 75' above the lowest floor level having building access); excluding energy management systems.

FOOTNOTE: Fire alarm work when installed in raceways (including wire and cable pulling), on projects which involve new or major remodel building construction, for which the conductors for the fire alarm system are installed in the conduit, shall be performed by the inside electrician.

ELEC1245-001 06/01/2024

	Rates	Fringes
LINE CONSTRUCTION		

(1) Lineman; Cable splicer..$ 70.16 24.46
(2) Equipment specialist
(operates crawler
tractors, commercial motor
vehicles, backhoes,
trenchers, cranes (50 tons
and below), overhead &
underground distribution
line equipment).....$ 53.30 22.01
(3) Groundman.....$ 40.76 21.51
(4) Powderman.....$ 51.87 18.79

HOLIDAYS: New Year's Day, M.L. King Day, Memorial Day, Independence Day, Labor Day, Veterans Day, Thanksgiving Day and day after Thanksgiving, Christmas Day

---

ELEV0008-001 01/01/2024

	Rates	Fringes
ELEVATOR MECHANIC.....	$ 80.76	37.885+a+b

FOOTNOTE:
a. PAID VACATION: Employer contributes 8% of regular hourly rate as vacation pay credit for employees with more than 5 years of service, and 6% for 6 months to 5 years of service.
b. PAID HOLIDAYS: New Year's Day, Memorial Day, Independence Day, Labor Day, Veterans' Day, Thanksgiving Day, Friday after Thanksgiving, and Christmas Day.

ENGI0003-001 06/28/2023

""AREA 1"" WAGE RATES ARE LISTED BELOW

""AREA 2"" RECEIVES AN ADDITIONAL $2.00 PER HOUR ABOVE AREA 1 RATES.

SEE AREA DEFINITIONS BELOW

	Rates	Fringes
OPERATOR: Power Equipment (AREA 1:)		
GROUP 1.....	$ 60.72	31.03
GROUP 2.....	$ 59.19	31.03
GROUP 3.....	$ 57.71	31.03
GROUP 4.....	$ 56.33	31.03

GROUP 5.....$ 55.06 31.03
GROUP 6.....$ 53.74 31.03
GROUP 7.....$ 52.60 31.03
GROUP 8.....$ 51.46 31.03
GROUP 8-A.....$ 49.25 31.03

OPERATOR: Power Equipment
(Cranes and Attachments -
AREA 1:)

GROUP 1
Cranes.....$ 52.30 31.15
Oiler.....$ 43.79 31.15
Truck crane oiler.....$ 46.08 31.15

GROUP 2
Cranes.....$ 50.54 31.15
Oiler.....$ 42.83 31.15
Truck crane oiler.....$ 45.07 31.15

GROUP 3
Cranes.....$ 48.80 31.15
Hydraulic.....$ 44.44 31.15
Oiler.....$ 42.55 31.15
Truck crane oiler.....$ 44.83 31.15

GROUP 4
Cranes.....$ 45.76 31.15

OPERATOR: Power Equipment
(Piledriving - AREA 1:)

GROUP 1
Lifting devices.....$ 52.64 31.15
Oiler.....$ 43.38 31.15
Truck Crane Oiler.....$ 45.66 31.15

GROUP 2
Lifting devices.....$ 50.82 31.15
Oiler.....$ 43.11 31.15
Truck Crane Oiler.....$ 45.41 31.15

GROUP 3
Lifting devices.....$ 49.14 31.15
Oiler.....$ 42.89 31.15
Truck Crane Oiler.....$ 45.12 31.15

GROUP 4
Lifting devices.....$ 47.37 31.15

GROUP 5
Lifting devices.....$ 44.73 31.15

GROUP 6
Lifting devices.....$ 42.50 31.15

OPERATOR: Power Equipment
(Steel Erection - AREA 1:)

GROUP 1
Cranes.....$ 53.27 31.15
Oiler.....$ 43.72 31.15
Truck Crane Oiler.....$ 45.95 31.15

GROUP 2

Cranes	$ 51.50	31.15
Oiler	$ 43.45	31.15
Truck Crane Oiler	$ 45.73	31.15
GROUP 3		
Cranes	$ 50.02	31.15
Hydraulic	$ 45.07	31.15
Oiler	$ 43.23	31.15
Truck Crane Oiler	$ 45.46	31.15
GROUP 4		
Cranes	$ 48.00	31.15
GROUP 5		
Cranes	$ 46.70	31.15
OPERATOR: Power Equipment (Tunnel and Underground Work - AREA 1:)		
SHAFTS, STOPES, RAISES:		
GROUP 1	$ 56.82	31.03
GROUP 1-A	$ 59.29	31.03
GROUP 2	$ 55.56	31.03
GROUP 3	$ 54.23	31.03
GROUP 4	$ 53.09	31.03
GROUP 5	$ 51.95	31.03
UNDERGROUND:		
GROUP 1	$ 56.72	31.03
GROUP 1-A	$ 59.19	31.03
GROUP 2	$ 55.46	31.03
GROUP 3	$ 54.13	31.03
GROUP 4	$ 52.99	31.03
GROUP 5	$ 51.85	31.03

FOOTNOTE: Work suspended by ropes or cables, or work on a Yo-Yo Cat: $.60 per hour additional.

POWER EQUIPMENT OPERATOR CLASSIFICATIONS

GROUP 1: Operator of helicopter (when used in erection work); Hydraulic excavator, 7 cu. yds. and over; Power shovels, over 7 cu. yds.

GROUP 2: Highline cableway; Hydraulic excavator, 3-1/2 cu. yds. up to 7 cu. yds.; Licensed construction work boat operator, on site; Power blade operator (finish); Power shovels, over 1 cu. yd. up to and including 7 cu. yds. m.r.c.

GROUP 3: Asphalt milling machine; Cable backhoe; Combination backhoe and loader over 3/4 cu. yds.; Continuous flight tie back machine assistant to engineer or mechanic; Crane mounted continuous flight tie back machine, tonnage to

apply; Crane mounted drill attachment, tonnage to apply; Dozer, slope brd; Gradall; Hydraulic excavator, up to 3 1/2 cu. yds.; Loader 4 cu. yds. and over; Long reach excavator; Multiple engine scraper (when used as push pull); Power shovels, up to and including 1 cu. yd.; Pre-stress wire wrapping machine; Side boom cat, 572 or larger; Track loader 4 cu. yds. and over; Wheel excavator (up to and including 750 cu. yds. per hour)

GROUP 4: Asphalt plant engineer/box person; Chicago boom; Combination backhoe and loader up to and including 3/4 cu. yd.; Concrete batch plant (wet or dry); Dozer and/or push cat; Pull- type elevating loader; Gradesetter, grade checker (GPS, mechanical or otherwise); Grooving and grinding machine; Heading shield operator; Heavy-duty drilling equipment, Hughes, LDH, Watson 3000 or similar; Heavy-duty repairperson and/or welder; Lime spreader; Loader under 4 cu. yds.; Lubrication and service engineer (mobile and grease rack); Mechanical finishers or spreader machine (asphalt, Barber-Greene and similar); Miller Formless M-9000 slope paver or similar; Portable crushing and screening plants; Power blade support; Roller operator, asphalt; Rubber-tired scraper, self-loading (paddle-wheels, etc.); Rubber- tired earthmoving equipment (scrapers); Slip form paver (concrete); Small tractor with drag; Soil stabilizer (P & H or equal); Spider plow and spider puller; Tubex pile rig; Unlicensed constuction work boat operator, on site; Timber skidder; Track loader up to 4 yds.; Tractor-drawn scraper; Tractor, compressor drill combination; Welder; Woods-Mixer (and other similar Pugmill equipment)

GROUP 5: Cast-in-place pipe laying machine; Combination slusher and motor operator; Concrete conveyor or concrete pump, truck or equipment mounted; Concrete conveyor, building site; Concrete pump or pumpcrete gun; Drilling equipment, Watson 2000, Texoma 700 or similar; Drilling and boring machinery, horizontal (not to apply to waterliners, wagon drills or jackhammers); Concrete mixer/all; Person and/or material hoist; Mechanical finishers (concrete) (Clary, Johnson, Bidwell Bridge Deck or similar types); Mechanical burm, curb and/or curb and gutter machine, concrete or asphalt); Mine or shaft hoist; Portable crusher; Power jumbo operator (setting slip-forms, etc., in tunnels); Screed (automatic or manual); Self-propelled compactor with dozer; Tractor with boom D6 or smaller; Trenching machine, maximum digging capacity over 5 ft. depth; Vermeer T-600B rock cutter or similar

GROUP 6: Armor-Coater (or similar); Ballast jack tamper;

Boom- type backfilling machine; Assistant plant engineer; Bridge and/or gantry crane; Chemical grouting machine, truck-mounted; Chip spreading machine operator; Concrete saw (self-propelled unit on streets, highways, airports and canals); Deck engineer; Drilling equipment Texoma 600, Hughes 200 Series or similar up to and including 30 ft. m.r.c.; Drill doctor; Helicopter radio operator; Hydro-hammer or similar; Line master; Skidsteer loader, Bobcat larger than 743 series or similar (with attachments); Locomotive; Lull hi-lift or similar; Oiler, truck mounted equipment; Pavement breaker, truck-mounted, with compressor combination; Paving fabric installation and/or laying machine; Pipe bending machine (pipelines only); Pipe wrapping machine (tractor propelled and supported); Screed (except asphaltic concrete paving); Self- propelled pipeline wrapping machine; Tractor; Self-loading chipper; Concrete barrier moving machine

GROUP 7: Ballast regulator; Boom truck or dual-purpose A-frame truck, non-rotating - under 15 tons; Cary lift or similar; Combination slurry mixer and/or cleaner; Drilling equipment, 20 ft. and under m.r.c.; Firetender (hot plant); Grouting machine operator; Highline cableway signalperson; Stationary belt loader (Kolman or similar); Lift slab machine (Vagtborg and similar types); Maginnes internal full slab vibrator; Material hoist (1 drum); Mechanical trench shield; Pavement breaker with or without compressor combination); Pipe cleaning machine (tractor propelled and supported); Post driver; Roller (except asphalt); Chip Seal; Self-propelled automatically applied concrete curing mahcine (on streets, highways, airports and canals); Self-propelled compactor (without dozer); Signalperson; Slip-form pumps (lifting device for concrete forms); Tie spacer; Tower mobile; Trenching machine, maximum digging capacity up to and including 5 ft. depth; Truck- type loader

GROUP 8: Bit sharpener; Boiler tender; Box operator; Brakeperson; Combination mixer and compressor (shotcrete/gunite); Compressor operator; Deckhand; Fire tender; Forklift (under 20 ft.); Generator; Gunite/shotcrete equipment operator; Hydraulic monitor; Ken seal machine (or similar); Mixermobile; Oiler; Pump operator; Refrigeration plant; Reservoir-debris tug (self-propelled floating); Ross Carrier (construction site); Rotomist operator; Self-propelled tape machine; Shuttlecar; Self-propelled power sweeper operator (includes vacuum sweeper); Slusher operator; Surface heater; Switchperson; Tar pot firetender; Tugger hoist, single drum; Vacuum cooling plant; Welding machine (powered other than by electricity)

GROUP 8-A: Elevator operator; Skidsteer loader-Bobcat 743 series or smaller, and similar (without attachments); Mini excavator under 25 H.P. (backhoe-trencher); Tub grinder wood chipper

---

ALL CRANES AND ATTACHMENTS

GROUP 1: Clamshell and dragline over 7 cu. yds.; Crane, over 100 tons; Derrick, over 100 tons; Derrick barge pedestal-mounted, over 100 tons; Self-propelled boom-type lifting device, over 100 tons

GROUP 2: Clamshell and dragline over 1 cu. yd. up to and including 7 cu. yds.; Crane, over 45 tons up to and including 100 tons; Derrick barge, 100 tons and under; Self-propelled boom-type lifting device, over 45 tons; Tower crane

GROUP 3: Clamshell and dragline up to and including 1 cu. yd.; Cranes 45 tons and under; Self-propelled boom-type lifting device 45 tons and under;

GROUP 4: Boom Truck or dual purpose A-frame truck, non-rotating over 15 tons; Truck-mounted rotating telescopic boom type lifting device, Manitex or similar (boom truck) over 15 tons; Truck-mounted rotating telescopic boom type lifting device, Manitex or similar (boom truck) - under 15 tons;

PILEDRIVERS

GROUP 1: Derrick barge pedestal mounted over 100 tons; Clamshell over 7 cu. yds.; Self-propelled boom-type lifting device over 100 tons; Truck crane or crawler, land or barge mounted over 100 tons

GROUP 2: Derrick barge pedestal mounted 45 tons to and including 100 tons; Clamshell up to and including 7 cu. yds.; Self-propelled boom-type lifting device over 45 tons; Truck crane or crawler, land or barge mounted, over 45 tons up to and including 100 tons; Fundex F-12 hydraulic pile rig

GROUP 3: Derrick barge pedestal mounted under 45 tons; Self-propelled boom-type lifting device 45 tons and under; Skid/scow piledriver, any tonnage; Truck crane or crawler,

land or barge mounted 45 tons and under

GROUP 4: Assistant operator in lieu of assistant to engineer; Forklift, 10 tons and over; Heavy-duty repairperson/welder

GROUP 5: Deck engineer

GROUP 6: Deckhand; Fire tender

STEEL ERECTORS

GROUP 1: Crane over 100 tons; Derrick over 100 tons; Self-propelled boom-type lifting device over 100 tons

GROUP 2: Crane over 45 tons to 100 tons; Derrick under 100 tons; Self-propelled boom-type lifting device over 45 tons to 100 tons; Tower crane

GROUP 3: Crane, 45 tons and under; Self-propelled boom-type lifting device, 45 tons and under

GROUP 4: Chicago boom; Forklift, 10 tons and over; Heavy-duty repair person/welder

GROUP 5: Boom cat

--

TUNNEL AND UNDERGROUND WORK

GROUP 1-A: Tunnel bore machine operator, 20' diameter or more

GROUP 1: Heading shield operator; Heavy-duty repairperson; Mucking machine (rubber tired, rail or track type); Raised bore operator (tunnels); Tunnel mole bore operator

GROUP 2: Combination slusher and motor operator; Concrete pump or pumpcrete gun; Power jumbo operator

GROUP 3: Drill doctor; Mine or shaft hoist

GROUP 4: Combination slurry mixer cleaner; Grouting Machine operator; Motorman

GROUP 5: Bit Sharpener; Brakeman; Combination mixer and compressor (gunite); Compressor operator; Oiler; Pump

operator; Slusher operator

AREA DESCRIPTIONS:

POWER EQUIPMENT OPERATORS, CRANES AND ATTACHMENTS,TUNNEL AND UNDERGROUND [These areas do not apply to Piledrivers and Steel Erectors]

AREA 1: ALAMEDA, CALAVERAS, CONTRA COSTA, FRESNO, KINGS, MADERA, MARIPOSA, MERCED, MONTEREY, SAN BENITO, SAN FRANCISCO, SAN JOAQUIN, SAN MATEO, SANTA CLARA, SANTA CRUZ, STANISLAUS, TUOLUMNE

AREA 2 -NOTED BELOW

THE REMAINING COUNTIES ARE SPLIT BETWEEN AREA 1 AND AREA 2 AS NOTED BELOW:

CALAVERAS COUNTY:
Area 1: Remainder
Area 2: Eastern Part

FRESNO COUNTY:
Area 1: Remainder
Area 2: Eastern Part

MADERA COUNTY:
Area 1: Remainder
Area 2: Eastern Part

MARIPOSA COUNTY:
Area 1: Remainder
Area 2: Eastern Part

MONTEREY COUNTY:
Area 1: Remainder
Area 2: Southwestern part

TUOLUMNE COUNTY:
Area 1: Remainder
Area 2: Eastern Part

ENGI0003-008 08/01/2024

	Rates	Fringes
Dredging: (DREDGING: CLAMSHELL & DIPPER DREDGING; HYDRAULIC SUCTION DREDGING:)		

AREA 1:

(1) Leverman.....$ 60.61 39.55

(2) Dredge Dozer; Heavy duty repairman.....$ 55.65 39.55

(3) Booster Pump Operator; Deck Engineer; Deck mate; Dredge Tender; Winch Operator.....$ 54.53 39.55

(4) Bargeman; Deckhand; Fireman; Leveehand; Oiler..$ 51.23 39.55

AREA 2:

(1) Leverman.....$ 62.61 39.55

(2) Dredge Dozer; Heavy duty repairman.....$ 57.65 39.55

(3) Booster Pump Operator; Deck Engineer; Deck mate; Dredge Tender; Winch Operator.....$ 56.53 39.55

(4) Bargeman; Deckhand; Fireman; Leveehand; Oiler..$ 53.23 39.55

AREA DESCRIPTIONS

AREA 1: ALAMEDA,BUTTE, CONTRA COSTA, KINGS, MARIN, MERCED, NAPA, SACRAMENTO, SAN BENITO, SAN FRANCISCO, SAN JOAQUIN, SAN MATEO, SANTA CLARA, SANTA CRUZ, SOLANO, STANISLAUS, SUTTER, YOLO, AND YUBA COUNTIES

AREA 2: MODOC COUNTY

THE REMAINGING COUNTIES ARE SPLIT BETWEEN AREA 1 AND AREA 2 AS NOTED BELOW:

ALPINE COUNTY:
Area 1: Northernmost part
Area 2: Remainder

CALAVERAS COUNTY:
Area 1: Remainder
Area 2: Eastern part

COLUSA COUNTY:
Area 1: Eastern part
Area 2: Remainder

ELDORADO COUNTY:
Area 1: North Central part
Area 2: Remainder

FRESNO COUNTY:
Area 1: Remainder
Area 2: Eastern part

GLENN COUNTY:
Area 1: Eastern part
Area 2: Remainder

LASSEN COUNTY:
Area 1: Western part along the Southern portion of border with Shasta County
Area 2: Remainder

MADERA COUNTY:
Area 1: Except Eastern part
Area 2: Eastern part

MARIPOSA COUNTY
Area 1: Except Eastern part
Area 2: Eastern part

MONTERREY COUNTY
Area 1: Except Southwestern part
Area 2: Southwestern part

NEVADA COUNTY:
Area 1: All but the Northern portion along the border of Sierra County
Area 2: Remainder

PLACER COUNTY:
Area 1: Al but the Central portion
Area 2: Remainder

PLUMAS COUNTY:
Area 1: Western portion
Area 2: Remainder

SHASTA COUNTY:
Area 1: All but the Northeastern corner
Area 2: Remainder

SIERRA COUNTY:
Area 1: Western part
Area 2: Remainder

SISKIYOU COUNTY:
Area 1: Central part
Area 2: Remainder

SONOMA COUNTY:
Area 1: All but the Northwestern corner
Area 2: Remainder

TEHAMA COUNTY:
Area 1: All but the Western border with Mendocino & Trinity Counties
Area 2: Remainder

TRINITY COUNTY:
Area 1: East Central part and the Northeastern border with Shasta County
Area 2: Remainder

TUOLUMNE COUNTY:
Area 1: Except Eastern part
Area 2: Eastern part

ENGI0003-019 07/01/2024

SEE AREA DESCRIPTIONS BELOW

	Rates	Fringes
OPERATOR: Power Equipment (LANDSCAPE WORK ONLY)		
GROUP 1		
AREA 1	$ 52.40	28.52
AREA 2	$ 54.40	28.52
GROUP 2		
AREA 1	$ 48.80	28.52
AREA 2	$ 50.80	28.52
GROUP 3		
AREA 1	$ 44.19	28.52
AREA 2	$ 46.19	28.52

GROUP DESCRIPTIONS:

GROUP 1: Landscape Finish Grade Operator: All finish grade work regardless of equipment used, and all equipment with a rating more than 65 HP.

GROUP 2: Landscape Operator up to 65 HP: All equipment with a manufacturer's rating of 65 HP or less except equipment covered by Group 1 or Group 3. The following equipment shall be included except when used for finish work as long as manufacturer's rating is 65 HP or less: A-Frame and Winch Truck, Backhoe, Forklift, Hydragraphic Seeder

Machine, Roller, Rubber-Tired and Track Earthmoving Equipment, Skiploader, Straw Blowers, and Trencher 31 HP up to 65 HP.

GROUP 3: Landscae Utility Operator: Small Rubber-Tired Tractor, Trencher Under 31 HP.

AREA DESCRIPTIONS:

AREA 1: ALAMEDA, BUTTE, CONTRA COSTA, KINGS, MARIN, MERCED, NAPA, SACRAMENTO, SAN BENITO, SAN FRANCISCO, SAN JOAQUIN, SAN MATEO, SANTA CLARA, SANTA CRUZ, SOLANO, STANISLAUS, SUTTER, YOLO, AND YUBA COUNTIES

AREA 2 - MODOC COUNTY

THE REMAINING COUNTIES ARE SPLIT BETWEEN AREA 1 AND AREA 2 AS NOTED BELOW:

ALPINE COUNTY:
Area 1: Northernmost part
Area 2: Remainder

CALAVERAS COUNTY:
Area 1: Except Eastern part
Area 2: Eastern part

COLUSA COUNTY:
Area 1: Eastern part
Area 2: Remainder

DEL NORTE COUNTY:
Area 1: Extreme Southwestern corner
Area 2: Remainder

ELDORADO COUNTY:
Area 1: North Central part
Area 2: Remainder

FRESNO COUNTY
Area 1: Except Eastern part
Area 2: Eastern part

GLENN COUNTY:
Area 1: Eastern part
Area 2: Remainder

HUMBOLDT COUNTY:
Area 1: Except Eastern and Southwestern parts
Area 2: Remainder

LAKE COUNTY:
Area 1: Southern part
Area 2: Remainder

LASSEN COUNTY:
Area 1: Western part along the Southern portion of border with Shasta County
Area 2: Remainder

MADERA COUNTY
Area 1: Remainder
Area 2: Eastern part

MARIPOSA COUNTY
Area 1: Remainder
Area 2: Eastern part

MENDOCINO COUNTY:
Area 1: Central and Southeastern parts
Area 2: Remainder

MONTEREY COUNTY
Area 1: Remainder
Area 2: Southwestern part

NEVADA COUNTY:
Area 1: All but the Northern portion along the border of Sierra County
Area 2: Remainder

PLACER COUNTY:
Area 1: All but the Central portion
Area 2: Remainder

PLUMAS COUNTY:
Area 1: Western portion
Area 2: Remainder

SHASTA COUNTY:
Area 1: All but the Northeastern corner
Area 2: Remainder

SIERRA COUNTY:
Area 1: Western part
Area 2: Remainder

SISKIYOU COUNTY:
Area 1: Central part
Area 2: Remainder

SONOMA COUNTY:
Area 1: All but the Northwestern corner
Area 2: Reaminder

TEHAMA COUNTY:
Area 1: All but the Western border with mendocino & Trinity Counties
Area 2: Remainder

TRINITY COUNTY:
Area 1: East Central part and the Northeaster border with Shasta County
Area 2: Remainder

TULARE COUNTY;
Area 1: Remainder
Area 2: Eastern part

TUOLUMNE COUNTY:
Area 1: Remainder
Area 2: Eastern Part

IRON0377-001 01/01/2024

ALAMEDA, CONTRA COSTA, SAN MATEO, SANTA CLARA COUNTIES

	Rates	Fringes
Ironworkers:		
Fence Erector	$ 42.53	26.26
Ornamental, Reinforcing and Structural	$ 52.08	34.90

PREMIUM PAY:

$6.00 additional per hour at the following locations:

China Lake Naval Test Station, Chocolate Mountains Naval Reserve-Niland,
Edwards AFB, Fort Irwin Military Station, Fort Irwin Training Center-Goldstone, San Clemente Island, San Nicholas Island, Susanville Federal Prison, 29 Palms - Marine Corps, U.S. Marine Base - Barstow, U.S. Naval Air Facility - Sealey, Vandenberg AFB

$4.00 additional per hour at the following locations:

Army Defense Language Institute - Monterey, Fallon Air Base, Naval Post Graduate School - Monterey, Yermo Marine Corps

Logistics Center

$2.00 additional per hour at the following locations:

Port Hueneme, Port Mugu, U.S. Coast Guard Station - Two Rock

IRON0377-003 01/01/2024

SAN FRANCISCO CITY and COUNTY

	Rates	Fringes
Ironworkers:		
Fence Erector	$ 42.53	26.26
Ornamental, Reinforcing and Structural	$ 52.58	34.90

PREMIUM PAY:

$6.00 additional per hour at the following locations:

China Lake Naval Test Station, Chocolate Mountains Naval Reserve-Niland,
Edwards AFB, Fort Irwin Military Station, Fort Irwin Training Center-Goldstone, San Clemente Island, San Nicholas Island, Susanville Federal Prison, 29 Palms - Marine Corps, U.S. Marine Base - Barstow, U.S. Naval Air Facility - Sealey, Vandenberg AFB

$4.00 additional per hour at the following locations:

Army Defense Language Institute - Monterey, Fallon Air Base, Naval Post Graduate School - Monterey, Yermo Marine Corps Logistics Center

$2.00 additional per hour at the following locations:

Port Hueneme, Port Mugu, U.S. Coast Guard Station - Two Rock

IRON0433-005 01/01/2024

REMAINING COUNTIES

	Rates	Fringes
IRONWORKER		
Fence Erector	$ 42.53	26.26

Ornamental, Reinforcing
and Structural.....$ 47.45 34.90

PREMIUM PAY:

$6.00 additional per hour at the following locations:

China Lake Naval Test Station, Chocolate Mountains Naval Reserve-Niland,
Edwards AFB, Fort Irwin Military Station, Fort Irwin Training Center-Goldstone, San Clemente Island, San Nicholas Island, Susanville Federal Prison, 29 Palms - Marine Corps, U.S. Marine Base - Barstow, U.S. Naval Air Facility - Sealey, Vandenberg AFB

$4.00 additional per hour at the following locations:

Army Defense Language Institute - Monterey, Fallon Air Base, Naval Post Graduate School - Monterey, Yermo Marine Corps Logistics Center

$2.00 additional per hour at the following locations:

Port Hueneme, Port Mugu, U.S. Coast Guard Station - Two Rock

LABO0067-006 07/01/2024

AREA ""1"" - ALAMEDA, CONTRA COSTA, SAN FRANCISCO, SAN MATEO AND SANTA CLARA COUNTIES

AREA ""2"" - CALAVERAS, FRESNO, KINGS, MADERA, MARIPOSA, MERCED, MONTEREY, SAN BENITO, SAN JOAQUIN, STANISLAUS, AND TUOLUMNE COUNTIES

	Rates	Fringes
LABORER (ASBESTOS/MOLD/LEAD LABORER)		
Area 1	$ 37.75	29.69
Area 2	$ 36.75	29.69

ASBESTOS REMOVAL-SCOPE OF WORK: Site mobilization; initial site clean-up; site preparation; removal of asbestos-containing materials from walls and ceilings; or from pipes, boilers and mechanical systems only if they are being scrapped; encapsulation, enclosure and disposal of asbestos-containing materials by hand or with equipment or machinery; scaffolding; fabrication of temporary wooden

barriers; and assembly of decontamination stations.

LABO0073-002 07/01/2023

CALAVERAS AND SAN JOAQUIN COUNTIES

	Rates	Fringes
LABORER (TRAFFIC CONTROL/LANE CLOSURE)		
Escort Driver, Flag Person..	$ 36.26	27.30
Traffic Control Person I....	$ 36.56	27.30
Traffic Control Person II...	$ 34.06	27.30

TRAFFIC CONTROL PERSON I: Layout of traffic control, crash cushions, construction area and roadside signage.

TRAFFIC CONTROL PERSON II: Installation and removal of temporary/permanent signs, markers, delineators and crash cushions.

LABO0073-003 07/01/2023

SAN JOAQUIN COUNTY

	Rates	Fringes
LABORER		
Mason Tender-Brick.....	$ 36.29	25.55

LABO0073-005 06/26/2023

	Rates	Fringes
Tunnel and Shaft Laborers:		
GROUP 1.....	$ 45.89	27.72
GROUP 2.....	$ 45.66	27.72
GROUP 3.....	$ 45.41	27.72
GROUP 4.....	$ 44.96	27.72
GROUP 5.....	$ 44.42	27.72
Shotcrete Specialist.....	$ 46.41	27.72

TUNNEL AND SHAFT CLASSIFICATIONS

GROUP 1: Diamond driller; Groundmen; Gunite and shotcrete nozzlemen

GROUP 2: Rodmen; Shaft work & raise (below actual or

excavated ground level)

GROUP 3: Bit grinder; Blaster, driller, powdermen, heading; Cherry pickermen - where car is lifted; Concrete finisher in tunnel; Concrete screedman; Grout pumpman and potman; Gunite & shotcrete gunman & potman; Headermen; High pressure nozzleman; Miner - tunnel, including top and bottom man on shaft and raise work; Nipper; Nozzleman on slick line; Sandblaster - potman, Robotic Shotcrete Placer, Segment Erector, Tunnel Muck Hauler, Steel Form raiser and setter; Timberman, retimberman (wood or steel or substitute materials therefore); Tugger (for tunnel laborer work); Cable tender; Chuck tender; Powderman - primer house

GROUP 4: Vibrator operator, pavement breaker; Bull gang - muckers, trackmen; Concrete crew - includes rodding and spreading, Dumpmen (any method)

GROUP 5: Grout crew; Reboundman; Swamper/ Brakeman

LABO0073-007 06/26/2023

CALAVERAS AND SAN JOAQUIN COUNTIES

	Rates	Fringes
LABORER (CONSTRUCTION CRAFT LABORERS)		
Construction Specialist Group	$ 36.20	27.30
GROUP 1	$ 35.50	27.30
GROUP 1-a	$ 35.72	27.30
GROUP 1-c	$ 35.55	27.30
GROUP 1-e	$ 36.05	27.30
GROUP 1-f	$ 30.37	23.20
GROUP 2	$ 35.35	27.30
GROUP 3	$ 35.25	27.30
GROUP 4	$ 28.94	27.30
See groups 1-b and 1-d under laborer classifications.		
LABORER (GARDENERS, HORTICULTURAL & LANDSCAPE LABORERS)		
(1) New Construction	$ 35.25	27.30
(2) Establishment Warranty Period	$ 28.94	27.30
LABORER (GUNITE)		
GROUP 1	$ 36.46	27.30
GROUP 2	$ 35.96	27.30
GROUP 3	$ 35.37	27.30

GROUP 4.....$ 35.25 27.30

LABORER (WRECKING)

GROUP 1.....$ 35.50 27.30

GROUP 2.....$ 35.35 27.30

FOOTNOTES:

Laborers working off or with or from bos'n chairs, swinging scaffolds, belts shall receive $0.25 per hour above the applicable wage rate. This shall not apply to workers entitled to receive the wage rate set forth in Group 1-a below.

LABORER CLASSIFICATIONS

CONSTRUCTION SPECIALIST GROUP: Asphalt ironer and raker; Chainsaw; Laser beam in connection with laborers' work; Cast-in- place manhole form setter; Pressure pipelayer; Davis trencher - 300 or similar type (and all small trenchers); Blaster; Diamond driller; Multiple unit drill; Hydraulic drill

GROUP 1: Asphalt spreader boxes (all types); Barko, Wacker and similar type tampers; Buggymobile; Caulker, bander, pipewrapper, conduit layer, plastic pipelayer; Certified hazardous waste worker including Leade Abatement; Compactors of all types; Concrete and magnesite mixer, 1/2 yd. and under; Concrete pan work; Concrete sander; Concrete saw; Cribber and/or shoring; Cut granite curb setter; Dri-pak-it machine; Faller, logloader and bucker; Form raiser, slip forms; Green cutter; Headerboard, Hubsetter, aligner, by any method; High pressure blow pipe (1-1/2"" or over, 100 lbs. pressure/over); Hydro seeder and similar type; Jackhammer operator; Jacking of pipe over 12 inches; Jackson and similar type compactor; Kettle tender, pot and worker applying asphalt, lay-kold, creosote, lime, caustic and similar type materials (applying means applying, dipping or handling of such materials); Lagging, sheeting, whaling, bracing, trenchjacking, lagging hammer; Magnesite, epoxyresin, fiberglass, mastic worker (wet or dry); No joint pipe and stripping of same, including repair of voids; Pavement breaker and spader, including tool grinder; Perma curb; Pipelayer (including grade checking in connection with pipelaying); Precast-manhole setter; Pressure pipe tester; Post hole digger, air, gas and electric; Power broom sweeper; Power tampers of all types (except as shown in Group 2); Ram set gun and stud gun; Riprap stonepaver and rock-slinger, including placing of

sacked concrete and/or sand (wet or dry) and gabions and similar type; Rotary scarifier or multiple head concrete chipping scarifier; Roto and Ditch Witch; Rototiller; Sandblaster, pot, gun, nozzle operators; Signalling and rigging; Tank cleaner; Tree climber; Turbo blaster; Vibrascreed, bull float in connection with laborers' work; Vibrator; Hazardous waste worker (lead removal); Asbestos and mold removal worker

GROUP 1-a: Joy drill model TWM-2A; Gardner-Denver model DH143 and similar type drills; Track driller; Jack leg driller; Wagon driller; Mechanical drillers, all types regardless of type or method of power; Mechanical pipe layers, all types regardless of type or method of power; Blaster and powder; All work of loading, placing and blasting of all powder and explosives of whatever type regardless of method used for such loading and placing; High scalers (including drilling of same); Tree topper; Bit grinder

GROUP 1-b: Sewer cleaners shall receive $4.00 per day above Group 1 wage rates. ""Sewer cleaner"" means any worker who handles or comes in contact with raw sewage in small diameter sewers. Those who work inside recently active, large diameter sewers, and all recently active sewer manholes shal receive $5.00 per day above Group 1 wage rates.

GROUP 1-c: Burning and welding in connection with laborers' work; Synthetic thermoplastics and similar type welding

GROUP 1-d: Maintenance and repair track and road beds. All employees performing work covered herein shall receive $ .25 per hour above their regular rate for all work performed on underground structures not specifically covered herein. This paragraph shall not be construed to apply to work below ground level in open cut. It shall apply to cut and cover work of subway construction after the temporary cover has been placed.

GROUP 1-e: Work on and/or in bell hole footings and shafts thereof, and work on and in deep footings. (A deep footing is a hole 15 feet or more in depth.) In the event the depth of the footing is unknown at the commencement of excavation, and the final depth exceeds 15 feet, the deep footing wage rate would apply to all employees for each and every day worked on or in the excavation of the footing from the date of inception.

GROUP 1-f: Wire winding machine in connection with guniting or shot crete

GROUP 2: Asphalt shoveler; Cement dumper and handling dry cement or gypsum; Choke-setter and rigger (clearing work); Concrete bucket dumper and chute; Concrete chipping and grinding; Concrete laborer (wet or dry); Driller tender, chuck tender, nipper; Guinea chaser (stake), grout crew; High pressure nozzle, adductor; Hydraulic monitor (over 100 lbs. pressure); Loading and unloading, carrying and hauling of all rods and materials for use in reinforcing concrete construction; Pittsburgh chipper and similar type brush shredders; Sloper; Single foot, hand-held, pneumatic tamper; All pneumatic, air, gas and electric tools not listed in Groups 1 through 1-f; Jacking of pipe - under 12 inches

GROUP 3: Construction laborers, including bridge and general laborer; Dump, load spotter; Flag person; Fire watcher; Fence erector; Guardrail erector; Gardener, horticultural and landscape laborer; Jetting; Limber, brush loader and piler; Pavement marker (button setter); Maintenance, repair track and road beds; Streetcar and railroad construction track laborer; Temporary air and water lines, Victaulic or similar; Tool room attendant (jobsite only)

GROUP 4: Final clean-up work of debris, grounds and building including but not limited to: street cleaner; cleaning and washing windows; brick cleaner (jobsite only); material cleaner (jobsite only). The classification ""material cleaner"" is to be utilized under the following conditions:
A: at demolition site for the salvage of the material.
B: at the conclusion of a job where the material is to be salvaged and stocked to be reused on another job.
C: for the cleaning of salvage material at the jobsite or temporary jobsite yard.

The material cleaner classification should not be used in the performance of ""form stripping, cleaning and oiling and moving to the next point of erection"".

GUNITE LABORER CLASSIFICATIONS

GROUP 1: Structural Nozzleman

GROUP 2: Nozzleman, Gunman, Potman, Groundman

GROUP 3: Reboundman

GROUP 4: Gunite laborer

WRECKING WORK LABORER CLASSIFICATIONS

GROUP 1: Skilled wrecker (removing and salvaging of sash, windows and materials)

GROUP 2: Semi-skilled wrecker (salvaging of other building materials)

LABO0073-009 07/01/2023

CALAVERAS AND SAN JOAQUIN COUNTIES

	Rates	Fringes
LABORER (Plaster Tender).....	$ 39.77	28.54

Work on a swing stage scaffold: $1.00 per hour additional.

LABO0261-003 07/01/2023

SAN FRANCISCO AND SAN MATEO COUNTIES

	Rates	Fringes
LABORER (TRAFFIC CONTROL/LANE CLOSURE)		
Escort Driver, Flag Person..	$ 37.26	27.30
Traffic Control Person I....	$ 37.56	27.30
Traffic Control Person II...	$ 35.06	27.30

TRAFFIC CONTROL PERSON I: Layout of traffic control, crash cushions, construction area and roadside signage.

TRAFFIC CONTROL PERSON II: Installation and removal of temporary/permanent signs, markers, delineators and crash cushions.

LABO0261-005 06/26/2023

SAN FRANCISCO AND SAN MATEO COUNTIES

	Rates	Fringes
Tunnel and Shaft Laborers:		
GROUP 1.....	$ 45.89	27.72

GROUP 2	$ 45.66	27.72
GROUP 3	$ 45.41	27.72
GROUP 4	$ 44.96	27.72
GROUP 5	$ 44.42	27.72
Shotcrete Specialist	$ 46.41	27.72

TUNNEL AND SHAFT CLASSIFICATIONS

GROUP 1: Diamond driller; Groundmen; Gunite and shotcrete nozzlemen

GROUP 2: Rodmen; Shaft work & raise (below actual or excavated ground level)

GROUP 3: Bit grinder; Blaster, driller, powdermen, heading; Cherry pickermen - where car is lifted; Concrete finisher in tunnel; Concrete screedman; Grout pumpman and potman; Gunite & shotcrete gunman & potman; Headermen; High pressure nozzleman; Miner - tunnel, including top and bottom man on shaft and raise work; Nipper; Nozzleman on slick line; Sandblaster - potman, Robotic Shotcrete Placer, Segment Erector, Tunnel Muck Hauler, Steel Form raiser and setter; Timberman, retimberman (wood or steel or substitute materials therefore); Tugger (for tunnel laborer work); Cable tender; Chuck tender; Powderman - primer house

GROUP 4: Vibrator operator, pavement breaker; Bull gang - muckers, trackmen; Concrete crew - includes rodding and spreading, Dumpmen (any method)

GROUP 5: Grout crew; Reboundman; Swamper/ Brakeman

LABO0261-009 06/26/2023

SAN FRANCISCO, AND SAN MATEO COUNTIES

	Rates	Fringes
LABORER (CONSTRUCTION CRAFT LABORERS - AREA A:)		
Construction Specialist Group	$ 37.20	27.30
GROUP 1	$ 36.50	27.30
GROUP 1-a	$ 36.72	27.30
GROUP 1-c	$ 36.55	27.30
GROUP 1-e	$ 37.05	27.30
GROUP 1-f	$ 31.37	23.20
GROUP 2	$ 36.35	27.30
GROUP 3	$ 36.25	27.30

GROUP 4.....$ 29.94 27.30

See groups 1-b and 1-d under laborer classifications.

LABORER (GARDENERS,
HORTICULTURAL & LANDSCAPE
LABORERS - AREA A:)

(1) New Construction.....$ 36.25 27.30

(2) Establishment Warranty
Period.....$ 29.94 27.30

LABORER (WRECKING - AREA A:)

GROUP 1.....$ 36.50 27.30

GROUP 2.....$ 36.35 27.30

Laborers: (GUNITE - AREA A:)

GROUP 1.....$ 37.46 27.30

GROUP 2.....$ 36.96 27.30

GROUP 3.....$ 36.37 27.30

GROUP 4.....$ 36.25 27.30

FOOTNOTES:

Laborers working off or with or from bos'n chairs, swinging scaffolds, belts shall receive $0.25 per hour above the applicable wage rate. This shall not apply to workers entitled to receive the wage rate set forth in Group 1-a below.

LABORER CLASSIFICATIONS

CONSTRUCTION SPECIALIST GROUP: Asphalt ironer and raker; Chainsaw; Laser beam in connection with laborers' work; Cast-in- place manhole form setter; Pressure pipelayer; Davis trencher - 300 or similar type (and all small trenchers); Blaster; Diamond driller; Multiple unit drill; Hydraulic drill

GROUP 1: Asphalt spreader boxes (all types); Barko, Wacker and similar type tampers; Buggymobile; Caulker, bander, pipewrapper, conduit layer, plastic pipelayer; Certified hazardous waste worker including Leade Abatement; Compactors of all types; Concrete and magnesite mixer, 1/2 yd. and under; Concrete pan work; Concrete sander; Concrete saw; Cribber and/or shoring; Cut granite curb setter; Dri-pak-it machine; Faller, logloader and bucker; Form raiser, slip forms; Green cutter; Headerboard, Hubsetter, aligner, by any method; High pressure blow pipe (1-1/2"" or over, 100 lbs. pressure/over); Hydro seeder and similar type; Jackhammer operator; Jacking of pipe over 12 inches; Jackson and similar type compactor; Kettle tender, pot and worker applying asphalt, lay-kold, creosote, lime, caustic

and similar type materials (applying means applying, dipping or handling of such materials); Lagging, sheeting, whaling, bracing, trenchjacking, lagging hammer; Magnesite, epoxyresin, fiberglass, mastic worker (wet or dry); No joint pipe and stripping of same, including repair of voids; Pavement breaker and spader, including tool grinder; Perma curb; Pipelayer (including grade checking in connection with pipelaying); Precast-manhole setter; Pressure pipe tester; Post hole digger, air, gas and electric; Power broom sweeper; Power tampers of all types (except as shown in Group 2); Ram set gun and stud gun; Riprap stonepaver and rock-slinger, including placing of sacked concrete and/or sand (wet or dry) and gabions and similar type; Rotary scarifier or multiple head concrete chipping scarifier; Roto and Ditch Witch; Rototiller; Sandblaster, pot, gun, nozzle operators; Signalling and rigging; Tank cleaner; Tree climber; Turbo blaster; Vibrascreed, bull float in connection with laborers' work; Vibrator; Hazardous waste worker (lead removal); Asbestos and mold removal worker

GROUP 1-a: Joy drill model TWM-2A; Gardner-Denver model DH143 and similar type drills; Track driller; Jack leg driller; Wagon driller; Mechanical drillers, all types regardless of type or method of power; Mechanical pipe layers, all types regardless of type or method of power; Blaster and powder; All work of loading, placing and blasting of all powder and explosives of whatever type regardless of method used for such loading and placing; High scalers (including drilling of same); Tree topper; Bit grinder

GROUP 1-b: Sewer cleaners shall receive $4.00 per day above Group 1 wage rates. ""Sewer cleaner"" means any worker who handles or comes in contact with raw sewage in small diameter sewers. Those who work inside recently active, large diameter sewers, and all recently active sewer manholes shal receive $5.00 per day above Group 1 wage rates.

GROUP 1-c: Burning and welding in connection with laborers' work; Synthetic thermoplastics and similar type welding

GROUP 1-d: Maintenance and repair track and road beds. All employees performing work covered herein shall receive $ .25 per hour above their regular rate for all work performed on underground structures not specifically covered herein. This paragraph shall not be construed to apply to work below ground level in open cut. It shall apply to cut and cover work of subway construction after the temporary cover has been placed.

GROUP 1-e: Work on and/or in bell hole footings and shafts thereof, and work on and in deep footings. (A deep footing is a hole 15 feet or more in depth.) In the event the depth of the footing is unknown at the commencement of excavation, and the final depth exceeds 15 feet, the deep footing wage rate would apply to all employees for each and every day worked on or in the excavation of the footing from the date of inception.

GROUP 1-f: Wire winding machine in connection with guniting or shot crete

GROUP 2: Asphalt shoveler; Cement dumper and handling dry cement or gypsum; Choke-setter and rigger (clearing work); Concrete bucket dumper and chute; Concrete chipping and grinding; Concrete laborer (wet or dry); Driller tender, chuck tender, nipper; Guinea chaser (stake), grout crew; High pressure nozzle, adductor; Hydraulic monitor (over 100 lbs. pressure); Loading and unloading, carrying and hauling of all rods and materials for use in reinforcing concrete construction; Pittsburgh chipper and similar type brush shredders; Sloper; Single foot, hand-held, pneumatic tamper; All pneumatic, air, gas and electric tools not listed in Groups 1 through 1-f; Jacking of pipe - under 12 inches

GROUP 3: Construction laborers, including bridge and general laborer; Dump, load spotter; Flag person; Fire watcher; Fence erector; Guardrail erector; Gardener, horticultural and landscape laborer; Jetting; Limber, brush loader and piler; Pavement marker (button setter); Maintenance, repair track and road beds; Streetcar and railroad construction track laborer; Temporary air and water lines, Victaulic or similar; Tool room attendant (jobsite only)

GROUP 4: Final clean-up work of debris, grounds and building including but not limited to: street cleaner; cleaning and washing windows; brick cleaner (jobsite only); material cleaner (jobsite only). The classification ""material cleaner"" is to be utilized under the following conditions:

A: at demolition site for the salvage of the material.
B: at the conclusion of a job where the material is to be salvaged and stocked to be reused on another job.
C: for the cleaning of salvage material at the jobsite or temporary jobsite yard.

The material cleaner classification should not be used in the performance of ""form stripping, cleaning and oiling and moving to the next point of erection"".

GUNITE LABORER CLASSIFICATIONS

GROUP 1: Structural Nozzleman

GROUP 2: Nozzleman, Gunman, Potman, Groundman

GROUP 3: Reboundman

GROUP 4: Gunite laborer

WRECKING WORK LABORER CLASSIFICATIONS

GROUP 1: Skilled wrecker (removing and salvaging of sash, windows and materials)

GROUP 2: Semi-skilled wrecker (salvaging of other building materials)

LABO0261-011 07/01/2023

SAN FRANCISCO AND SAN MATEO COUNTIES:

	Rates	Fringes
MASON TENDER, BRICK	$ 37.05	27.45

FOOTNOTES: Underground work such as sewers, manholes, catch basins, sewer pipes, telephone conduits, tunnels and cut trenches: $5.00 per day additional. Work in live sewage: $2.50 per day additional.

LABO0261-014 07/01/2023

SAN FRANCISCO AND SAN MATEO COUNTIES:

	Rates	Fringes
PLASTER TENDER	$ 41.93	30.32

Work on a swing stage scaffold: $1.00 per hour additional.

LABO0270-003 07/01/2023

AREA A: SANTA CLARA

AREA B: MONTEREY, SAN BENITO AND SANTA CRUZ COUNTIES

	Rates	Fringes
LABORER (TRAFFIC CONTROL/LANE CLOSURE)		
Escort Driver, Flag Person		
Area A	$ 37.26	27.30
Area B	$ 36.26	27.30
Traffic Control Person I		
Area A	$ 37.56	27.30
Area B	$ 36.56	27.30
Traffic Control Person II		
Area A	$ 35.06	27.30
Area B	$ 34.06	27.30

TRAFFIC CONTROL PERSON I: Layout of traffic control, crash cushions, construction area and roadside signage.

TRAFFIC CONTROL PERSON II: Installation and removal of temporary/permanent signs, markers, delineators and crash cushions.

LABO0270-004 06/26/2023

MONTEREY, SAN BENITO, SANTA CLARA, AND SANTA CRUZ COUNTIES

	Rates	Fringes
Tunnel and Shaft Laborers:		
GROUP 1	$ 45.89	27.72
GROUP 2	$ 45.66	27.72
GROUP 3	$ 45.41	27.72
GROUP 4	$ 44.96	27.72
GROUP 5	$ 44.42	27.72
Shotcrete Specialist	$ 46.41	27.72

TUNNEL AND SHAFT CLASSIFICATIONS

GROUP 1: Diamond driller; Groundmen; Gunite and shotcrete nozzlemen

GROUP 2: Rodmen; Shaft work & raise (below actual or excavated ground level)

GROUP 3: Bit grinder; Blaster, driller, powdermen, heading;

Cherry pickermen - where car is lifted; Concrete finisher in tunnel; Concrete screedman; Grout pumpman and potman; Gunite & shotcrete gunman & potman; Headermen; High pressure nozzleman; Miner - tunnel, including top and bottom man on shaft and raise work; Nipper; Nozzleman on slick line; Sandblaster - potman, Robotic Shotcrete Placer, Segment Erector, Tunnel Muck Hauler, Steel Form raiser and setter; Timberman, retimberman (wood or steel or substitute materials therefore); Tugger (for tunnel laborer work); Cable tender; Chuck tender; Powderman - primer house

GROUP 4: Vibrator operator, pavement breaker; Bull gang - muckers, trackmen; Concrete crew - includes rodding and spreading, Dumpmen (any method)

GROUP 5: Grout crew; Reboundman; Swamper/ Brakeman

LABO0270-005 07/01/2023

MONTEREY AND SAN BENITO COUNTIES

	Rates	Fringes
LABORER		
Mason Tender-Brick	$ 36.29	25.55

LABO0270-007 06/26/2023

MONTEREY, SAN BENITO AND SANTA CRUZ COUNTIES

	Rates	Fringes
LABORER (CONSTRUCTION CRAFT LABORERS - AREA B)		
Construction Specialist Group	$ 36.20	27.30
GROUP 1	$ 35.50	27.30
GROUP 1-a	$ 35.72	27.30
GROUP 1-c	$ 35.55	27.30
GROUP 1-e	$ 36.05	27.30
GROUP 1-f	$ 36.08	27.30
GROUP 2	$ 35.35	27.30
GROUP 3	$ 35.25	27.30
GROUP 4	$ 28.94	27.30

See groups 1-b and 1-d under laborer classifications.

LABORER (GARDENERS, HORTICULTURAL & LANDSCAPE LABORERS - AREA B)		
(1) New Construction	$ 35.25	27.30

(2) Establishment Warranty Period	$ 28.94	27.30
LABORER (GUNITE - AREA B)		
GROUP 1	$ 36.46	27.30
GROUP 2	$ 35.96	27.30
GROUP 3	$ 35.37	27.30
GROUP 4	$ 35.25	27.30
LABORER (WRECKING - AREA B)		
GROUP 1	$ 35.50	27.30
GROUP 2	$ 35.35	27.30

FOOTNOTES:

Laborers working off or with or from bos'n chairs, swinging scaffolds, belts shall receive $0.25 per hour above the applicable wage rate. This shall not apply to workers entitled to receive the wage rate set forth in Group 1-a below.

LABORER CLASSIFICATIONS

CONSTRUCTION SPECIALIST GROUP: Asphalt ironer and raker; Chainsaw; Laser beam in connection with laborers' work; Cast-in- place manhole form setter; Pressure pipelayer; Davis trencher - 300 or similar type (and all small trenchers); Blaster; Diamond driller; Multiple unit drill; Hydraulic drill

GROUP 1: Asphalt spreader boxes (all types); Barko, Wacker and similar type tampers; Buggymobile; Caulker, bander, pipewrapper, conduit layer, plastic pipelayer; Certified hazardous waste worker including Leade Abatement; Compactors of all types; Concrete and magnesite mixer, 1/2 yd. and under; Concrete pan work; Concrete sander; Concrete saw; Cribber and/or shoring; Cut granite curb setter; Dri-pak-it machine; Faller, logloader and bucker; Form raiser, slip forms; Green cutter; Headerboard, Hubsetter, aligner, by any method; High pressure blow pipe (1-1/2"" or over, 100 lbs. pressure/over); Hydro seeder and similar type; Jackhammer operator; Jacking of pipe over 12 inches; Jackson and similar type compactor; Kettle tender, pot and worker applying asphalt, lay-kold, creosote, lime, caustic and similar type materials (applying means applying, dipping or handling of such materials); Lagging, sheeting, whaling, bracing, trenchjacking, lagging hammer; Magnesite, epoxyresin, fiberglass, mastic worker (wet or dry); No joint pipe and stripping of same, including repair of voids; Pavement breaker and spader, including tool grinder;

Perma curb; Pipelayer (including grade checking in connection with pipelaying); Precast-manhole setter; Pressure pipe tester; Post hole digger, air, gas and electric; Power broom sweeper; Power tampers of all types (except as shown in Group 2); Ram set gun and stud gun; Riprap stonepaver and rock-slinger, including placing of sacked concrete and/or sand (wet or dry) and gabions and similar type; Rotary scarifier or multiple head concrete chipping scarifier; Roto and Ditch Witch; Rototiller; Sandblaster, pot, gun, nozzle operators; Signalling and rigging; Tank cleaner; Tree climber; Turbo blaster; Vibrascreed, bull float in connection with laborers' work; Vibrator; Hazardous waste worker (lead removal); Asbestos and mold removal worker

GROUP 1-a: Joy drill model TWM-2A; Gardner-Denver model DH143 and similar type drills; Track driller; Jack leg driller; Wagon driller; Mechanical drillers, all types regardless of type or method of power; Mechanical pipe layers, all types regardless of type or method of power; Blaster and powder; All work of loading, placing and blasting of all powder and explosives of whatever type regardless of method used for such loading and placing; High scalers (including drilling of same); Tree topper; Bit grinder

GROUP 1-b: Sewer cleaners shall receive $4.00 per day above Group 1 wage rates. ""Sewer cleaner"" means any worker who handles or comes in contact with raw sewage in small diameter sewers. Those who work inside recently active, large diameter sewers, and all recently active sewer manholes shal receive $5.00 per day above Group 1 wage rates.

GROUP 1-c: Burning and welding in connection with laborers' work; Synthetic thermoplastics and similar type welding

GROUP 1-d: Maintenance and repair track and road beds. All employees performing work covered herein shall receive $ .25 per hour above their regular rate for all work performed on underground structures not specifically covered herein. This paragraph shall not be construed to apply to work below ground level in open cut. It shall apply to cut and cover work of subway construction after the temporary cover has been placed.

GROUP 1-e: Work on and/or in bell hole footings and shafts thereof, and work on and in deep footings. (A deep footing is a hole 15 feet or more in depth.) In the event the depth of the footing is unknown at the commencement of excavation, and the final depth exceeds 15 feet, the deep

footing wage rate would apply to all employees for each and every day worked on or in the excavation of the footing from the date of inception.

GROUP 1-f: Wire winding machine in connection with guniting or shot crete

GROUP 2: Asphalt shoveler; Cement dumper and handling dry cement or gypsum; Choke-setter and rigger (clearing work); Concrete bucket dumper and chute; Concrete chipping and grinding; Concrete laborer (wet or dry); Driller tender, chuck tender, nipper; Guinea chaser (stake), grout crew; High pressure nozzle, adductor; Hydraulic monitor (over 100 lbs. pressure); Loading and unloading, carrying and hauling of all rods and materials for use in reinforcing concrete construction; Pittsburgh chipper and similar type brush shredders; Sloper; Single foot, hand-held, pneumatic tamper; All pneumatic, air, gas and electric tools not listed in Groups 1 through 1-f; Jacking of pipe - under 12 inches

GROUP 3: Construction laborers, including bridge and general laborer; Dump, load spotter; Flag person; Fire watcher; Fence erector; Guardrail erector; Gardener, horticultural and landscape laborer; Jetting; Limber, brush loader and piler; Pavement marker (button setter); Maintenance, repair track and road beds; Streetcar and railroad construction track laborer; Temporary air and water lines, Victaulic or similar; Tool room attendant (jobsite only)

GROUP 4: Final clean-up work of debris, grounds and building including but not limited to: street cleaner; cleaning and washing windows; brick cleaner (jobsite only); material cleaner (jobsite only). The classification ""material cleaner"" is to be utilized under the following conditions:
A: at demolition site for the salvage of the material.
B: at the conclusion of a job where the material is to be salvaged and stocked to be reused on another job.
C: for the cleaning of salvage material at the jobsite or temporary jobsite yard.

The material cleaner classification should not be used in the performance of ""form stripping, cleaning and oiling and moving to the next point of erection"".

GUNITE LABORER CLASSIFICATIONS

GROUP 1: Structural Nozzleman

GROUP 2: Nozzleman, Gunman, Potman, Groundman

GROUP 3: Reboundman

GROUP 4: Gunite laborer

WRECKING WORK LABORER CLASSIFICATIONS

GROUP 1: Skilled wrecker (removing and salvaging of sash, windows and materials)

GROUP 2: Semi-skilled wrecker (salvaging of other building materials)

LABO0270-010 06/26/2023

SANTA CLARA COUNTY

	Rates	Fringes
LABORER (CONSTRUCTION CRAFT LABORERS - AREA A:)		
Construction Specialist Group	$ 37.20	27.30
GROUP 1	$ 36.50	27.30
GROUP 1-a	$ 36.72	27.30
GROUP 1-c	$ 36.55	27.30
GROUP 1-e	$ 37.05	27.30
GROUP 1-f	$ 37.08	27.30
GROUP 2	$ 36.35	27.30
GROUP 3	$ 36.25	27.30
GROUP 4	$ 29.94	27.30
See groups 1-b and 1-d under laborer classifications.		
LABORER (GARDENERS, HORTICULTURAL & LANDSCAPE LABORERS - AREA A:)		
(1) New Construction	$ 36.25	27.30
(2) Establishment Warranty Period	$ 29.94	27.30
LABORER (GUNITE - AREA A:)		
GROUP 1	$ 37.46	27.30
GROUP 2	$ 36.96	27.30
GROUP 3	$ 36.37	27.30
GROUP 4	$ 36.25	27.30
LABORER (WRECKING - AREA A:)		
GROUP 1	$ 36.50	27.30

GROUP 2.....$ 36.35 27.30

FOOTNOTES:

Laborers working off or with or from bos'n chairs, swinging scaffolds, belts shall receive $0.25 per hour above the applicable wage rate. This shall not apply to workers entitled to receive the wage rate set forth in Group 1-a below.

LABORER CLASSIFICATIONS

CONSTRUCTION SPECIALIST GROUP: Asphalt ironer and raker; Chainsaw; Laser beam in connection with laborers' work; Cast-in- place manhole form setter; Pressure pipelayer; Davis trencher - 300 or similar type (and all small trenchers); Blaster; Diamond driller; Multiple unit drill; Hydraulic drill

GROUP 1: Asphalt spreader boxes (all types); Barko, Wacker and similar type tampers; Buggymobile; Caulker, bander, pipewrapper, conduit layer, plastic pipelayer; Certified hazardous waste worker including Leade Abatement; Compactors of all types; Concrete and magnesite mixer, 1/2 yd. and under; Concrete pan work; Concrete sander; Concrete saw; Cribber and/or shoring; Cut granite curb setter; Dri-pak-it machine; Faller, logloader and bucker; Form raiser, slip forms; Green cutter; Headerboard, Hubsetter, aligner, by any method; High pressure blow pipe (1-1/2"" or over, 100 lbs. pressure/over); Hydro seeder and similar type; Jackhammer operator; Jacking of pipe over 12 inches; Jackson and similar type compactor; Kettle tender, pot and worker applying asphalt, lay-kold, creosote, lime, caustic and similar type materials (applying means applying, dipping or handling of such materials); Lagging, sheeting, whaling, bracing, trenchjacking, lagging hammer; Magnesite, epoxyresin, fiberglass, mastic worker (wet or dry); No joint pipe and stripping of same, including repair of voids; Pavement breaker and spader, including tool grinder; Perma curb; Pipelayer (including grade checking in connection with pipelaying); Precast-manhole setter; Pressure pipe tester; Post hole digger, air, gas and electric; Power broom sweeper; Power tampers of all types (except as shown in Group 2); Ram set gun and stud gun; Riprap stonepaver and rock-slinger, including placing of sacked concrete and/or sand (wet or dry) and gabions and similar type; Rotary scarifier or multiple head concrete chipping scarifier; Roto and Ditch Witch; Rototiller;

Sandblaster, pot, gun, nozzle operators; Signalling and rigging; Tank cleaner; Tree climber; Turbo blaster; Vibrascreed, bull float in connection with laborers' work; Vibrator; Hazardous waste worker (lead removal); Asbestos and mold removal worker

GROUP 1-a: Joy drill model TWM-2A; Gardner-Denver model DH143 and similar type drills; Track driller; Jack leg driller; Wagon driller; Mechanical drillers, all types regardless of type or method of power; Mechanical pipe layers, all types regardless of type or method of power; Blaster and powder; All work of loading, placing and blasting of all powder and explosives of whatever type regardless of method used for such loading and placing; High scalers (including drilling of same); Tree topper; Bit grinder

GROUP 1-b: Sewer cleaners shall receive $4.00 per day above Group 1 wage rates. ""Sewer cleaner"" means any worker who handles or comes in contact with raw sewage in small diameter sewers. Those who work inside recently active, large diameter sewers, and all recently active sewer manholes shal receive $5.00 per day above Group 1 wage rates.

GROUP 1-c: Burning and welding in connection with laborers' work; Synthetic thermoplastics and similar type welding

GROUP 1-d: Maintenance and repair track and road beds. All employees performing work covered herein shall receive $ .25 per hour above their regular rate for all work performed on underground structures not specifically covered herein. This paragraph shall not be construed to apply to work below ground level in open cut. It shall apply to cut and cover work of subway construction after the temporary cover has been placed.

GROUP 1-e: Work on and/or in bell hole footings and shafts thereof, and work on and in deep footings. (A deep footing is a hole 15 feet or more in depth.) In the event the depth of the footing is unknown at the commencement of excavation, and the final depth exceeds 15 feet, the deep footing wage rate would apply to all employees for each and every day worked on or in the excavation of the footing from the date of inception.

GROUP 1-f: Wire winding machine in connection with guniting or shot crete

GROUP 2: Asphalt shoveler; Cement dumper and handling dry cement or gypsum; Choke-setter and rigger (clearing work);

Concrete bucket dumper and chute; Concrete chipping and grinding; Concrete laborer (wet or dry); Driller tender, chuck tender, nipper; Guinea chaser (stake), grout crew; High pressure nozzle, adductor; Hydraulic monitor (over 100 lbs. pressure); Loading and unloading, carrying and hauling of all rods and materials for use in reinforcing concrete construction; Pittsburgh chipper and similar type brush shredders; Sloper; Single foot, hand-held, pneumatic tamper; All pneumatic, air, gas and electric tools not listed in Groups 1 through 1-f; Jacking of pipe - under 12 inches

GROUP 3: Construction laborers, including bridge and general laborer; Dump, load spotter; Flag person; Fire watcher; Fence erector; Guardrail erector; Gardener, horticultural and landscape laborer; Jetting; Limber, brush loader and piler; Pavement marker (button setter); Maintenance, repair track and road beds; Streetcar and railroad construction track laborer; Temporary air and water lines, Victaulic or similar; Tool room attendant (jobsite only)

GROUP 4: Final clean-up work of debris, grounds and building including but not limited to: street cleaner; cleaning and washing windows; brick cleaner (jobsite only); material cleaner (jobsite only). The classification ""material cleaner"" is to be utilized under the following conditions:
A: at demolition site for the salvage of the material.
B: at the conclusion of a job where the material is to be salvaged and stocked to be reused on another job.
C: for the cleaning of salvage material at the jobsite or temporary jobsite yard.

The material cleaner classification should not be used in the performance of ""form stripping, cleaning and oiling and moving to the next point of erection"".

GUNITE LABORER CLASSIFICATIONS

GROUP 1: Structural Nozzleman

GROUP 2: Nozzleman, Gunman, Potman, Groundman

GROUP 3: Reboundman

GROUP 4: Gunite laborer

WRECKING WORK LABORER CLASSIFICATIONS

GROUP 1: Skilled wrecker (removing and salvaging of sash, windows and materials)

GROUP 2: Semi-skilled wrecker (salvaging of other building materials)

LABO0270-011 07/01/2023

MONTEREY, SAN BENITO, SANTA CRUZ, SANTA CLARA COUNTIES

	Rates	Fringes
LABORER (Plaster Tender).....	$ 40.68	29.68

Work on a swing stage scaffold: $1.00 per hour additional.

LABO0294-001 07/01/2023

FRESNO, KINGS AND MADERA COUNTIES

	Rates	Fringes
LABORER (Brick)		
Mason Tender-Brick.....	$ 36.29	25.55

LABO0294-002 07/01/2023

FRESNO, KINGS, AND MADERA COUNTIES

	Rates	Fringes
LABORER (TRAFFIC CONTROL/LANE CLOSURE)		
Escort Driver, Flag Person..	$ 36.26	27.30
Traffic Control Person I....	$ 36.56	27.30
Traffic Control Person II...	$ 34.06	27.30

TRAFFIC CONTROL PERSON I: Layout of traffic control, crash cushions, construction area and roadside signage.

TRAFFIC CONTROL PERSON II: Installation and removal of temporary/permanent signs, markers, delineators and crash cushions.

LABO0294-005 06/26/2023

FRESNO, KINGS, AND MADERA COUNTIES

	Rates	Fringes
Tunnel and Shaft Laborers:		
GROUP 1	$ 45.89	27.72
GROUP 2	$ 45.66	27.72
GROUP 3	$ 45.41	27.72
GROUP 4	$ 44.96	27.72
GROUP 5	$ 44.42	27.72
Shotcrete Specialist	$ 46.41	27.72

TUNNEL AND SHAFT CLASSIFICATIONS

GROUP 1: Diamond driller; Groundmen; Gunite and shotcrete nozzlemen

GROUP 2: Rodmen; Shaft work & raise (below actual or excavated ground level)

GROUP 3: Bit grinder; Blaster, driller, powdermen, heading; Cherry pickermen - where car is lifted; Concrete finisher in tunnel; Concrete screedman; Grout pumpman and potman; Gunite & shotcrete gunman & potman; Headermen; High pressure nozzleman; Miner - tunnel, including top and bottom man on shaft and raise work; Nipper; Nozzleman on slick line; Sandblaster - potman, Robotic Shotcrete Placer, Segment Erector, Tunnel Muck Hauler, Steel Form raiser and setter; Timberman, retimberman (wood or steel or substitute materials therefore); Tugger (for tunnel laborer work); Cable tender; Chuck tender; Powderman - primer house

GROUP 4: Vibrator operator, pavement breaker; Bull gang - muckers, trackmen; Concrete crew - includes rodding and spreading, Dumpmen (any method)

GROUP 5: Grout crew; Reboundman; Swamper/ Brakeman

LABO0294-008 06/26/2023

FRESNO, KINGS, AND MADERA COUNTIES

	Rates	Fringes
LABORER (CONSTRUCTION CRAFT LABORERS - AREA B:)		
Construction Specialist Group	$ 36.20	27.30
GROUP 1	$ 35.50	27.30

GROUP 1-a.....$ 35.72 27.30
GROUP 1-c.....$ 35.55 27.30
GROUP 1-e.....$ 36.05 27.30
GROUP 1-f.....$ 36.08 27.30
GROUP 2.....$ 35.35 27.30
GROUP 3.....$ 35.25 27.30
GROUP 4.....$ 28.94 27.30

See groups 1-b and 1-d under laborer classifications.

LABORER (GARDENERS,
HORTICULTURAL & LANDSCAPE
LABORERS - AREA B:)

(1) New Construction.....$ 35.25 27.30
(2) Establishment Warranty
Period.....$ 28.94 27.30

LABORER (GUNITE - AREA B:)

GROUP 1.....$ 36.46 27.30
GROUP 2.....$ 35.96 27.30
GROUP 3.....$ 35.37 27.30
GROUP 4.....$ 35.25 27.30

LABORER (WRECKING - AREA B:)

GROUP 1.....$ 35.50 27.30
GROUP 2.....$ 35.35 27.30

FOOTNOTES:

Laborers working off or with or from bos'n chairs, swinging scaffolds, belts shall receive $0.25 per hour above the applicable wage rate. This shall not apply to workers entitled to receive the wage rate set forth in Group 1-a below.

LABORER CLASSIFICATIONS

CONSTRUCTION SPECIALIST GROUP: Asphalt ironer and raker; Chainsaw; Laser beam in connection with laborers' work; Cast-in- place manhole form setter; Pressure pipelayer; Davis trencher - 300 or similar type (and all small trenchers); Blaster; Diamond driller; Multiple unit drill; Hydraulic drill

GROUP 1: Asphalt spreader boxes (all types); Barko, Wacker and similar type tampers; Buggymobile; Caulker, bander, pipewrapper, conduit layer, plastic pipelayer; Certified hazardous waste worker including Leade Abatement; Compactors of all types; Concrete and magnesite mixer, 1/2 yd. and under; Concrete pan work; Concrete sander; Concrete saw; Cribber and/or shoring; Cut granite curb setter; Dri-pak-it machine; Faller, logloader and bucker; Form

raiser, slip forms; Green cutter; Headerboard, Hubsetter, aligner, by any method; High pressure blow pipe (1-1/2"" or over, 100 lbs. pressure/over); Hydro seeder and similar type; Jackhammer operator; Jacking of pipe over 12 inches; Jackson and similar type compactor; Kettle tender, pot and worker applying asphalt, lay-kold, creosote, lime, caustic and similar type materials (applying means applying, dipping or handling of such materials); Lagging, sheeting, whaling, bracing, trenchjacking, lagging hammer; Magnesite, epoxyresin, fiberglass, mastic worker (wet or dry); No joint pipe and stripping of same, including repair of voids; Pavement breaker and spader, including tool grinder; Perma curb; Pipelayer (including grade checking in connection with pipelaying); Precast-manhole setter; Pressure pipe tester; Post hole digger, air, gas and electric; Power broom sweeper; Power tampers of all types (except as shown in Group 2); Ram set gun and stud gun; Riprap stonepaver and rock-slinger, including placing of sacked concrete and/or sand (wet or dry) and gabions and similar type; Rotary scarifier or multiple head concrete chipping scarifier; Roto and Ditch Witch; Rototiller; Sandblaster, pot, gun, nozzle operators; Signalling and rigging; Tank cleaner; Tree climber; Turbo blaster; Vibrascreed, bull float in connection with laborers' work; Vibrator; Hazardous waste worker (lead removal); Asbestos and mold removal worker

GROUP 1-a: Joy drill model TWM-2A; Gardner-Denver model DH143 and similar type drills; Track driller; Jack leg driller; Wagon driller; Mechanical drillers, all types regardless of type or method of power; Mechanical pipe layers, all types regardless of type or method of power; Blaster and powder; All work of loading, placing and blasting of all powder and explosives of whatever type regardless of method used for such loading and placing; High scalers (including drilling of same); Tree topper; Bit grinder

GROUP 1-b: Sewer cleaners shall receive $4.00 per day above Group 1 wage rates. ""Sewer cleaner"" means any worker who handles or comes in contact with raw sewage in small diameter sewers. Those who work inside recently active, large diameter sewers, and all recently active sewer manholes shal receive $5.00 per day above Group 1 wage rates.

GROUP 1-c: Burning and welding in connection with laborers' work; Synthetic thermoplastics and similar type welding

GROUP 1-d: Maintenance and repair track and road beds. All employees performing work covered herein shall receive $

.25 per hour above their regular rate for all work performed on underground structures not specifically covered herein. This paragraph shall not be construed to apply to work below ground level in open cut. It shall apply to cut and cover work of subway construction after the temporary cover has been placed.

GROUP 1-e: Work on and/or in bell hole footings and shafts thereof, and work on and in deep footings. (A deep footing is a hole 15 feet or more in depth.) In the event the depth of the footing is unknown at the commencement of excavation, and the final depth exceeds 15 feet, the deep footing wage rate would apply to all employees for each and every day worked on or in the excavation of the footing from the date of inception.

GROUP 1-f: Wire winding machine in connection with guniting or shot crete

GROUP 2: Asphalt shoveler; Cement dumper and handling dry cement or gypsum; Choke-setter and rigger (clearing work); Concrete bucket dumper and chute; Concrete chipping and grinding; Concrete laborer (wet or dry); Driller tender, chuck tender, nipper; Guinea chaser (stake), grout crew; High pressure nozzle, adductor; Hydraulic monitor (over 100 lbs. pressure); Loading and unloading, carrying and hauling of all rods and materials for use in reinforcing concrete construction; Pittsburgh chipper and similar type brush shredders; Sloper; Single foot, hand-held, pneumatic tamper; All pneumatic, air, gas and electric tools not listed in Groups 1 through 1-f; Jacking of pipe - under 12 inches

GROUP 3: Construction laborers, including bridge and general laborer; Dump, load spotter; Flag person; Fire watcher; Fence erector; Guardrail erector; Gardener, horticultural and landscape laborer; Jetting; Limber, brush loader and piler; Pavement marker (button setter); Maintenance, repair track and road beds; Streetcar and railroad construction track laborer; Temporary air and water lines, Victaulic or similar; Tool room attendant (jobsite only)

GROUP 4: Final clean-up work of debris, grounds and building including but not limited to: street cleaner; cleaning and washing windows; brick cleaner (jobsite only); material cleaner (jobsite only). The classification ""material cleaner"" is to be utilized under the following conditions:

A: at demolition site for the salvage of the material.

B: at the conclusion of a job where the material is to be salvaged and stocked to be reused on another job.

C: for the cleaning of salvage material at the jobsite or temporary jobsite yard.

The material cleaner classification should not be used in the performance of ""form stripping, cleaning and oiling and moving to the next point of erection"".

GUNITE LABORER CLASSIFICATIONS

GROUP 1: Structural Nozzleman

GROUP 2: Nozzleman, Gunman, Potman, Groundman

GROUP 3: Reboundman

GROUP 4: Gunite laborer

WRECKING WORK LABORER CLASSIFICATIONS

GROUP 1: Skilled wrecker (removing and salvaging of sash, windows and materials)

GROUP 2: Semi-skilled wrecker (salvaging of other building materials)

LABO0294-010 07/01/2023

CALAVERAS, FRESNO, KINGS, MADERA, MARIPOSA, MERCED, SAN JOAQUIN, STANISLAUS & TUOLUMNE

	Rates	Fringes
Plasterer tender.....	$ 39.77	28.54

Work on a swing stage scaffold: $1.00 per hour additional.

LABO0294-011 07/01/2023

FRESNO, KINGS, AND MADERA COUNTIES

	Rates	Fringes
LABORER (Plaster Tender).....	$ 39.77	28.54

Work on a swing stage scaffold: $1.00 per hour additional.

LABO0304-002 07/01/2023

ALAMEDA COUNTY

	Rates	Fringes
LABORER (TRAFFIC CONTROL/LANE CLOSURE)		
Escort Driver, Flag Person..	$ 37.26	27.30
Traffic Control Person I....	$ 37.56	27.30
Traffic Control Person II...	$ 35.06	27.30

TRAFFIC CONTROL PERSON I: Layout of traffic control, crash cushions, construction area and roadside signage.

TRAFFIC CONTROL PERSON II: Installation and removal of temporary/permanent signs, markers, delineators and crash cushions.

LABO0304-003 06/26/2023

ALAMEDA COUNTY

	Rates	Fringes
Tunnel and Shaft Laborers:		
GROUP 1.....	$ 45.89	27.72
GROUP 2.....	$ 45.66	27.72
GROUP 3.....	$ 45.41	27.72
GROUP 4.....	$ 44.96	27.72
GROUP 5.....	$ 44.42	27.72
Shotcrete Specialist.....	$ 46.41	27.72

TUNNEL AND SHAFT CLASSIFICATIONS

GROUP 1: Diamond driller; Groundmen; Gunite and shotcrete nozzlemen

GROUP 2: Rodmen; Shaft work & raise (below actual or excavated ground level)

GROUP 3: Bit grinder; Blaster, driller, powdermen, heading; Cherry pickermen - where car is lifted; Concrete finisher in tunnel; Concrete screedman; Grout pumpman and potman; Gunite & shotcrete gunman & potman; Headermen; High pressure nozzleman; Miner - tunnel, including top and bottom man on shaft and raise work; Nipper; Nozzleman on

slick line; Sandblaster - potman, Robotic Shotcrete Placer, Segment Erector, Tunnel Muck Hauler, Steel Form raiser and setter; Timberman, retimberman (wood or steel or substitute materials therefore); Tugger (for tunnel laborer work); Cable tender; Chuck tender; Powderman - primer house

GROUP 4: Vibrator operator, pavement breaker; Bull gang - muckers, trackmen; Concrete crew - includes rodding and spreading, Dumpmen (any method)

GROUP 5: Grout crew; Reboundman; Swamper/ Brakeman

LABO0304-004 06/26/2023

ALAMEDA COUNTY

	Rates	Fringes
LABORER (CONSTRUCTION CRAFT LABORERS - AREA A:)		
Construction Specialist Group	$ 37.20	27.30
GROUP 1	$ 36.50	27.30
GROUP 1-a	$ 36.72	27.30
GROUP 1-c	$ 36.55	27.30
GROUP 1-e	$ 37.05	27.30
GROUP 1-f	$ 37.08	27.30
GROUP 2	$ 36.35	27.30
GROUP 3	$ 36.25	27.30
GROUP 4	$ 29.94	27.30
See groups 1-b and 1-d under laborer classifications.		
LABORER (GARDENERS, HORTICULTURAL & LANDSCAPE LABORERS - AREA A:)		
(1) New Construction	$ 36.25	27.30
(2) Establishment Warranty Period	$ 29.94	27.30
LABORER (GUNITE - AREA A:)		
GROUP 1	$ 37.46	27.30
GROUP 2	$ 36.96	27.30
GROUP 3	$ 36.37	27.30
GROUP 4	$ 36.25	27.30
LABORER (WRECKING - AREA A:)		
GROUP 1	$ 36.50	27.30
GROUP 2	$ 36.35	27.30

FOOTNOTES:

Laborers working off or with or from bos'n chairs, swinging scaffolds, belts shall receive $0.25 per hour above the

applicable wage rate. This shall not apply to workers entitled to receive the wage rate set forth in Group 1-a below.

LABORER CLASSIFICATIONS

CONSTRUCTION SPECIALIST GROUP: Asphalt ironer and raker; Chainsaw; Laser beam in connection with laborers' work; Cast-in- place manhole form setter; Pressure pipelayer; Davis trencher - 300 or similar type (and all small trenchers); Blaster; Diamond driller; Multiple unit drill; Hydraulic drill

GROUP 1: Asphalt spreader boxes (all types); Barko, Wacker and similar type tampers; Buggymobile; Caulker, bander, pipewrapper, conduit layer, plastic pipelayer; Certified hazardous waste worker including Leade Abatement; Compactors of all types; Concrete and magnesite mixer, 1/2 yd. and under; Concrete pan work; Concrete sander; Concrete saw; Cribber and/or shoring; Cut granite curb setter; Dri-pak-it machine; Faller, logloader and bucker; Form raiser, slip forms; Green cutter; Headerboard, Hubsetter, aligner, by any method; High pressure blow pipe (1-1/2"" or over, 100 lbs. pressure/over); Hydro seeder and similar type; Jackhammer operator; Jacking of pipe over 12 inches; Jackson and similar type compactor; Kettle tender, pot and worker applying asphalt, lay-kold, creosote, lime, caustic and similar type materials (applying means applying, dipping or handling of such materials); Lagging, sheeting, whaling, bracing, trenchjacking, lagging hammer; Magnesite, epoxyresin, fiberglass, mastic worker (wet or dry); No joint pipe and stripping of same, including repair of voids; Pavement breaker and spader, including tool grinder; Perma curb; Pipelayer (including grade checking in connection with pipelaying); Precast-manhole setter; Pressure pipe tester; Post hole digger, air, gas and electric; Power broom sweeper; Power tampers of all types (except as shown in Group 2); Ram set gun and stud gun; Riprap stonepaver and rock-slinger, including placing of sacked concrete and/or sand (wet or dry) and gabions and similar type; Rotary scarifier or multiple head concrete chipping scarifier; Roto and Ditch Witch; Rototiller; Sandblaster, pot, gun, nozzle operators; Signalling and rigging; Tank cleaner; Tree climber; Turbo blaster; Vibrascreed, bull float in connection with laborers' work; Vibrator; Hazardous waste worker (lead removal); Asbestos and mold removal worker

GROUP 1-a: Joy drill model TWM-2A; Gardner-Denver model DH143 and similar type drills; Track driller; Jack leg driller; Wagon driller; Mechanical drillers, all types regardless of type or method of power; Mechanical pipe layers, all types regardless of type or method of power; Blaster and powder; All work of loading, placing and blasting of all powder and explosives of whatever type regardless of method used for such loading and placing; High scalers (including drilling of same); Tree topper; Bit grinder

GROUP 1-b: Sewer cleaners shall receive $4.00 per day above Group 1 wage rates. ""Sewer cleaner"" means any worker who handles or comes in contact with raw sewage in small diameter sewers. Those who work inside recently active, large diameter sewers, and all recently active sewer manholes shal receive $5.00 per day above Group 1 wage rates.

GROUP 1-c: Burning and welding in connection with laborers' work; Synthetic thermoplastics and similar type welding

GROUP 1-d: Maintenance and repair track and road beds. All employees performing work covered herein shall receive $ .25 per hour above their regular rate for all work performed on underground structures not specifically covered herein. This paragraph shall not be construed to apply to work below ground level in open cut. It shall apply to cut and cover work of subway construction after the temporary cover has been placed.

GROUP 1-e: Work on and/or in bell hole footings and shafts thereof, and work on and in deep footings. (A deep footing is a hole 15 feet or more in depth.) In the event the depth of the footing is unknown at the commencement of excavation, and the final depth exceeds 15 feet, the deep footing wage rate would apply to all employees for each and every day worked on or in the excavation of the footing from the date of inception.

GROUP 1-f: Wire winding machine in connection with guniting or shot crete

GROUP 2: Asphalt shoveler; Cement dumper and handling dry cement or gypsum; Choke-setter and rigger (clearing work); Concrete bucket dumper and chute; Concrete chipping and grinding; Concrete laborer (wet or dry); Driller tender, chuck tender, nipper; Guinea chaser (stake), grout crew; High pressure nozzle, adductor; Hydraulic monitor (over 100 lbs. pressure); Loading and unloading, carrying and hauling

of all rods and materials for use in reinforcing concrete construction; Pittsburgh chipper and similar type brush shredders; Sloper; Single foot, hand-held, pneumatic tamper; All pneumatic, air, gas and electric tools not listed in Groups 1 through 1-f; Jacking of pipe - under 12 inches

GROUP 3: Construction laborers, including bridge and general laborer; Dump, load spotter; Flag person; Fire watcher; Fence erector; Guardrail erector; Gardener, horticultural and landscape laborer; Jetting; Limber, brush loader and piler; Pavement marker (button setter); Maintenance, repair track and road beds; Streetcar and railroad construction track laborer; Temporary air and water lines, Victaulic or similar; Tool room attendant (jobsite only)

GROUP 4: Final clean-up work of debris, grounds and building including but not limited to: street cleaner; cleaning and washing windows; brick cleaner (jobsite only); material cleaner (jobsite only). The classification ""material cleaner"" is to be utilized under the following conditions:
A: at demolition site for the salvage of the material.
B: at the conclusion of a job where the material is to be salvaged and stocked to be reused on another job.
C: for the cleaning of salvage material at the jobsite or temporary jobsite yard.

The material cleaner classification should not be used in the performance of ""form stripping, cleaning and oiling and moving to the next point of erection"".

GUNITE LABORER CLASSIFICATIONS

GROUP 1: Structural Nozzleman

GROUP 2: Nozzleman, Gunman, Potman, Groundman

GROUP 3: Reboundman

GROUP 4: Gunite laborer

WRECKING WORK LABORER CLASSIFICATIONS

GROUP 1: Skilled wrecker (removing and salvaging of sash, windows and materials)

GROUP 2: Semi-skilled wrecker (salvaging of other building materials)

LABO0304-005 07/01/2023

ALAMEDA COUNTY

	Rates	Fringes
Brick Tender.....	$ 37.05	27.45

FOOTNOTES: Work on jobs where heat-protective clothing is required: $2.00 per hour additional. Work at grinders: $.25 per hour additional. Manhole work: $2.00 per day additional.

LABO0304-008 07/01/2023

ALAMEDA AND CONTRA COSTA COUNTIES:

	Rates	Fringes
Plasterer tender.....	$ 41.93	30.32

Work on a swing stage scaffold: $1.00 per hour additional.

LABO0324-002 07/01/2023

CONTRA COSTA COUNTY

	Rates	Fringes
LABORER (TRAFFIC CONTROL/LANE CLOSURE)		
Escort Driver, Flag Person..	$ 37.26	27.30
Traffic Control Person I....	$ 37.56	27.30
Traffic Control Person II...	$ 35.06	27.30

TRAFFIC CONTROL PERSON I: Layout of traffic control, crash cushions, construction area and roadside signage.

TRAFFIC CONTROL PERSON II: Installation and removal of temporary/permanent signs, markers, delineators and crash cushions.

LABO0324-006 06/26/2023

CONTRA COSTA COUNTY

	Rates	Fringes
Tunnel and Shaft Laborers:		
GROUP 1	$ 45.89	27.72
GROUP 2	$ 45.66	27.72
GROUP 3	$ 45.41	27.72
GROUP 4	$ 44.96	27.72
GROUP 5	$ 44.42	27.72
Shotcrete Specialist	$ 46.41	27.72

TUNNEL AND SHAFT CLASSIFICATIONS

GROUP 1: Diamond driller; Groundmen; Gunite and shotcrete nozzlemen

GROUP 2: Rodmen; Shaft work & raise (below actual or excavated ground level)

GROUP 3: Bit grinder; Blaster, driller, powdermen, heading; Cherry pickermen - where car is lifted; Concrete finisher in tunnel; Concrete screedman; Grout pumpman and potman; Gunite & shotcrete gunman & potman; Headermen; High pressure nozzleman; Miner - tunnel, including top and bottom man on shaft and raise work; Nipper; Nozzleman on slick line; Sandblaster - potman, Robotic Shotcrete Placer, Segment Erector, Tunnel Muck Hauler, Steel Form raiser and setter; Timberman, retimberman (wood or steel or substitute materials therefore); Tugger (for tunnel laborer work); Cable tender; Chuck tender; Powderman - primer house

GROUP 4: Vibrator operator, pavement breaker; Bull gang - muckers, trackmen; Concrete crew - includes rodding and spreading, Dumpmen (any method)

GROUP 5: Grout crew; Reboundman; Swamper/ Brakeman

LABO0324-012 06/26/2023

CONTRA COSTA COUNTY

	Rates	Fringes
LABORER (CONSTRUCTION CRAFT LABORERS - AREA A:)		
Construction Specialist Group	$ 37.20	27.30
GROUP 1	$ 36.50	27.30
GROUP 1-a	$ 36.72	27.30

GROUP 1-c.....$ 36.55 27.30
GROUP 1-e.....$ 37.05 27.30
GROUP 1-f.....$ 37.08 27.30
GROUP 1-g.....$ 36.70 27.30
GROUP 2.....$ 36.35 27.30
GROUP 3.....$ 36.25 27.30
GROUP 4.....$ 29.94 27.30

See groups 1-b and 1-d under laborer classifications.

LABORER (GARDENERS,
HORTICULURAL & LANDSCAPE
LABORERS - AREA A:)

(1) New Construction.....$ 36.25 27.30
(2) Establishment Warranty
Period.....$ 29.94 27.30

LABORER (GUNITE - AREA A:)

GROUP 1.....$ 37.46 27.30
GROUP 2.....$ 36.96 27.30
GROUP 3.....$ 36.37 27.30
GROUP 4.....$ 36.25 27.30

LABORER (WRECKING - AREA A:)

GROUP 1.....$ 36.50 27.30
GROUP 2.....$ 36.35 27.30

FOOTNOTES:

Laborers working off or with or from bos'n chairs, swinging scaffolds, belts shall receive $0.25 per hour above the applicable wage rate. This shall not apply to workers entitled to receive the wage rate set forth in Group 1-a below.

LABORER CLASSIFICATIONS

CONSTRUCTION SPECIALIST GROUP: Asphalt ironer and raker; Chainsaw; Laser beam in connection with laborers' work; Cast-in- place manhole form setter; Pressure pipelayer; Davis trencher - 300 or similar type (and all small trenchers); Blaster; Diamond driller; Multiple unit drill; Hydraulic drill

GROUP 1: Asphalt spreader boxes (all types); Barko, Wacker and similar type tampers; Buggymobile; Caulker, bander, pipewrapper, conduit layer, plastic pipelayer; Certified hazardous waste worker including Leade Abatement; Compactors of all types; Concrete and magnesite mixer, 1/2 yd. and under; Concrete pan work; Concrete sander; Concrete saw; Cribber and/or shoring; Cut granite curb setter; Dri-pak-it machine; Faller, logloader and bucker; Form

raiser, slip forms; Green cutter; Headerboard, Hubsetter, aligner, by any method; High pressure blow pipe (1-1/2"" or over, 100 lbs. pressure/over); Hydro seeder and similar type; Jackhammer operator; Jacking of pipe over 12 inches; Jackson and similar type compactor; Kettle tender, pot and worker applying asphalt, lay-kold, creosote, lime, caustic and similar type materials (applying means applying, dipping or handling of such materials); Lagging, sheeting, whaling, bracing, trenchjacking, lagging hammer; Magnesite, epoxyresin, fiberglass, mastic worker (wet or dry); No joint pipe and stripping of same, including repair of voids; Pavement breaker and spader, including tool grinder; Perma curb; Pipelayer (including grade checking in connection with pipelaying); Precast-manhole setter; Pressure pipe tester; Post hole digger, air, gas and electric; Power broom sweeper; Power tampers of all types (except as shown in Group 2); Ram set gun and stud gun; Riprap stonepaver and rock-slinger, including placing of sacked concrete and/or sand (wet or dry) and gabions and similar type; Rotary scarifier or multiple head concrete chipping scarifier; Roto and Ditch Witch; Rototiller; Sandblaster, pot, gun, nozzle operators; Signalling and rigging; Tank cleaner; Tree climber; Turbo blaster; Vibrascreed, bull float in connection with laborers' work; Vibrator; Hazardous waste worker (lead removal); Asbestos and mold removal worker

GROUP 1-a: Joy drill model TWM-2A; Gardner-Denver model DH143 and similar type drills; Track driller; Jack leg driller; Wagon driller; Mechanical drillers, all types regardless of type or method of power; Mechanical pipe layers, all types regardless of type or method of power; Blaster and powder; All work of loading, placing and blasting of all powder and explosives of whatever type regardless of method used for such loading and placing; High scalers (including drilling of same); Tree topper; Bit grinder

GROUP 1-b: Sewer cleaners shall receive $4.00 per day above Group 1 wage rates. ""Sewer cleaner"" means any worker who handles or comes in contact with raw sewage in small diameter sewers. Those who work inside recently active, large diameter sewers, and all recently active sewer manholes shal receive $5.00 per day above Group 1 wage rates.

GROUP 1-c: Burning and welding in connection with laborers' work; Synthetic thermoplastics and similar type welding

GROUP 1-d: Maintenance and repair track and road beds. All employees performing work covered herein shall receive $

.25 per hour above their regular rate for all work performed on underground structures not specifically covered herein. This paragraph shall not be construed to apply to work below ground level in open cut. It shall apply to cut and cover work of subway construction after the temporary cover has been placed.

GROUP 1-e: Work on and/or in bell hole footings and shafts thereof, and work on and in deep footings. (A deep footing is a hole 15 feet or more in depth.) In the event the depth of the footing is unknown at the commencement of excavation, and the final depth exceeds 15 feet, the deep footing wage rate would apply to all employees for each and every day worked on or in the excavation of the footing from the date of inception.

GROUP 1-f: Wire winding machine in connection with guniting or shot crete

GROUP 1-g, CONTRA COSTA COUNTY: Pipelayer (including grade checking in connection with pipelaying); Caulker; Bander; Pipewrapper; Conduit layer; Plastic pipe layer; Pressure pipe tester; No joint pipe and stripping of same, including repair of voids; Precast manhole setters, cast in place manhole form setters

GROUP 2: Asphalt shoveler; Cement dumper and handling dry cement or gypsum; Choke-setter and rigger (clearing work); Concrete bucket dumper and chute; Concrete chipping and grinding; Concrete laborer (wet or dry); Driller tender, chuck tender, nipper; Guinea chaser (stake), grout crew; High pressure nozzle, adductor; Hydraulic monitor (over 100 lbs. pressure); Loading and unloading, carrying and hauling of all rods and materials for use in reinforcing concrete construction; Pittsburgh chipper and similar type brush shredders; Sloper; Single foot, hand-held, pneumatic tamper; All pneumatic, air, gas and electric tools not listed in Groups 1 through 1-f; Jacking of pipe - under 12 inches

GROUP 3: Construction laborers, including bridge and general laborer; Dump, load spotter; Flag person; Fire watcher; Fence erector; Guardrail erector; Gardener, horticultural and landscape laborer; Jetting; Limber, brush loader and piler; Pavement marker (button setter); Maintenance, repair track and road beds; Streetcar and railroad construction track laborer; Temporary air and water lines, Victaulic or similar; Tool room attendant (jobsite only)

GROUP 4: Final clean-up work of debris, grounds and building

including but not limited to: street cleaner; cleaning and washing windows; brick cleaner (jobsite only); material cleaner (jobsite only). The classification ""material cleaner"" is to be utilized under the following conditions:
A: at demolition site for the salvage of the material.
B: at the conclusion of a job where the material is to be salvaged and stocked to be reused on another job.
C: for the cleaning of salvage material at the jobsite or temporary jobsite yard.

The material cleaner classification should not be used in the performance of ""form stripping, cleaning and oiling and moving to the next point of erection"".

GUNITE LABORER CLASSIFICATIONS

GROUP 1: Structural Nozzleman

GROUP 2: Nozzleman, Gunman, Potman, Groundman

GROUP 3: Reboundman

GROUP 4: Gunite laborer

WRECKING WORK LABORER CLASSIFICATIONS

GROUP 1: Skilled wrecker (removing and salvaging of sash, windows and materials)

GROUP 2: Semi-skilled wrecker (salvaging of other building materials)

GROUP 1-g, CONTRA COSTA COUNTY: Pipelayer (including grade checking in connection with pipelaying); Caulker; Bander; Pipewrapper; Conduit layer; Plastic pipe layer; Pressure pipe tester; No joint pipe and stripping of same, including repair of voids; Precast manhole setters, cast in place manhole form setters

---

LABO0324-014 07/01/2023

CONTRA COSTA COUNTY:

	Rates	Fringes

Brick Tender.....$ 37.05 27.45

FOOTNOTES: Work on jobs where heat-protective clothing is required: $2.00 per hour additional. Work at grinders: $.25 per hour additional. Manhole work: $2.00 per day additional.

LABO0324-018 07/01/2023

ALAMEDA AND CONTRA COSTA COUNTIES:

	Rates	Fringes
Plasterer tender	$ 41.93	30.32

Work on a swing stage scaffold: $1.00 per hour additional.

LABO1130-002 07/01/2023

MARIPOSA, MERCED, STANISLAUS, AND TUOLUMNE COUNTIES

	Rates	Fringes
LABORER (TRAFFIC CONTROL/LANE CLOSURE)		
Escort Driver, Flag Person	$ 36.26	27.30
Traffic Control Person I	$ 36.56	27.30
Traffic Control Person II	$ 34.06	27.30

TRAFFIC CONTROL PERSON I: Layout of traffic control, crash cushions, construction area and roadside signage.

TRAFFIC CONTROL PERSON II: Installation and removal of temporary/permanent signs, markers, delineators and crash cushions.

LABO1130-003 06/26/2023

MARIPOSA, MERCED, STANISLAUS, AND TUOLUMNE COUNTIES

	Rates	Fringes
Tunnel and Shaft Laborers:		
GROUP 1	$ 45.89	27.72
GROUP 2	$ 45.66	27.72
GROUP 3	$ 45.41	27.72
GROUP 4	$ 44.96	27.72
GROUP 5	$ 44.42	27.72

Shotcrete Specialist.....$ 46.41 27.72

TUNNEL AND SHAFT CLASSIFICATIONS

GROUP 1: Diamond driller; Groundmen; Gunite and shotcrete nozzlemen

GROUP 2: Rodmen; Shaft work & raise (below actual or excavated ground level)

GROUP 3: Bit grinder; Blaster, driller, powdermen, heading; Cherry pickermen - where car is lifted; Concrete finisher in tunnel; Concrete screedman; Grout pumpman and potman; Gunite & shotcrete gunman & potman; Headermen; High pressure nozzleman; Miner - tunnel, including top and bottom man on shaft and raise work; Nipper; Nozzleman on slick line; Sandblaster - potman, Robotic Shotcrete Placer, Segment Erector, Tunnel Muck Hauler, Steel Form raiser and setter; Timberman, retimberman (wood or steel or substitute materials therefore); Tugger (for tunnel laborer work); Cable tender; Chuck tender; Powderman - primer house

GROUP 4: Vibrator operator, pavement breaker; Bull gang - muckers, trackmen; Concrete crew - includes rodding and spreading, Dumpmen (any method)

GROUP 5: Grout crew; Reboundman; Swamper/ Brakeman

LABO1130-005 07/01/2023

MARIPOSA, MERCED, STANISLAUS AND TUOLUMNE COUNTIES

	Rates	Fringes
LABORER		
Mason Tender-Brick	$ 36.29	25.55

LABO1130-007 06/26/2023

MARIPOSA, MERCED, STANISLAUS, AND TUOLUMNE , COUNTIES

	Rates	Fringes
LABORER (CONSTRUCTION CRAFT LABORERS - AREA B:)		
Construction Specialist Group	$ 36.20	27.30
GROUP 1	$ 35.50	27.30
GROUP 1-a	$ 35.72	27.30

GROUP 1-c.....$ 35.55 27.30
GROUP 1-e.....$ 36.05 27.30
GROUP 1-f.....$ 36.08 27.30
GROUP 2.....$ 35.35 27.30
GROUP 3.....$ 35.25 27.30
GROUP 4.....$ 28.94 27.30

See groups 1-b and 1-d under laborer classifications.

LABORER (GARDENERS,
HORTICULTURAL & LANDSCAPE
LABORERS - AREA B:)
(1) New Construction.....$ 35.25 27.30
(2) Establishment Warranty
Period.....$ 28.94 27.30

LABORER (GUNITE - AREA B:)
GROUP 1.....$ 36.46 27.30
GROUP 2.....$ 35.96 27.30
GROUP 3.....$ 35.37 27.30
GROUP 4.....$ 35.25 27.30

LABORER (WRECKING - AREA B:)
GROUP 1.....$ 35.50 27.30
GROUP 2.....$ 35.35 27.30

FOOTNOTES:

Laborers working off or with or from bos'n chairs, swinging scaffolds, belts shall receive $0.25 per hour above the applicable wage rate. This shall not apply to workers entitled to receive the wage rate set forth in Group 1-a below.

LABORER CLASSIFICATIONS

CONSTRUCTION SPECIALIST GROUP: Asphalt ironer and raker; Chainsaw; Laser beam in connection with laborers' work; Cast-in- place manhole form setter; Pressure pipelayer; Davis trencher - 300 or similar type (and all small trenchers); Blaster; Diamond driller; Multiple unit drill; Hydraulic drill

GROUP 1: Asphalt spreader boxes (all types); Barko, Wacker and similar type tampers; Buggymobile; Caulker, bander, pipewrapper, conduit layer, plastic pipelayer; Certified hazardous waste worker including Leade Abatement; Compactors of all types; Concrete and magnesite mixer, 1/2 yd. and under; Concrete pan work; Concrete sander; Concrete saw; Cribber and/or shoring; Cut granite curb setter; Dri-pak-it machine; Faller, logloader and bucker; Form raiser, slip forms; Green cutter; Headerboard, Hubsetter,

aligner, by any method; High pressure blow pipe (1-1/2"" or over, 100 lbs. pressure/over); Hydro seeder and similar type; Jackhammer operator; Jacking of pipe over 12 inches; Jackson and similar type compactor; Kettle tender, pot and worker applying asphalt, lay-kold, creosote, lime, caustic and similar type materials (applying means applying, dipping or handling of such materials); Lagging, sheeting, whaling, bracing, trenchjacking, lagging hammer; Magnesite, epoxyresin, fiberglass, mastic worker (wet or dry); No joint pipe and stripping of same, including repair of voids; Pavement breaker and spader, including tool grinder; Perma curb; Pipelayer (including grade checking in connection with pipelaying); Precast-manhole setter; Pressure pipe tester; Post hole digger, air, gas and electric; Power broom sweeper; Power tampers of all types (except as shown in Group 2); Ram set gun and stud gun; Riprap stonepaver and rock-slinger, including placing of sacked concrete and/or sand (wet or dry) and gabions and similar type; Rotary scarifier or multiple head concrete chipping scarifier; Roto and Ditch Witch; Rototiller; Sandblaster, pot, gun, nozzle operators; Signalling and rigging; Tank cleaner; Tree climber; Turbo blaster; Vibrascreed, bull float in connection with laborers' work; Vibrator; Hazardous waste worker (lead removal); Asbestos and mold removal worker

GROUP 1-a: Joy drill model TWM-2A; Gardner-Denver model DH143 and similar type drills; Track driller; Jack leg driller; Wagon driller; Mechanical drillers, all types regardless of type or method of power; Mechanical pipe layers, all types regardless of type or method of power; Blaster and powder; All work of loading, placing and blasting of all powder and explosives of whatever type regardless of method used for such loading and placing; High scalers (including drilling of same); Tree topper; Bit grinder

GROUP 1-b: Sewer cleaners shall receive $4.00 per day above Group 1 wage rates. ""Sewer cleaner"" means any worker who handles or comes in contact with raw sewage in small diameter sewers. Those who work inside recently active, large diameter sewers, and all recently active sewer manholes shal receive $5.00 per day above Group 1 wage rates.

GROUP 1-c: Burning and welding in connection with laborers' work; Synthetic thermoplastics and similar type welding

GROUP 1-d: Maintenance and repair track and road beds. All employees performing work covered herein shall receive $ .25 per hour above their regular rate for all work

performed on underground structures not specifically covered herein. This paragraph shall not be construed to apply to work below ground level in open cut. It shall apply to cut and cover work of subway construction after the temporary cover has been placed.

GROUP 1-e: Work on and/or in bell hole footings and shafts thereof, and work on and in deep footings. (A deep footing is a hole 15 feet or more in depth.) In the event the depth of the footing is unknown at the commencement of excavation, and the final depth exceeds 15 feet, the deep footing wage rate would apply to all employees for each and every day worked on or in the excavation of the footing from the date of inception.

GROUP 1-f: Wire winding machine in connection with guniting or shot crete

GROUP 2: Asphalt shoveler; Cement dumper and handling dry cement or gypsum; Choke-setter and rigger (clearing work); Concrete bucket dumper and chute; Concrete chipping and grinding; Concrete laborer (wet or dry); Driller tender, chuck tender, nipper; Guinea chaser (stake), grout crew; High pressure nozzle, adductor; Hydraulic monitor (over 100 lbs. pressure); Loading and unloading, carrying and hauling of all rods and materials for use in reinforcing concrete construction; Pittsburgh chipper and similar type brush shredders; Sloper; Single foot, hand-held, pneumatic tamper; All pneumatic, air, gas and electric tools not listed in Groups 1 through 1-f; Jacking of pipe - under 12 inches

GROUP 3: Construction laborers, including bridge and general laborer; Dump, load spotter; Flag person; Fire watcher; Fence erector; Guardrail erector; Gardener, horticultural and landscape laborer; Jetting; Limber, brush loader and piler; Pavement marker (button setter); Maintenance, repair track and road beds; Streetcar and railroad construction track laborer; Temporary air and water lines, Victaulic or similar; Tool room attendant (jobsite only)

GROUP 4: Final clean-up work of debris, grounds and building including but not limited to: street cleaner; cleaning and washing windows; brick cleaner (jobsite only); material cleaner (jobsite only). The classification ""material cleaner"" is to be utilized under the following conditions:
A: at demolition site for the salvage of the material.
B: at the conclusion of a job where the material is to be salvaged and stocked to be reused on another job.
C: for the cleaning of salvage material at the jobsite or

temporary jobsite yard.

The material cleaner classification should not be used in the performance of ""form stripping, cleaning and oiling and moving to the next point of erection"".

GUNITE LABORER CLASSIFICATIONS

GROUP 1: Structural Nozzleman

GROUP 2: Nozzleman, Gunman, Potman, Groundman

GROUP 3: Reboundman

GROUP 4: Gunite laborer

WRECKING WORK LABORER CLASSIFICATIONS

GROUP 1: Skilled wrecker (removing and salvaging of sash, windows and materials)

GROUP 2: Semi-skilled wrecker (salvaging of other building materials)

LABO1130-008 07/01/2023

CALAVERAS, FRESNO, KINGS, MADERA, MARIPOSA, MERCED, SAN JOAQUIN, STANISLAUS & TUOLUMNE

	Rates	Fringes
Plasterer tender.....	$ 39.77	28.54

Work on a swing stage scaffold: $1.00 per hour additional.

LABO1130-009 07/01/2023

MARIPOSA, MERCED, STANISLAUS, AND TUOLUMNE COUNTIES

	Rates	Fringes
LABORER (Plaster Tender).....	$ 39.77	28.54

Work on a swing stage scaffold: $1.00 per hour additional.

PAIN0016-001 01/01/2024

ALAMEDA, CONTRA COSTA, MONTEREY, SAN BENITO, SAN MATEO, SANTA CLARA, AND SANTA CRUZ COUNTIES

	Rates	Fringes
Painters:.....	$ 50.51	27.66

PREMIUMS:

EXOTIC MATERIALS - $1.25 additional per hour.
SPRAY WORK: - $0.50 additional per hour.
INDUSTRIAL PAINTING - $0.25 additional per hour
[Work on industrial buildings used for the manufacture and processing of goods for sale or service; steel construction (bridges), stacks, towers, tanks, and similar structures]

HIGH WORK:
over 50 feet - $2.00 per hour additional
100 to 180 feet - $4.00 per hour additional
Over 180 feet - $6.00 per houir additional

PAIN0016-003 01/01/2024

AREA 1: ALAMEDA, CONTRA COSTA, SAN FRANCISCO, SAN MATEO & SANTA CLARA COUNTIES

AREA 2: CALAVERAS, MARIPOA, MERCED, MONTEREY, SAN BENITO, SAN JOAQUIN, SANTA CRUZ, STANISLAUS & TUOLUMNE COUNTIES

	Rates	Fringes
Drywall Finisher/Taper		
AREA 1.....	$ 60.41	31.34
AREA 2.....	$ 56.28	29.94

PAIN0016-012 01/01/2024

ALAMEDA, CONTRA COSTA, MARIPOSA, MERCED, MONTEREY, SAN BENITO, SAN FRANCISCO, SAN MATEO, SANTA CLARA AND SANTA CRUZ COUNTIES

	Rates	Fringes
SOFT FLOOR LAYER.....	$ 59.00	33.03

PAIN0016-015 01/01/2024

CALAVERAS, MARIPOSA, MERCED, SAN JOAQUIN, STANISLAUS & TUOLUMNE COUNTIES

	Rates	Fringes
PAINTER		
Brush	$ 40.85	22.40

FOOTNOTES:
SPRAY/SANDBLAST: $0.50 additional per hour.
EXOTIC MATERIALS: $1.25 additional per hour.
HIGH TIME: Over 50 ft above ground or water level $2.00 additional per hour. 100 to 180 ft above ground or water level $4.00 additional per hour. Over 180 ft above ground or water level $6.00 additional per hour.

PAIN0016-022 01/01/2024

SAN FRANCISCO COUNTY

	Rates	Fringes
PAINTER	$ 54.13	27.66

PAIN0169-001 01/01/2023

FRESNO, KINGS, MADERA, MARIPOSA AND MERCED COUNTIES:

	Rates	Fringes
GLAZIER	$ 44.33	28.88

PAIN0169-005 01/01/2024

ALAMEDA CONTRA COSTA, MONTEREY, SAN BENITO, SAN FRANCISCO, SAN MATEO, SANTA CLARA & SANTA CRUZ COUNTIES

	Rates	Fringes
GLAZIER	$ 56.22	34.00

PAIN0294-004 07/01/2023

FRESNO, KINGS AND MADERA COUNTIES

	Rates	Fringes
PAINTER		
Brush, Roller	$ 34.49	21.80
Drywall Finisher/Taper	$ 35.74	21.80

FOOTNOTE:
Spray Painters & Paperhangers recive $1.00 additional per hour. Painters doing Drywall Patching receive $1.25 additional per hour. Lead Abaters & Sandblasters receive $1.50 additional per hour. High Time - over 30 feet (does not include work from a lift) $0.75 per hour additional.

PAIN0294-005 01/01/2023

FRESNO, KINGS & MADERA

	Rates	Fringes
SOFT FLOOR LAYER	$ 38.53	23.19

PAIN0767-001 01/01/2024

CALAVERAS, SAN JOAQUIN, STANISLAUS AND TUOLUMNE COUNTIES:

	Rates	Fringes
GLAZIER	$ 43.25	35.62

PAID HOLIDAYS: New Year's Day, Martin Luther King, Jr. Day, President's Day, Memorial Day, Independence Day, Labor Day, Veteran's Day, Thanksgiving Day, and Christmas Day.

Employee required to wear a body harness shall receive $1.50 per hour above the basic hourly rate at any elevation.

PAIN1176-001 07/01/2022

HIGHWAY IMPR0VEMENT

	Rates	Fringes
Parking Lot Striping/Highway Marking:		
GROUP 1	$ 40.83	17.62
GROUP 2	$ 34.71	17.62
GROUP 3	$ 35.11	17.62

CLASSIFICATIONS

GROUP 1: Striper: Layout and application of painted traffic stripes and marking; hot thermo plastic; tape, traffic stripes and markings

GROUP 2: Gamecourt & Playground Installer

GROUP 3: Protective Coating, Pavement Sealing

PAIN1237-003 01/01/2024

CALAVERAS; SAN JOAQUIN COUNTIES; STANISLAUS AND TUOLUMNE COUNTIES:

	Rates	Fringes
SOFT FLOOR LAYER	$ 48.54	26.59

PLAS0066-002 07/01/2019

ALAMEDA, CONTRA COSTA, SAN MATEO AND SAN FRANCISCO COUNTIES:

	Rates	Fringes
PLASTERER	$ 42.41	30.73

PLAS0300-001 07/01/2018

	Rates	Fringes
PLASTERER		
AREA 188: Fresno	$ 32.70	31.68
AREA 224: San Benito, Santa Clara, Santa Cruz	$ 32.88	31.68
AREA 295: Calaveras & San Joaquin Couonties	$ 32.70	31.68
AREA 337: Monterey County	$ 32.88	31.68
AREA 429: Mariposa, Merced, Stanislaus, Tuolumne Counties	$ 32.70	31.68

PLAS0300-005 07/01/2016

	Rates	Fringes
CEMENT MASON/CONCRETE FINISHER	$ 32.15	23.27

PLUM0038-001 07/01/2023

SAN FRANCISCO COUNTY

	Rates	Fringes
PLUMBER (Plumber, Steamfitter, Refrigeration Fitter)	$ 85.50	48.98

PLUM0038-005 07/01/2023

SAN FRANCISCO COUNTY

	Rates	Fringes
Landscape/Irrigation Fitter (Underground/Utility Fitter)	$ 72.68	32.91

PLUM0062-001 07/01/2024

MONTEREY AND SANTA CRUZ COUNTIES

	Rates	Fringes
PLUMBER & STEAMFITTER	$ 53.00	41.70

PLUM0159-001 07/01/2024

CONTRA COSTA COUNTY

	Rates	Fringes
Plumber and steamfitter		
(1) Refrigeration	$ 65.28	48.04
(2) All other work	$ 66.17	48.04

PLUM0246-001 07/01/2024

FRESNO, KINGS & MADERA COUNTIES

	Rates	Fringes
PLUMBER & STEAMFITTER	$ 50.00	40.69

---

* PLUM0246-004 01/01/2017

FRESNO, MERCED & SAN JOAQUIN COUNIES

	Rates	Fringes
PLUMBER (PIPE TRADESMAN).....	$ 13.00 **	10.74

PIPE TRADESMAN SCOPE OF WORK:
Installation of corrugated metal piping for drainage, as well as installation of corrugated metal piping for culverts in connection with storm sewers and drains; Grouting, dry packing and diapering of joints, holes or chases including paving over joints, in piping; Temporary piping for dirt work for building site preparation; Operating jack hammers, pavement breakers, chipping guns, concrete saws and spades to cut holes, chases and channels for piping systems; Digging, grading, backfilling and ground preparation for all types of pipe to all points of the jobsite; Ground preparation including ground leveling, layout and planting of shrubbery, trees and ground cover, including watering, mowing, edging, pruning and fertilizing, the breaking of concrete, digging, backfilling and tamping for the preparation and completion of all work in connection with lawn sprinkler and landscaping; Loading, unloading and distributing materials at jobsite; Putting away materials in storage bins in jobsite secure storage area; Demolition of piping and fixtures for remodeling and additions; Setting up and tearing down work benches, ladders and job shacks; Clean-up and sweeping of jobsite; Pipe wrapping and waterproofing where tar or similar material is applied for protection of buried piping; Flagman

---

PLUM0342-001 07/01/2023

ALAMEDA & CONTRA COSTA COUNTIES

	Rates	Fringes
PIPEFITTER		
CONTRA COSTA COUNTY.....	$ 74.00	47.45
PLUMBER, PIPEFITTER, STEAMFITTER		
ALAMEDA COUNTY.....	$ 74.00	47.45

PLUM0355-004 07/01/2024

ALAMEDA, CALAVERAS, CONTRA COSTA, FRESNO, KINGS, MADERA, MARIPOSA, MERCED, MONTEREY, SAN BENITO, SAN JOAQUIN, SAN MATEO, SANTA CLARA, SANTA CRUZ, STANISLAUS, AND TUOLUMNE COUNTIES:

	Rates	Fringes

Underground Utility Worker
/Landscape Fitter.....$ 34.51 18.30

PLUM0393-001 07/01/2021

SAN BENITO AND SANTA CLARA COUNTIES

	Rates	Fringes
PLUMBER/PIPEFITTER.....	$ 68.76	46.63

PLUM0442-001 07/01/2024

CALAVERAS, MARIPOSA, MERCED, SAN JOAQUIN, STANISLAUS & TUOLUMNE COUNTIES

	Rates	Fringes
PLUMBER & STEAMFITTER.....	$ 54.05	36.99

PLUM0467-001 07/01/2024

SAN MATEO COUNTY

	Rates	Fringes
Plumber/Pipefitter/Steamfitter...	$ 83.75	40.65

ROOF0027-002 01/01/2024

FRESNO, KINGS, AND MADERA COUNTIES

	Rates	Fringes
ROOFER.....	$ 42.51	16.11

FOOTNOTE: Work with pitch, pitch base of pitch impregnated products or any material containing coal tar pitch, on any building old or new, where both asphalt and pitchers are used in the application of a built-up roof or tear off: $2.00 per hour additional.

ROOF0040-002 08/01/2024

SAN FRANCISCO & SAN MATEO COUNTIES:

	Rates	Fringes

ROOFER.....$ 55.30 22.97

ROOF0081-001 08/01/2023

ALAMEDA AND CONTRA COSTA COUNTIES:

	Rates	Fringes
Roofer	$ 52.47	22.31

ROOF0081-004 08/01/2024

CALAVERAS, MARIPOSA, MERCED, SAN JOAQUIN, STANISLAUS AND TUOLUMNE COUNTIES:

	Rates	Fringes
ROOFER	$ 49.65	22.19

ROOF0095-002 08/01/2023

MONTEREY, SAN BENITO, SANTA CLARA, AND SANTA CRUZ COUNTIES:

	Rates	Fringes
ROOFER		
Bitumastic, Enameler, Coal Tar, Pitch and Mastic worker	$ 57.17	21.51
Journeyman	$ 53.17	21.51
Kettle person (2 kettles)	$ 55.17	21.51

SFCA0483-001 08/01/2024

ALAMEDA, CONTRA COSTA, SAN FRANCISCO, SAN MATEO AND SANTA CLARA COUNTIES:

	Rates	Fringes
SPRINKLER FITTER (FIRE)	$ 79.13	38.51

SFCA0669-011 01/01/2024

CALAVERAS, FRESNO, KINGS, MADERA, MARIPOSA, MERCED, MONTEREY, SAN BENITO, SAN JOAQUIN, SANTA CRUZ, STANISLAUS AND TUOLUMNE COUNTIES:

	Rates	Fringes
SPRINKLER FITTER	$ 44.32	27.83

SHEE0104-001 07/01/2020

AREA 1: ALAMEDA, CONTRA COSTA, SAN FRANCISCO, SAN MATEO, SANTA CLARA

AREA 2: MONTEREY & SAN BENITO

AREA 3: SANTA CRUZ

	Rates	Fringes
SHEET METAL WORKER		
AREA 1:		
Mechanical Contracts under $200,000	$ 55.92	45.29
All Other Work	$ 64.06	46.83
AREA 2	$ 52.90	36.44
AREA 3	$ 55.16	34.18

SHEE0104-003 07/01/2021

CALAVERAS AND SAN JOAQUIN COUNTIES:

	Rates	Fringes
SHEET METAL WORKER	$ 44.34	39.22

SHEE0104-005 07/01/2021

MARIPOSA, MERCED, STANISLAUS AND TUOLUMNE COUNTIES:

	Rates	Fringes
SHEET METAL WORKER (Excluding metal deck and siding)	$ 41.28	45.41

SHEE0104-007 07/01/2021

FRESNO, KINGS, AND MADERA COUNTIES:

	Rates	Fringes
SHEET METAL WORKER	$ 44.07	40.79

SHEE0104-015 07/01/2020

ALAMEDA, CONTRA COSTA, MONTEREY, SAN BENITO, SAN FRANCISCO, SAN MATEO, SANTA CLARA AND SANTA CRUZ COUNTIES:

	Rates	Fringes
SHEET METAL WORKER (Metal Decking and Siding only)	$ 44.45	35.55

SHEE0104-018 07/01/2020

CALAVERAS, FRESNO, KINGS, MADERA, MARIPOSA, MERCED, SAN JOAQUIN, STANISLAUS AND TUOLUMNE COUNTIES:

	Rates	Fringes
Sheet metal worker (Metal decking and siding only)	$ 44.45	35.55

TEAM0094-001 07/01/2024

	Rates	Fringes
Truck drivers:		
GROUP 1	$ 41.54	33.25
GROUP 2	$ 41.84	33.25
GROUP 3	$ 42.14	33.25
GROUP 4	$ 42.49	33.25
GROUP 5	$ 42.84	33.25

FOOTNOTES:

Articulated dump truck; Bulk cement spreader (with or without auger); Dumpcrete truck; Skid truck (debris box); Dry pre-batch concrete mix trucks; Dumpster or similar type; Slurry truck: Use dump truck yardage rate.
Heater planer; Asphalt burner; Scarifier burner; Industrial lift truck (mechanical tailgate); Utility and clean-up truck: Use appropriate rate for the power unit or the equipment utilized.

TRUCK DRIVER CLASSIFICATIONS

GROUP 1: Dump trucks, under 6 yds.; Single unit flat rack (2-axle unit); Nipper truck (when flat rack truck is used appropriate flat rack shall apply); Concrete pump truck (when flat rack truck is used appropriate flat rack shall

apply); Concrete pump machine; Fork lift and lift jitneys; Fuel and/or grease truck driver or fuel person; Snow buggy; Steam cleaning; Bus or personhaul driver; Escort or pilot car driver; Pickup truck; Teamster oiler/greaser and/or serviceperson; Hook tender (including loading and unloading); Team driver; Tool room attendant (refineries)

GROUP 2: Dump trucks, 6 yds. and under 8 yds.; Transit mixers, through 10 yds.; Water trucks, under 7,000 gals.; Jetting trucks, under 7,000 gals.; Single-unit flat rack (3-axle unit); Highbed heavy duty transport; Scissor truck; Rubber-tired muck car (not self-loaded); Rubber-tired truck jumbo; Winch truck and ""A"" frame drivers; Combination winch truck with hoist; Road oil truck or bootperson; Buggymobile; Ross, Hyster and similar straddle carriers; Small rubber-tired tractor

GROUP 3: Dump trucks, 8 yds. and including 24 yds.; Transit mixers, over 10 yds.; Water trucks, 7,000 gals. and over; Jetting trucks, 7,000 gals. and over; Vacuum trucks under 7500 gals. Trucks towing tilt bed or flat bed pull trailers; Lowbed heavy duty transport; Heavy duty transport tiller person; Self- propelled street sweeper with self-contained refuse bin; Boom truck - hydro-lift or Swedish type extension or retracting crane; P.B. or similar type self-loading truck; Tire repairperson; Combination bootperson and road oiler; Dry distribution truck (A bootperson when employed on such equipment, shall receive the rate specified for the classification of road oil trucks or bootperson); Ammonia nitrate distributor, driver and mixer; Snow Go and/or plow

GROUP 4: Dump trucks, over 25 yds. and under 65 yds.; Water pulls - DW 10's, 20's, 21's and other similar equipment when pulling Aqua/pak or water tank trailers; Helicopter pilots (when transporting men and materials); Lowbedk Heavy Duty Transport up to including 7 axles; DW10's, 20's, 21's and other similar Cat type, Terra Cobra, LeTourneau Pulls, Tournorocker, Euclid and similar type equipment when pulling fuel and/or grease tank trailers or other miscellaneous trailers; Vacuum Trucks 7500 gals and over and truck repairman

GROUP 5: Dump trucks, 65 yds. and over; Holland hauler; Low bed Heavy Duty Transport over 7 axles

---

WELDERS - Receive rate prescribed for craft performing operation to which welding is incidental.

==========

** Workers in this classification may be entitled to a higher minimum wage under Executive Order 14026 ($17.20) or 13658 ($12.90). Please see the Note at the top of the wage determination for more information. Please also note that the minimum wage requirements of Executive Order 14026 are not currently being enforced as to any contract or subcontract to which the states of Texas, Louisiana, or Mississippi, including their agencies, are a party.

Note: Executive Order (EO) 13706, Establishing Paid Sick Leave for Federal Contractors applies to all contracts subject to the Davis-Bacon Act for which the contract is awarded (and any solicitation was issued) on or after January 1, 2017. If this contract is covered by the EO, the contractor must provide employees with 1 hour of paid sick leave for every 30 hours they work, up to 56 hours of paid sick leave each year. Employees must be permitted to use paid sick leave for their own illness, injury or other health-related needs, including preventive care; to assist a family member (or person who is like family to the employee) who is ill, injured, or has other health-related needs, including preventive care; or for reasons resulting from, or to assist a family member (or person who is like family to the employee) who is a victim of, domestic violence, sexual assault, or stalking. Additional information on contractor requirements and worker protections under the EO is available at
https://www.dol.gov/agencies/whd/government-contracts.

Unlisted classifications needed for work not included within the scope of the classifications listed may be added after award only as provided in the labor standards contract clauses (29CFR 5.5 (a) (1) (iii)).

The body of each wage determination lists the classification and wage rates that have been found to be prevailing for the cited type(s) of construction in the area covered by the wage determination. The classifications are listed in alphabetical order of ""identifiers"" that indicate whether the particular rate is a union rate (current union negotiated rate for local), a survey rate (weighted average rate) or a union average rate (weighted union average rate).

Union Rate Identifiers

A four letter classification abbreviation identifier enclosed in dotted lines beginning with characters other than ""SU"" or ""UAVG"" denotes that the union classification and rate were prevailing for that classification in the survey. Example: PLUM0198-005 07/01/2014. PLUM is an abbreviation identifier of the union which prevailed in the survey for this classification, which in this example would be Plumbers. 0198 indicates the local union number or district council number where applicable, i.e., Plumbers Local 0198. The next number, 005 in the example, is an internal number used in processing the wage determination. 07/01/2014 is the effective date of the most current negotiated rate, which in this example is July 1, 2014.

Union prevailing wage rates are updated to reflect all rate changes in the collective bargaining agreement (CBA) governing this classification and rate.

Survey Rate Identifiers

Classifications listed under the ""SU"" identifier indicate that no one rate prevailed for this classification in the survey and the published rate is derived by computing a weighted average rate based on all the rates reported in the survey for that classification. As this weighted average rate includes all rates reported in the survey, it may include both union and non-union rates. Example: SULA2012-007 5/13/2014. SU indicates the rates are survey rates based on a weighted average calculation of rates and are not majority rates. LA indicates the State of Louisiana. 2012 is the year of survey on which these classifications and rates are based. The next number, 007 in the example, is an internal number used in producing the wage determination. 5/13/2014 indicates the survey completion date for the classifications and rates under that identifier.

Survey wage rates are not updated and remain in effect until a new survey is conducted.

Union Average Rate Identifiers

Classification(s) listed under the UAVG identifier indicate that no single majority rate prevailed for those classifications; however, 100% of the data reported for the classifications was union data. EXAMPLE: UAVG-OH-0010 08/29/2014. UAVG indicates that the rate is a weighted union average rate. OH indicates the state. The next number, 0010 in the example, is an internal number used in producing the wage determination. 08/29/2014 indicates the survey completion date for the classifications and rates under that identifier.

A UAVG rate will be updated once a year, usually in January of each year, to reflect a weighted average of the current negotiated/CBA rate of the union locals from which the rate is based.

State Adopted Rate Identifiers

Classifications listed under the ""SA"" identifier indicate that the prevailing wage rate set by a state (or local) government was adopted under 29 C.F.R §1.3(g)-(h). Example: SAME2023-007 01/03/2024. SA reflects that the rates are state adopted. ME refers to the State of Maine. 2023 is the year during which the state completed the survey on which the listed classifications and rates are based. The next number, 007 in the example, is an internal number used in producing the wage determination. 01/03/2024 reflects the date on which the classifications and rates under the ?SA? identifier took effect under state law in the state from which the rates were adopted.

WAGE DETERMINATION APPEALS PROCESS

1.) Has there been an initial decision in the matter? This can be:

* an existing published wage determination
* a survey underlying a wage determination
* a Wage and Hour Division letter setting forth a position on a wage determination matter
* a conformance (additional classification and rate) ruling

On survey related matters, initial contact, including requests for summaries of surveys, should be with the Wage and Hour National Office because National Office has responsibility for the Davis-Bacon survey program. If the response from this initial contact is not satisfactory, then the process described in 2.) and 3.) should be followed.

With regard to any other matter not yet ripe for the formal process described here, initial contact should be with the Branch of Construction Wage Determinations. Write to:

Branch of Construction Wage Determinations
Wage and Hour Division
U.S. Department of Labor
200 Constitution Avenue, N.W.
Washington, DC 20210

2.) If the answer to the question in 1.) is yes, then an interested party (those affected by the action) can request review and reconsideration from the Wage and Hour Administrator (See 29 CFR Part 1.8 and 29 CFR Part 7). Write to:

Wage and Hour Administrator
U.S. Department of Labor
200 Constitution Avenue, N.W.
Washington, DC 20210

The request should be accompanied by a full statement of the interested party's position and by any information (wage payment data, project description, area practice material, etc.) that the requestor considers relevant to the issue.

3.) If the decision of the Administrator is not favorable, an interested party may appeal directly to the Administrative Review Board (formerly the Wage Appeals Board). Write to:

Administrative Review Board
U.S. Department of Labor
200 Constitution Avenue, N.W.
Washington, DC 20210

4.) All decisions by the Administrative Review Board are final.

==========

END OF GENERAL DECISION"