Exhibit F

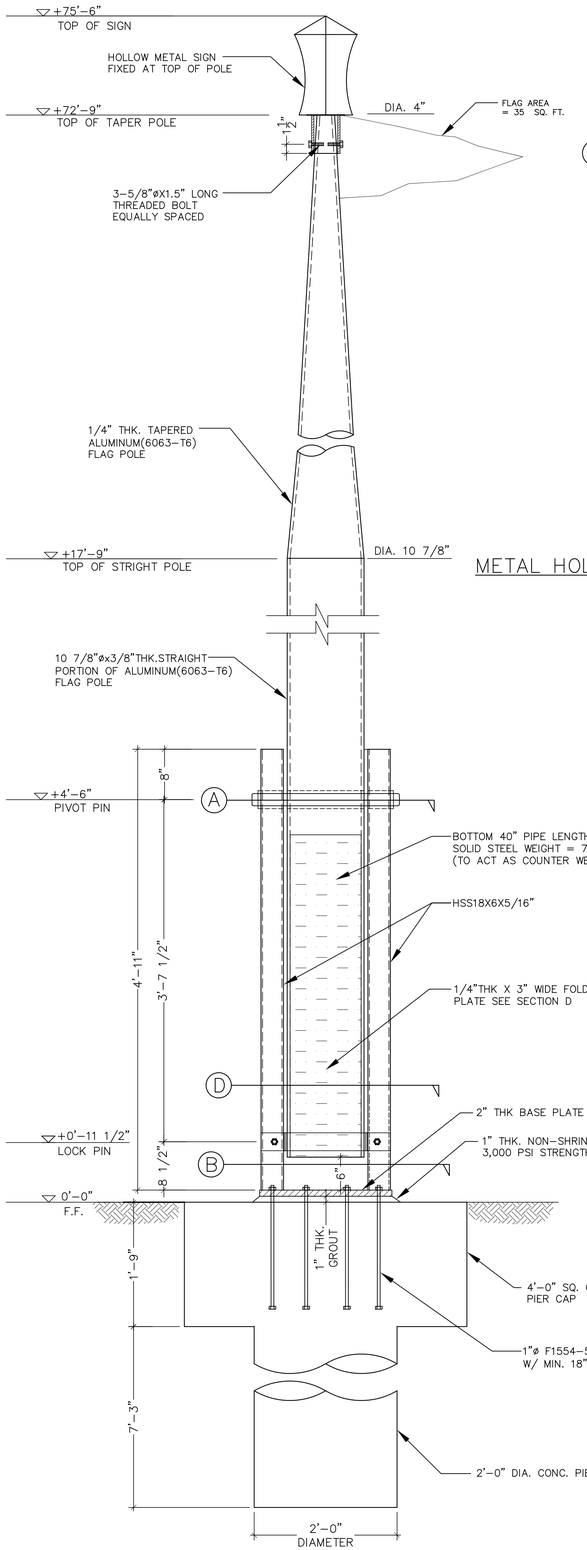

1 POLE SECTION/PLAN

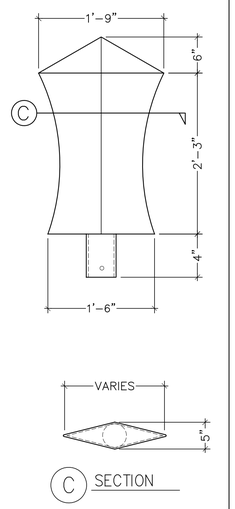

C SECTION

METAL HOLLOW SIGN(KHANDA)

APPL. NO. P24-01598 EXHIBIT A-2 DATE 07/23/2024
PLANNING REVIEW BY _____ DATE _____
TRAFFIC ENG. _____ DATE _____
APPROVED BY _____ DATE _____
CITY OF FRESNO DARM DEPT

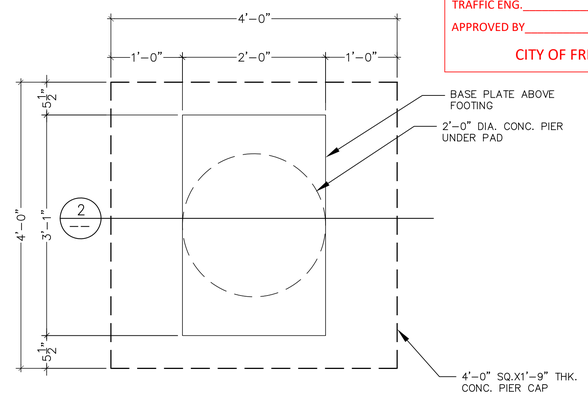

A FOUNDATION PLAN

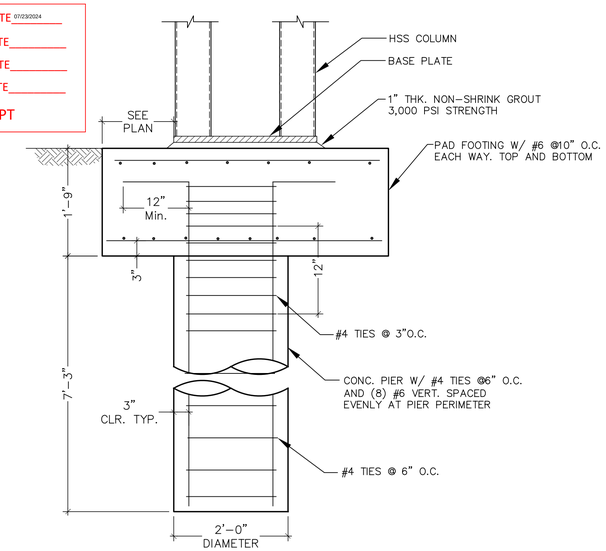

2 SECTION

2 CONCRETE PIER REINFORCEMENT/FOUNDATION PLAN

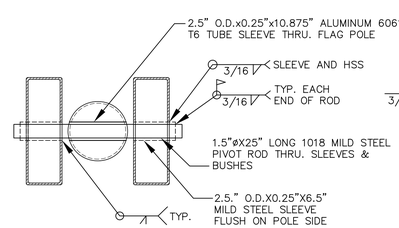

A SECTION

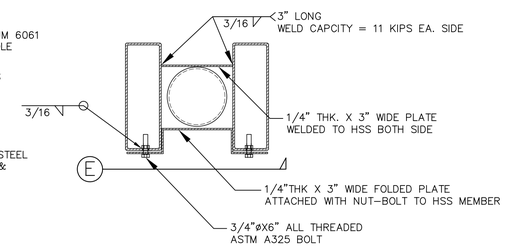

D SECTION

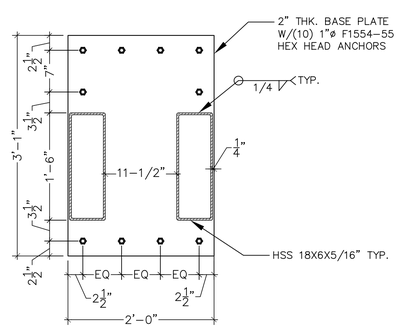

B PLAN

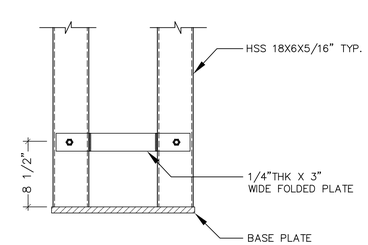

E ELEVATION

3 DETAILS/SECTIONS

A. GENERAL

1. THE CONTRACTOR SHALL VERIFY ALL CONDITIONS AND DIMENSIONS AT THE THE SITE
2. OBSERVATION VISITS TO THE SITE BY THE DESIGN ENGINEER SHALL NEITHER BE CONSTRUED AS INSPECTION OR APPROVAL OF CONSTRUCTION
3. DURING AND AFTER CONSTRUCTION, BUILDING AND/OR OWNER SHALL KEEP LOADS ON THE STRUCTURE WITHIN LIMITS OF DESIGN LOADS
4. TYPICAL DETAILS AND SECTION SHALL APPLY WHERE SPECIFIC DETAILS ARE NOT SHOWN.
5. DO NOT BEGIN INSTALLATION OF FLAGPOLE UNTIL FINAL GRADES AND ELEVATIONS HAVE BEEN ESTABLISHED.

B. FOUNDATION

1. ALLOWABLE SOIL BEARING PRESSURE 2500 PSF
2. DESIGN LATERAL SOIL PRESSURE 150 PSF/FIT OF DEPTH
3. ALL FOOTING SHALL BE PLACED ON AND AGAINST UNDISTURBED SOIL OF GRANULAR FILL MECHANICALLY COMPACTED TO NOT LESS THAN 95% OF MODIFIED PROCTOR DENSITY (ASTM D-1557)

C. CONCRETE AND REINFORCEMENT

1. ALL CONCRETE SHALL HAVE A DESIGN 28-DAYS COMPRESSIVE STRENGTH OF 3,000 PSI. REBAR ASTM A615 C-1107
2. NON-SHRINK GROUT SHALL CONFORM TO ASTM C-1107.

D. STRUCTURAL STEEL SPECIFICATION

1. ALUMINUM FLAGPOLE SHALL CONFORM TO ASTM B 221, ALLOY 6063-T6
2. ALL WEILDING SHALL BE PERFORMED BY CERTIFIED WELDERS IN ACCORDANCE WITH THE AMERICAN WELDING SOCIETY USING E-70XX ELECTRODES
3. ALL ANCHOR BOLT SHALL CONFORM TO ASTM F1554 GRADE 55 U.N.O.
4. PLATES SHALL CONFORM TO ASTM A36
5. RECTANGULAR HSS CONFORM TO ASTM A500 GRADE B

E. PAINTING

1. ALL EXPOSED STRUCTURAL STEEL SHALL BE PRIMED WITH ALSPAR 13-12-79 COATING OR APPROVED EQUAL.
2. ALL WELDS AND OTHER EXPOSED AREAS SHALL BE PRIMED WITH PRIME COAT AFTER FABRICATION

4 STRUCTURAL NOTES/SPECIFICATIONS

REVISIONS:

	REVISION ISSUE	DATED
1		
2		
3		
4		

ACE Design LLC
6283 Dean Martin Drive, Suite B
LAS VEGAS, NEVADA 89118
Phone: (702) 396-5114, Fax: (702)446-8155
Land Planning • Civil Engineering • Architectural Design • Structural Engineering

TITLE: FLAG POLE INSTALLATION (PLAN & DETAIL)

PROJECT: GURUDWARA NANAKSAR 3060 S. CHERRY AVE. FRESNO, CA 93706

REGISTERED PROFESSIONAL ENGINEER JAMES SIMONIAN C 71243 EXP 06/30/2025 CIVIL STATE OF CALIFORNIA

DATE: 12/07/2023
JOB : 17-41
DWG. BY: BS
CHK. BY: JS

NS-1

SHEET 1 OF 2