City of FRESNO

Planning and Development Department

2600 Fresno Street, Third Floor
Fresno, CA 93721
(559) 621-8277

Jennifer K. Clark, AICP, Director

Please reply to:
Steven Lieng
559-621-8007
Steven.Lieng@fresno.gov

July 1, 2022

Stephanie Say
Paul Halajian Architects
stephanies@halajianarch.com
(Sent via email only)

SUBJECT: DEVELOPMENT PERMIT APPLICATION NO. P21-05568 FOR PROPERTY LOCATED AT 6545 NORTH PALM AVENUE (APN: 407-762-12)

Dear Stephanie Say:

The Planning and Development Director, on July 1, 2022, approved Development Permit Application No. P21-05568. Development Permit No. P21-05568 was filed by Stephanie Say of Paul Halajian Architects and pertains to the 0.74 acres located at 6545 North Palm Avenue. The applicant proposes a three-phase project. Phase one consists of the rehabilitation of the existing historic Craycroft Home into a restaurant without alcohol sales with a proposed ±500 square-foot outdoor patio. Phase two proposes the construction of the private courtyard, public yard and proposed parking stalls, 10 for commercial tenants and 12 for residential tenants with a total of 22 parking stalls. Phase three will consist of the construction of six multi-family residential units behind the existing Craycroft Home. The parcel is zoned O/UGM/cz (Office/Urban Growth Management/conditions of zoning)

Development Permit Application No. P21-05568 was determined to be exempt from the California Environmental Quality Act by the Planning and Development Department on July 1, 2022, through a Class 31 Categorical Exemption. The approval of this project is subject to compliance with the following Conditions of Approval:

1) Development shall take place in accordance with Exhibits A-1 through A-5, E-1, E-2, F-1 through F-9, L and O-1 through O-4 dated March 23, 2022, and the Conditions of Approval dated July 1, 2022.

2) Miscellaneous Requirements

   a) Approval of this special permit shall be considered null and void in the event of failure by the applicant and/or the authorized representative, architect, engineer, or designer to disclose and delineate all facts and information relating to the subject property and the proposed development including, but not limited to, the following:

      i. All existing and proposed improvements including but not limited to buildings and structures, signs and their uses, trees, walls, driveways, outdoor storage, and open land

use areas on the subject property and all of the preceding which are located on adjoining property and may encroach on the subject property;

ii. All public and private easements, rights-of-way and any actual or potential prescriptive easements or uses of the subject property; and,

iii. Existing and proposed grade differentials between the subject property and adjoining property zoned or planned for residential use.

b) Approval of this special permit may become null and void in the event that development is not completed in accordance with all the conditions and requirements imposed on this special permit, the Zoning Ordinance, and all Public Works Standards and Specifications.

c) The Planning and Development Department shall not assume responsibility for any deletions or omissions resulting from the special permit review process or for additions or alterations to construction plans not specifically submitted and reviewed and approved pursuant to this special permit or subsequent amendments or revisions (**include this note on site plan**).

APPEALS

Please be advised that this project may be subject to a variety of discretionary conditions of approval. These conditions based on adopted City plans, ordinances and policies; those determined to be required through the interdepartmental/interagency review process; and those determined through the environmental assessment process as necessary to mitigate adverse effects on the health, safety and welfare of the community. The conditions of approval may also include requirements for development and use that would, on the whole, enhance the project and its relationship to the neighborhood and environment.

All conditions of approval based on adopted plans, codes, and regulations are mandatory. Conditions based on the FMC may only be modified by variance, provided the findings required by FMC Section 15-5506 can be made. Discretionary conditions of approval may be appealed but will ultimately be deemed mandatory unless appealed in writing to the Director within 15 days or by **July 18, 2022**. In the event you wish to appeal the Director's decision, you may do so by filing a written appeal with the Director. The appeal shall include the appellant's interest in or relationship to the subject property, the decision or action appealed and specific reasons why the applicant believes the decision or action appealed should not be upheld.

If you wish to appeal the decision, a written request must be received at the Planning and Development Department by **July 18, 2022**. The written request should be addressed to the Planning and Development Director and the project planner identified below and include the application number referenced above. Please submit the request in writing (mail or email to PublicCommentsPlanning@fresno.gov and CC the planner listed below) to the Planner by the date noted above. An $873.65 fee applies to an appeal by an applicant (no fee applies if member of the public). **The fee is required prior to accepting the appeal, as required by Section 15-5017-A.1 of the FMC and established by the Master Fee Schedule.**

COMPLIANCE REVIEW PROCESS

To complete the compliance review process for building permits relative to planning and zoning issues, please upload electronic PDF copies of the corrected, final site plan,

elevations, landscape, and irrigation plans, operational statement, any fees and title reports for required covenants, and any required studies or analyses into the compliance record for final review and approval into the compliance record at least 15 days before applying for building permits.

The compliance record number for this application is P22-02548. These documents can be uploaded electronically to the citizen access portal at www.fresno.gov/faaster. Contact Planner once any corrected exhibits are uploaded.

It may be necessary to resubmit these "corrected exhibits" a second time if not all the conditions have been complied with or are not shown on the exhibits. To complete the back-check process, the applicant must demonstrate compliance with all required conditions of approval prior to commencement of land use activity. Submit any required items to Steven Lieng in Planning and Development Department for Final review and Approval, prior to commencement of land use activity.

Copies of the final approved exhibits stamped by the Planning and Development must be submitted for unstamped copies of the same in each of the sets of construction plans submitted for plan check prior to the issuance of building permits.

EXPIRATION DATES

The exercise of rights granted by this special permit must be commenced by **July 1, 2025** (three years from the date of approval), pursuant to FMC Section 15-5013. An extension of up to one additional year may be granted, provided that the findings required under FMC Section 15-5013-A.1 are made by the Director. All required improvements must be installed prior to the operation of the proposed use.

Our goal is to continuously improve our customer service. Please take a moment to complete a quick survey linked here. If you have any questions regarding this letter, feel free to give me a call at the number listed above.

Sincerely,

Steven Lieng

Steven Lieng, Planner
Planning and Development

Enclosures: Conditions of Approval dated July 1, 2022
Exhibits A-1 through A-5, E-1, E-2, F-1 through F-9,
L and O-1 through O-4 dated March 23, 2022
Comments from partnered Agencies and Departments

City of Fresno
Planning and Development Department

Conditions of Approval
July 1, 2022

Development Permit Application No. P21-05568

Planner: Steven Lieng (559) 621-8007

PROJECT DESCRIPTION

Development Permit Application No. P21-05568, was filed by Stephanie Say of Paul Halajian Architects and pertains to the 0.74 acres located at 6545 North Palm Avenue. The applicant proposes a three-phase project. Phase one consists of the rehabilitation of the existing historic Craycroft Home into a restaurant without alcohol sales with a proposed ±500 square-foot outdoor patio. Phase two proposes the construction of the private courtyard, public yard and proposed parking stalls, 10 for commercial tenants and 12 for residential tenants with a total of 22 parking stalls. Phase three will consist of the construction of six multi-family residential units behind the existing Craycroft Home.

APNs: 407-762-12
ADDRESS: 6545 North Palm Avenue
ZONING: O *(Office/Urban Growth Management/condition of zoning)*

PART A - ITEMS TO BE COMPLETED

The following items are required prior to final approval and/or commencement of land use activity:

Planner to check when completed	
☐	Development shall take place in accordance with Exhibits A-1 through A-5, E-1, E-2, F-1 through F-9, L and O-1 through O-4 dated July 1, 2022. Transfer all comments and conditions on Exhibits to the corrected exhibit(s) and **upload to the related Compliance Record P22-02548 prior to issuance of Development Permit (see directions on approval letter)**.
☐	The address(es) within the enclosed address plan have been tentatively assigned to your project. These addresses will be formally entered into the official addressing system just prior to your submittal of building plans. Please inform the staff planner when you are ready to submit building plans for your project and include confirmation that the tentative addresses are consistent with your building plans. If your project changes and requires an updated address plan, please contact the staff planner.
☐	Provide Legal Description per Lot Line Adjustment No. 2022-03 on Exhibit A.
☐	Provide bicycle parking pursuant to Fresno Municipal Code (FMC) Section 15-2429 and the California Green Building Code.
☐	Comply with Section 15-2016 – Trash and Refuse Collection Areas of the FMC on Exhibit A.
☐	Correct all property line dimensions to reflect Lot Line Adjustment No. 2022-03 on Exhibit A.
☐	Depict and dimension outdoor patio area. Comply with Section 15-2744 of the FMC.
☐	Two (2) electric vehicle charging station (EVCS) are required per the California Green Building Standards Code Section 5.106.5.3.3. One (1) electric vehicle charging station (EVCS) The proposed number of EVCS's shall also comply with parking regulations and ADA compliance. Depict ADA EVCS Van accessibility parking stall. Revise Exhibit A to reflect provided number of

	parking stalls.
☐	Comply with Section 15-2409 of the FMC, one parking space per studio unit, one covered space shall be designated for each unit. One additional uncovered guest parking space must be provided for every four units. One parking space per one- or two-bedroom unit, one covered space shall be designated for each unit. One additional uncovered parking guest parking space must be provided for every two units. One parking space per 600 square feet are required for Restaurants. The parking area or space requirements imposed by the provisions of the Citywide Development Code, do not apply upon a Change of Occupancy or a change of use for any building or structure with was either constructed prior to February 13, 1954, or is older than 30 years old for the proposed restaurant, if parking were to become a requirement, it would be in accordance with the O *(Employment – Office)* zone district. Seven parking spaces are required for residential units, one ADA.
☐	Comply with Section 15-2419 – Parking Lot Surface Standards of the FMC. Depict compliance on Exhibit A.
☐	50 percent of areas not landscaped shall be shaded, of light colored materials with a Solar Reflectance Index (SRI) of at least 29, or a combination of shading and light colored materials as follows: 1. Permitted Types of Shading: Shade may be provided by solar shade structures, trees, or other equivalent materials. 2. Shading Tree Standards: Trees provided to satisfy the requirements of this section shall meet the following standards: a. Shading Tree Distribution: Trees provided to satisfy the requirements of this section shall be distributed relatively evenly throughout the parking area. b. Species: Trees provided to satisfy the requirements of this section shall be selected from a list maintained by the City and shall be of a species which can reasonably be expected to provide the required amount of shading within 15 years. c. Size: Trees provided to satisfy the requirements of this section shall be a minimum 15-gallon size with a one-inch diameter as measured 48 inches above natural grade. 3. Exception: This requirement shall not apply to RS Districts and truck loading and truck parking areas within Employment Districts.
☐	The landscape design plans at a minimum shall: a. Delineate and label each hydrozone by number, letter, or other methods; b. Identify each hydrozone as low, moderate, high water, or mixed water use; and c. Identify recreational areas, areas solely dedicated to edible plants, areas irrigated with recycled water, type and surface of water features, impermeable and permeable hardscape, and any infiltration systems. If you are using water features, recirculating water systems shall be used. A minimum 3-inch layer of mulch shall be applied on all exposed soil surfaces of planting areas except turf areas, creeping or rooting ground covers, or direct seeding applications where mulch is contraindicated. For soils less than 6% organic matter in the top 6 inches of soil, compost at a rate of a minimum of four cubic yards per 1,000 square feet of permeable area shall be incorporated to a depth of six inches into the soil. Turf is not allowed on slopes greater than 25% where the toe of the slope is adjacent to an

	impermeable hardscape. Verify on the plans. Add, sign and date the following statement on the plans: "I agree to comply with the requirements of the water efficient landscape ordinance and submit a complete Landscape Documentation Package. I have complied with the criteria of the ordinance and applied them for the efficient use of water in the landscape design plans. A diagram of the irrigation plan showing hydrozones shall be kept with the irrigation controller for subsequent management purposes. A Certificate of Completion shall be filled out and certified by either the designer of the landscape plans, irrigation plans, or the licensed landscape contractor for the project. An irrigation audit report shall be completed at the time of final inspection. **(Include these notes on Exhibit L).**
☐	All required landscaped areas shall be designed so that plant materials, at maturity, are protected from vehicle damage by providing a minimum two-foot clearance of low-growing plants where a vehicle overhang is permitted, or by wheel stops set a minimum of two feet from the back of curb.
☐	All required parking lot landscaping shall be within planters bounded by a concrete curb at least six inches wide and six inches high. Curbs separating landscaped areas from parking areas shall be designed to allow storm-water runoff to pass through.
☐	All landscaping and trees (existing and proposed) shall have free access for routine maintenance, including protected trees along the property lines that abut the adjoining property northeast of the subject property. As an option, gates can be installed as a component of the wrought iron fence to allow for maintenance access to this area.
☐	Provide planting schedule on Exhibit L.
☐	Depict and identify tree size by small, medium, or large and comply with Section 15-2307 on Exhibit L.
☐	Depict total landscape area on Exhibit L.
☐	Provide landscape irrigation plan.
☐	Pursuant to Section 15-2308 of the FMC, small trees shall have a mature height of less than 25 feet and be at least one inch in diameter at six inches above ground level. Small trees, generally, shall be planted 25 feet apart. Depict on Exhibit L.
☐	Landscaping and irrigation shall be installed and maintained in accordance with provisions and standards of Article 23 of the Citywide Development Code.
☐	Landscaping must be in place before issuance prior to occupancy and/or final inspection. A Hold on Occupancy/Final Inspection shall be placed on the proposed improvements until such time that landscaping has been approved and verified for proper installation by the Planning Division. **(Include this note on Exhibits A and L)**
☐	Prior to granting of occupancy/final inspection, a written certification, signed by a landscape professional approved by the Planning and Development Department Director, shall be submitted stating that the required landscaping and irrigation system have been installed in accordance with the landscaping and irrigation plans approved by the Planning Division.

	(Include this note on Exhibits A and L)
☐	The general standards of outdoor lighting and illumination have not been met. Please revise plans to comply with Section 15-2015-B of the FMC. • Aisles, passageways, recesses, etc., related to and within the building complex shall be illuminated with an intensity of at least 0.25 foot-candles at the ground level during the hours of darkness. Lighting devices shall be protected by weather and vandal-resistant covers. • In Multi-Family, Mixed-Use, and Commercial Districts, exterior lighting with an intensity of at least 0.25 foot-candles at the ground level shall be provided for a secure nighttime pedestrian environment by reinforcing entrances, public sidewalks and open areas with a safe level of illumination. • All exterior doors, during the hours of darkness, shall be illuminated with a minimum of 0.5 foot-candle of light. • All parking lots and garages shall be illuminated with a minimum of 0.5 foot-candle of light. • Maximum height of lighting fixtures shall not exceed 20 ft within 100 ft of any street frontage or residential district; 25 ft in any other location
☐	All parking stalls that propose a curb/wheel stop shall place the curb/wheel stop a minimum of 3 feet from the front of the parking stall to allow for a 3-foot overhang into the remainder of the parking stall. The size of the parking stall shall comply with the City of Fresno Parking Manual
☐	Correct property size from 0.74 acres to 0.81 acres on Exhibit O to reflect Lot Line Adjustment Application No. L22-00005.
☐	Revise number of new residential apartment units to six. Update total square footage of apartment units on Exhibit O.
☐	Add applicable notes to the site plan from the attached “Notes and Requirements for Entitlement Applications” document.

PART B - OTHER AGENCY COMMENTS AND CONDITIONS

To be checked when completed where applicable		
☐	1.	**Airports:** Airspace Protection Airspace review required for any objects (temporary or permanent) over 100 feet tall.
☐	2.	**Air Pollution Control District:** No comment
☐	3.	**DPU Solid Waste Division:** Solid Waste requirements are located within the Attachment section of the Planning Record under DPU CONDITIONS dated April 11, 2022.
☐	4.	**DPU Planning and Engineering:** Sewer requirements are located within the Attachment section of the Planning Record under DPU CONDITIONS dated April 11, 2022.
☐	5.	**DPU Water Division:** Water conditions shall be addressed with Sewer conditions in the Attachments section. See memo dated April 11, 2022.
☐	6.	**FAX Review:** No comment

☐ 7. **Fire Review:**

All back checks are performed electronically through the Accela Program (FAASTER portal). You must submit the following documentation to the Building Department: 1) Provide copy of the original submittals (drawings, calculations, and supporting documents) including mark-ups from the plan reviewers who worked on your documents. 2) Provide a complete set of revised drawings, calculations, and supporting documents addressing plan check comments (all changes shall be clouded). 3) Provide a detailed typed response to each item listed in the plan check correction comments document. If you have additional questions regarding back check submittals, please contact the Building Department.

If there are questions regarding FFD Development Policies, you may access them at: https://www.fresno.gov/fire-training/manuals-and-forms/.

All revisions to plans shall be called out with a cloud or delta.

All types of vehicle access shall maintain a minimum of 13 feet, 6 inch vertical clearance over the entire width of the access. (FFD Development Policy 403.002)

Provide approved police/fire bypass lock (“Best” padlock model 21B700 series or electric cylinder switch model 1W7B2) on drive access gate. All electrified gates shall be equipped with the Best electric cylinder lock 1W7B2. A Knox padlock may not be used in place of the Best padlock model 21B700. These locks can be purchased only through Sierra Lock & Glass, 1560 N. Palm Avenue, Fresno, CA 93728

Electric gates shall be provided with battery back-up.

Emergency vehicle access shall be designated by painting the curb red (top and side) and stenciling “FIRE LANE NO PARKING” in 3-inch white letters on the most vertical curb, at least every 50 feet. If no curb is present, a minimum 6-inch wide red stripe shall be painted along the edge of the roadway with “FIRE LANE” in 3-inch white letters at least every 50 feet. (FFD Development Policy 403.005

Provide note on site plan: Provide sign(s) (“17x22” minimum) at all public entrance drives to the property which state “Warning Vehicles stopped, parked or left standing in fire lanes will be immediately removed at owner’s expense – 22658(a) California Vehicle Code – Fresno Police Department 621-7000.”

Show the location of the fire sprinkler riser(s).

Show the location of the fire department connection. Fire department connections shall not be installed within five (5) feet of an building opening,
excluding a fire department riser access door. (FFD) Development Policy 405.025)

Fire department connections shall be located within forty (40) feet of a fire apparatus access lane. (FFD Development Policy 405.025)

Address Identification. For new and existing buildings, the fire code official is authorized to require approved address or building area identification signage as needed to readily determine the building or area of a building protected by fire department connections. FMC Section 10-50912.2.3

		Fire department connections shall be located on the street side of buildings, fully visible and recognizable from the street or nearest point of fire department vehicle access or as otherwise approved by the fire chief. 2019 CFC, Section 912.2.1. Required walking access shall be designed to prevent sharp turns and obstacles which would hinder the carrying of hoses, ground ladders and other hand held equipment. All gates across fire hose and equipment access points shall be a minimum of 4 foot clear width. All required fire hose and equipment access gates shall remain unlocked or be provided with Police/Fire bypass locks. ("Best" padlock model 21B700 series). A Knox padlock may not be used. Police/Fire bypass locks can be purchased only through Sierra Lock & Glass, 1560 N. Palm Avenue, Fresno, CA 93728 This project was reviewed by the Fire Department only for requirements related to water supply, fire hydrants, and fire apparatus access to the building(s) on site. Review for compliance with fire and life safety requirements for the building interior and its intended use are reviewed by both the Fire Department and the Building and Safety Section of DARM when a submittal for building plan review is made as required by the California Building Code by the architect or engineer of record for the building.
☐	8.	**Flood Metropolitan Flood Control District (FMFCD) Fees:** See attached FMFCD Notice of Requirements (NOR) memorandum dated April 13, 2022. NOR Review fees are due. $50 NOR Review Fee all due on this project.
☐	9.	**Fresno Unified School District:** The Fresno Unified School District (FUSD) response dated March 24, 2022, is uploaded to the attachment section of the record.
☐	10.	**Development And Impact Fee Estimate:** See development and impact fee estimate memo dated April 14, 2022, uploaded into Accela in the Attachments section labeled "P21-05568 - Craycroft Home Mixed-Use - 6545 N Palm Ave.pdf".
☐	11.	**Fresno County PW and Planning:** No comment
☐	12.	**Fresno County Environmental Health:** Recommended Conditions of Approval: • Prior to operation and issuance of building permits for food facilities, the applicant shall submit complete building plans and specifications. The applicant shall also apply for and obtain a permit to operate a food facility from the Fresno County Department of Public Health, Environmental Health Division. A permit, once issued, is nontransferable. Contact the Consumer Food Plan Check, Food Protection Program at (559) 600-3357. • Prior to alcohol sales, the applicant shall first obtain their alcoholic beverage license. Contact the California Alcoholic Beverage Control Department at (559) 225-6334 for more information. • The proposed project has the potential to expose nearby residents to elevated noise levels.

		Consideration should be given to your City's municipal code. The Operational Statement indicates special events including live music, it is recommended that a noise study be conducted in order to identify the potential noise impacts and offer mitigation alternatives. • Facilities that use and/or store hazardous materials and/or hazardous wastes shall meet the requirements set forth in the California Health and Safety Code (HSC), Division 20, Chapter 6.95, and the California Code of Regulations (CCR), Title 22, Division 4.5. Your proposed business will handle hazardous materials and/or hazardous waste and will be required to submit a Hazardous Materials Business Plan pursuant to the HSC, Division 20, Chapter 6.95 (http://cers.calepa.ca.gov/). Contact the Fresno County Hazmat Compliance Program at (559) 600-3271 for more information. • As a measure to protect ground water, all water wells and/or septic systems that exist or have been abandoned within the project area should be properly destroyed by an appropriately licensed contractor. • Should any underground storage tank(s) be found during the project, the applicant shall apply for and secure an Underground Storage Tank Removal Permit from the Fresno County Department of Public Health, Environmental Health Division. Contact the Fresno County Hazmat Compliance Program at (559) 600-3271 for more information. The following comments pertain to the remodel of the existing structure: • Should the structure have an active rodent or insect infestation, the infestation should be abated prior to remodel of the structure in order to prevent the spread of vectors to adjacent properties. • In the process of remodeling the existing structure, the contractor may encounter asbestos containing construction materials and materials coated with lead based paints. • If asbestos containing materials are encountered, contact the San Joaquin Valley Air Pollution Control District at (559) 230-6000 for more information. • If the structure was constructed prior to 1979 or if lead-based paint is suspected to have been used in these structure, then prior to remodel work the contractor should contact the following agencies for current regulations and requirements: California Department of Public Health, Childhood Lead Poisoning Prevention Branch, at (560) 620-5600. United States Environmental Protection Agency, Region 9, at (415) 947-8000. State of California, Industrial Relations Department, Division of Occupational Safety and Health, Consultation Service (CAL-OSHA) at (559) 454-5302.
☐	13.	**Flood Irrigation District:** Please see FID's comments in the memo dated April 13, 2022, uploaded to Attachments section.
☐	14.	**Long Range Planning:** No comment
☐	15.	**Police Review:** No comment
☐	16.	**PG&E:**

		Thank you for providing PG&E the opportunity to review your proposed plans for P21-05568 Craycroft Home dated March 23, 2022. Our review indicates your proposed improvements do not appear to directly interfere with existing PG&E facilities or impact our easement rights. Please note this is our preliminary review and PG&E reserves the right for additional future review as needed. This letter shall not in any way alter, modify, or terminate any provision of any existing easement rights. If there are subsequent modifications made to your design, we ask that you resubmit the plans to the email address listed below. If you require PG&E gas or electrical service in the future, please continue to work with PG&E's Service Planning department: https://www.pge.com/cco/. As a reminder, before any digging or excavation occurs, please contact Underground Service Alert (USA) by dialing 811 a minimum of 2 working days prior to commencing any work. This free and independent service will ensure that all existing underground utilities are identified and marked on-site. If you have any questions regarding our response, please contact the PG&E Plan Review Team at (877) 259-8314 or pgeplanreview@pge.com.
☐	17.	**Department Of Public Works: Traffic Planning:** See Public Works Traffic Planning conditions of approval and redlined exhibit, CP1, in the record attachments. For questions, please contact Andreina Aguilar at andreina.aguilar@fresno.gov or at 559-621-8674.
☐	18.	**Public Works: ROW Landscaping:** The two existing Maidenhair Trees (Ginkgo biloba) in the parkstrip are scheduled to remain and meet the Public Works requirement for street trees for this project. No additional street trees will be required at this time.
☐	19.	**Public Works – CFD:** No comment
☐	20.	**US Postal Service:** No comment
☐	21.	**Historic Preservation:** The following was reviewed and approved by Director J.Clark Subject: HP# 182 the Frank J. Craycroft Home; 6545 N. Palm Ave. [b. 1927] (APN 40776212); P21-05568; DP Pursuant of Fresno Municipal Code (FMC) Section 12-1617 (b) "The Director of the Development Department may approve, in the name of the Commission, non-substantial alterations to the Historic Resource based on the application presented." Application P21-05568 for a Development Permit pertains to HP# 182 Frank J. Craycroft Home an individually listed Historic Resource. Application P21-05568 proposes a zone clearance for the parcel, with current zoning O/UGM/CZ (Office/Urban Growth Management Conditions of Zoning). The scope of the entire project is a three phased project; phase one proposes the rehabilitation of Historic Resource HP #182. Phase 1 will need to be submitted under a separate permit which will require review and approval by the Historic Preservation Commission (HPC). No activities may take place which may directly or indirectly alter

		the Historic Resource pursuant to Fresno Municipal Code (FMC) Section 12-1617 without written approval by the Commission. However, application P21-05568 will have minimal to no impact to the historical integrity of the property and proposes no substantial alterations to historic features of this property. Staff approves the issuance of permit P21-05568. Note this project was presented to the Commission in August 2017 as a Workshop. Staff recommends the applicant present a Workshop at the forthcoming HPC meeting to refamiliarize the Commission with this project
☐	22.	**Council Member:** No comment
☐	23.	**Council District Committee:** The Council District 2 Project Review Committee recommended approval of this project on April 11, 2022. The motion carried two to zero. Please see uploaded draft minutes for additional information. Committee Recommended Applicant work with staff to update committee on progress with the future phases of the development.
☐	24.	**Building and Safety:** If tenant improvements are proposed, the items below require a separate process with additional fees and timelines, in addition to the Development Permit Application process: 1. Building plans are required to be submitted to Building and Safety Services Division for approval and permits for the proposed for tenant improvements and/or site modifications. a. Contact Christian Mendez in Building & Safety Division at 621-8088 or b. Christian.Mendez@fresno.gov. For information on submitting an online building permit application to the Building and Safety Services Division please use the following link to access tutorial videos: https://www.youtube.com/playlist?list=PL5HumS2qE3v5fJMX2ZXEDx4a-DBUfrbqA

PART C - PLANNING DEVELOPMENT CODE STANDARDS

1. Density and Intensity Standards

	Standard Requirement	Proposal	Complies?
Height	Max. 60’	28’-9”	Y
Front (Major Street)	Min. 15’	120’-5”	Y
Interior Side	Min. 0’	9’-2”	Y
Rear Setback	Min. 0’	5’	Y

Minimum Lot Size (sq. ft.)	Min. 7,500	35,283.6	Y
Minimum Lot Width (ft.)	Min. 65’	133’-4”	Y
Minimum Lot Depth (ft.)	Min. 110’	240’	Y
Floor Area Ratio (FAR)	Max. 2	.20	Y
Parking Setback	Min. 15’	20.5’	Y

2. Site Design: Development shall take place in accordance with Section 15-1304 of the FMC.

3. Parking and Loading

A. Provide short-term bicycle parking as required by Section 15-2429 of the FMC.
B. Long-term Bicycle parking shall be provided when required by the California Green Building Standards Code, as may be amended.
C. Loading spaces are required when a building is to be occupied by a use requiring the receipt or distribution by vehicles or trucks of material or merchandise. Comply with Section 15-2430-A of the FMC.
D. The project has been granted an exception to the parking requirements. The parking area or space requirements imposed by the provisions of this Code shall not apply for any building or structure which is older than 30 years old.

4. Landscaping

A. Landscaping must be in place before issuance of the certificate of occupancy. A Hold on Occupancy shall be placed on the proposed development until such time that landscaping has been approved and verified for proper installation by the Development Services Division. **(Include this note on the site and landscape plans.)**
B. New landscaping shall have an automatic irrigation system designed to provide adequate and efficient coverage of all plant material. Irrigation systems shall comply with the requirements of the California Green Building Standards Code and/or the California Model Water Efficient Landscape Ordinance and/or the California Plumbing Code as may be amended.
C. Additional landscaping requirements including landscape plan requirements, landscape design standards, and general landscaping standards can be found in Chapter 15, Article 23 of the Fresno Municipal Code.

5. Façade

A**. Building Articulation.** In the O District, all street-facing façades must include at least one projection or recess at least two feet in depth for every 25 feet of horizontal feet of wall.

B. **Building Materials and Finishes.**

1.In the O District, the following standards shall apply:
A. Each side of a building that is visible from a Major Street shall be designed with a complementary level of detailing and quality of materials.
B. There shall be a minimum of two exterior wall finish materials.

C. Veneers should turn corners, avoiding exposed edges and continue down the side of a building to a logical break, such as a change in wall plane. Material changes at outside corners should be avoided.
D. Building entrances and common areas shall be accentuated with enhanced finishes and materials that are durable and high quality and distinguish these spaces from other elements of the building.
E. Metal buildings should employ a variety of building forms shapes, colors, materials, and other architectural treatments to add visual interest and variety to the building. Architectural treatments should emphasize the primary entrance to the building.
F. Unless roofing materials are part of the design element (for example, tiles, concrete, or metal roofing elements), the ridge line elevation should not exceed the parapet elevation.
G. Windows shall maintain a consistent design character throughout the development and shall be of the same material on all elevations facing a street.
H. Parking areas and structures shall be designed to match and be compatible with the architectural character, materials, and colors of the overall development.

6. Fencing

	Standard Requirement	Proposal	Complies?
Fence, Front Yard	Inside front yard setback: 4’ max Outside front yard setback: 6’ max.	8’	N (Minor Deviation allows for 7’)
Fence, Interior Side Yard	Inside street side yard setback: 4’ max. Outside street side yard setback: 6’ max.	8’	N (Minor Deviation allows for 7’)

A. **Front Yard.**
   I. **Wrought Iron or Tubular Steel.** A fence up to four feet in height may be installed within any required front yard setback. Fences must be open a minimum of 80 percent (e.g., no more than 20 percent opaque) to allow for the passage of light and air.
   II. **All Other Materials.** All other fences within any required front yard setback are permitted up to three feet in height and shall comply with the main building setback, minus five feet.

B. **Street-Side Yard.**
   I. **Wrought Iron or Tubular Steel.** A fence up to four feet in height may be installed within any required front yard setback. Fences must be open a minimum of 80 percent (e.g., no more than 20 percent opaque) to allow for the passage of light and air.
   II. **All Other Materials.** All other fences within any required street side yard setback are permitted up to three feet in height and shall comply with the main building setback, minus five feet.

C. **Other Yards.** Outside of the required front yard and street-side yards, the maximum height for fences is seven feet (regardless of location on the site) unless the fence is part of Outdoor Storage per Section 15-2013, Outdoor Service Yards and Storage.

D. **Setbacks.** Unless a greater setback is required in another section of this Code, fences shall be set back 12 inches from the back of adjacent sidewalks, or from the curb or shoulder if there is no sidewalk. Fences may be placed on interior side and rear property lines.

Fences, greater than 125 feet in length in Residential Districts and/or along Major Streets, shall incorporate decorative pilasters with decorative caps spaced no more than 30 feet apart. This shall not apply to industrial districts, unless the industrial district is located on the same side of the street as existing, planned, or zoned residences.

Common Property Lines. A six-foot-high screen wall shall be provided on the interior lot lines where any non-residential use abuts a residential district and where multi-family development of four or more units abuts a single-family residential district. Walls shall step down to three feet in height along interior property lines within front yards. Not applicable.

7. Special Use Requirements: This section is not applicable.

Operational Requirements

PART D - PLANNING - OTHER REQUIREMENTS

1. Development shall take place in accordance with the policies of the Fresno General Plan, Bullard Community Plan and with the Employment - Office planned land use designation.
2. Development shall take place in accordance with the O/UGM/cz *(Office/Urban Growth Management/conditions of zoning)* zone district and all other applicable sections of the FMC.
3. Comply with the operational statement submitted for the proposed project dated March 23, 2022.
4. Development shall comply with any applicable conditions of zoning, (attached).
5. Property development standards and operational conditions are contained in Articles 13 (Employment Districts), 20 (General Site Requirements), 23 (Landscape), 24 (Parking and Loading) and 25 (Performance Standards). Any project revisions, development and operation must comply with these property development standards and operational conditions.
6. Development shall comply with the City of Fresno Parking Manual, California Building Code, and American Disabilities Act requirements.
7. Development shall take place in accordance with the “General Notes and Requirements for Entitlement Applications” listed below if applicable.

PART E - MISCELLANEOUS AND GENERAL NOTES AND REQUIREMENTS

Not all notes and requirements listed below are applicable to all projects.

1. Approval of this special permit may become null and void in the event that development is not completed in accordance with all the conditions and requirements imposed on this special permit, the Zoning Ordinance, and all Public Works Standards and Specifications. This special permit is granted, and the conditions imposed, based upon the Operation Statement provided by the applicant. The Operation Statement is material to the issuance of this special permit. Unless the conditions of approval specifically require operation inconsistent with the Operation Statement, a new or revised special permit is required if the operation of this establishment changes or becomes inconsistent with the Operation Statement. Failure to operate in accordance with the conditions and requirements imposed may result in revocation of the special permit or any other enforcement remedy available under the law. The Planning and Development Department shall not assume responsibility for any deletions or omissions resulting from the special permit review process or for additions or alterations to construction plans not specifically submitted and reviewed and approved pursuant to this special permit or subsequent amendments or revisions.
2. Approval of this special permit shall be considered null and void in the event of failure by the

applicant and/or the authorized representative, architect, engineer, or designer to disclose and delineate all facts and information relating to the subject property and the proposed development including, but not limited to, the following:

a) All existing and proposed improvements including but not limited to buildings and structures, signs and their uses, trees, walls, driveways, outdoor storage, and open land use areas on the subject property and all of the preceding which are located on adjoining property and may encroach on the subject property;

b) All public and private easements, rights-of-way and any actual or potential prescriptive easements or uses of the subject property; and,

c) Existing and proposed grade differentials between the subject property and adjoining property zoned or planned for residential use.

3. No land shall be used, and no structure shall be constructed, occupied, enlarged, altered, demolished, or moved in any zoning district, except in accordance with the provisions of this Code. Specific uses of land, buildings, and structures listed as prohibited in any zoning district are hereby declared to be detrimental to the public health, safety, and welfare.
4. Development shall take place in accordance with the Standards, Specifications, and Standard Drawings of the City of Fresno Public Works Department.
5. Development shall take place in accordance with all city, county, state and federal laws and regulations.
6. Owners and persons having ownership interest in businesses operating in the City of Fresno (including leasing out any commercial or industrial property, or renting out four or more dwelling units) are required by the Fresno Municipal Code to obtain a Business Tax Certificate. Contact the City of Fresno Finance Department's Business Tax Division at (559) 621-6880 for more information. Information and an application form is available at the following website: Click Here
7. All proposed building(s) or structure(s) constructed on the property must comply with the prevailing California Building Code Standards.
8. Any building modifications and/or additions not included with this application are not approved with this special permit and would be subject to a new special permit.
9. A permit granted under the Fresno Municipal Code shall automatically expire if it is not exercised or extended within three years of its issuance. Refer to section 15-5013, Expiration of Planning Entitlements, for more information about the exercise of rights.

FENCES/WALLS, LANDSCAPING, PARKING

10. Nothing in the Development Code shall be deemed to prohibit the erection of temporary fencing around construction sites in compliance with the Building Code and other applicable provisions of the Fresno Municipal Code.
11. Future fences shall be reviewed and approved by the Planning and Development Department prior to installation.
12. Fences, hedges, and walls shall be maintained in good repair, including painting, if required, and shall be kept free of litter or advertising. Where hedges are used as screening, trimming or pruning shall be employed as necessary to maintain the maximum allowed height. Fences shall be maintained and shall stand upright and shall not lean.
13. All planting and other landscape elements shall be permanently maintained in good growing condition. Such maintenance shall include, where appropriate, pruning, mowing, weeding, cleaning, fertilizing, and regular watering. Wherever necessary, plantings shall be replaced with other plant materials to insure continued compliance with applicable landscaping requirements. Yards shall be maintained free of refuse, debris, rubbish, or other accumulated matter and/or materials, and shall

be maintained clean. Grass shall not exceed six inches in height.

14. New landscaping shall have an automatic irrigation system designed to provide adequate and efficient coverage of all plant material. Irrigation systems shall comply with the requirements of the California Green Building Standards Code and/or the California Model Water Efficient Landscape Ordinance and/or the California Plumbing Code as may be amended.
15. Trees shall be maintained by property owners to be free from physical damage or injury arising from lack of water, chemical damage, accidents, vandalism, insects, and disease. Any tree showing such damage shall be replaced with another tree.
16. No tree for which a Tree Removal Permit is required shall be removed until all conditions of the permit have been satisfied and the decision has become final. In addition, tree(s) approved for removal in conjunction with a development application shall not be removed before the issuance of a Building Permit or unless all of the conditions of approval of the development applications are satisfied.
17. The review authority shall issue a Tree Removal Permit if any of the following general criteria is met:

    a) The tree(s) is irreparably diseased or presents a danger of falling that cannot be controlled or remedied through reasonable preservation and/or preventative procedures and practices so that the public health or safety requires its removal.

    b) The tree(s) can potentially cause substantial damage to existing or proposed main structure(s) (e.g. dwellings, other main structures, or public infrastructure) or interfere with utility services and cannot be controlled or remedied through reasonable relocation or modification of the structure or utility services.

    c) The retention of the tree(s) restricts the economic enjoyment of the property or creates an unusual hardship for the property owner by severely limiting the use of the property in a manner not typically experienced by owners of similarly zoned and situated properties, and the applicant has demonstrated to the satisfaction of the Review Authority that there are no reasonable alternatives to preserve the tree(s).
18. Landscaping must be in place before issuance of the certificate of occupancy. A Hold on Occupancy shall be placed on the proposed development until such time that landscaping has been approved and verified for proper installation by the Current Planning Division. **(Include this note on the landscape plan.)**
19. Future tenant improvements shall be reviewed and approved by the Planning and Development Department to ensure that adequate off-street parking is provided.
20. Trees required for parking lots are in addition to trees required elsewhere on the site as prescribed in other sections of the Fresno Municipal Code.
21. Parking lots, including landscaped areas, driveways, and loading areas, shall be maintained free of refuse, debris, or other accumulated matter and shall be kept in good repair at all times.
22. A minimum number of accessible parking stalls are required for the proposed project per State of California Building Code.
23. All accessible stalls shall be marked with the international symbol of spaces and a warning that vehicles in violation of Section 10-1017 of the Fresno Municipal Code shall be towed away. The international symbol and tow-away warning shall be posted conspicuously on seven-foot poles. **(Include this note on the site plan.)**
24. Applicants are encouraged to provide shared vehicle and pedestrian access between adjacent properties for convenience, safety, and efficient circulation. A joint access covenant shall be required. **(Include this note on the site plan.)**
25. All general standards of Section 15-2015 of the Fresno Municipal Code shall apply when lighting is provided to illuminate parking, sales or display areas. **Depict all proposed lights on the site plan.**

26. Bicycle parking spaces shall be supplied according to Table 15-2429-D: Required On-Site Bicycle Parking Spaces of the Fresno Municipal Code. Each bicycle parking space shall be a minimum of 30 inches in width and eight feet in length and shall be accessible without moving another bicycle. At least 30 inches of clearance shall be provided between bicycle parking spaces and adjacent walls, poles, landscaping, street furniture, drive aisles, and pedestrian ways and at least five feet from vehicle parking spaces to allow for the maneuvering of bikes. Overhead clearance shall be a minimum of seven feet. A minimum five-foot aisle between each row of bicycle parking shall be provided for bicycle maneuvering beside or between each row, when multiple rows are proposed. Bicycle parking spaces shall not encroach into pedestrian ways, landscaped areas, or other required open spaces, and shall be located proximal to structures.
27. All general provisions of Section 15-2403 of the Fresno Municipal Code shall apply to all parking areas.
28. The parking lot is required to meet the *City of Fresno's Parking Manual, Public Works Standards (P-21, P-22, and P-23) and Specifications*. Parking must also comply with the California Building Code's accessibility requirements and the Fire and Solid Waste Department's minimum turning templates. Contact the Planning and Development Department for Parking Manual questions.

SIGNAGE

29. All future signs shall be architecturally compatible with the proposed building(s). Provide a set of drawings, with descriptive information, including, materials, design and colors to allow for a preliminary assessment of the future signage. It is recommended that you provide a copy of the signage early in the project process to allow for staff comment.
30. Signs, *other than directional signs, if applicable*, are not approved for installation as part of this special permit. **(Include this note on the site plan.)**
31. All proposed signs shall conform to the current sign ordinance. The submittal checklist for signs is available online at: Click Here
32. Window signs limited to the hours of operation, address, occupancy, and emergency information, subject to the following standards:

    a) Operational windows signs shall not be mounted or placed on windows higher than the second story.

    b) The maximum area of exempt window signage shall not exceed three square feet in area.
33. Banners, streamers, moving signs, and inflatables (including air dancers, balloons, and similar objects) are allowed subject to Temporary Use Permit approval for establishments within Non-Residential Districts. Signs of this type do not count toward total maximum sign area. No sign per this section shall be displayed for more than 30 days, and a period of 30 must lapse before displaying another sign. Signs shall not be displayed for more than 60 total days during a calendar year.
34. Every sign displayed within the city, including exempt signs, shall be maintained in good physical condition and shall comply with adopted regulations. All defective or broken parts shall be replaced. Exposed surfaces shall be kept clean, in good repair, and painted where paint is required.

MISCELLANEOUS

35. Noise levels shall not exceed the decibel levels described in Section 15-2506 of the Fresno Municipal Code at any time, measured at the nearest subject property line.
36. No vibration shall be produced that is transmitted through the ground and is discernible without the aid of instruments by a reasonable person at the lot lines of the site. Vibrations from temporary construction, demolition, and vehicles that enter and leave the subject parcel (e.g., construction

equipment, trains, trucks, etc.) are exempt from this standard.

37. Lights shall be placed to deflect light away from adjacent properties and public streets, and to prevent adverse interference with the normal operation or enjoyment of surrounding properties. Direct or sky-reflected glare from floodlights shall not be directed into any other property or street. Except for public street lights and stadium lights, no light, combination of lights, or activity shall cast light onto a residentially zoned property, or any property containing residential uses, exceeding one-half foot-candle.

38. No use shall be operated such that significant, direct glare, incidental to the operation of the use is visible beyond the boundaries of the lot where the use is located. Windows shall not cause glare that may disrupt adjoining properties, traffic on adjacent streets, etc. Glare or heat reflected from building materials shall be mitigated so as to not disrupt surrounding properties.

39. The address listed in the conditions of approval is the 'Official Address' given to the building. If you would like separate suite or unit numbers for a building, provide a floor plan and contact the City of Fresno Planning and Development Department for 'Official Addresses'. **Only those addresses assigned by the City of Fresno will be recognized as 'Official Addresses'**. The United States Post Office will only recognize addresses assigned by the City of Fresno. If a non-official address is given to a building and or/separate suites, the City of Fresno has the authority to charge a fee and have those addresses corrected. In addition, the United States Post Office will cease mail delivery to those addresses that are not 'Official Addresses'.

40. All projects, including projects that involve less than one acre of property, are required to comply with the City of Fresno's Urban Storm Water Quality Management and Discharge Control Ordinance, Fresno Municipal Code Chapter 6, Article 7 (Sections 6-701 *et seq*.)

    When a project involves one acre or more of construction activity (including, but not limited to, grading) the developer is required to obtain a stormwater discharge permit for construction, with a Notice of Intent (NOI) filed **prior to** commencement of any grading construction activity. Contact the Fresno office of the California Regional Water Quality Control Board at (559) 445-6281 regarding the required NOI and stormwater discharge permit. Additional information on California's construction stormwater regulation may be obtained from the Water Board via the internet: *www.waterboards.ca.gov/water_issues/programs/stormwater/construction.shtml*

    Helpful information for preparing and implementing stormwater pollution prevention plans may also be obtained from the California Stormwater Quality Association via its website, *www.casqa.org*

    When a project involves specified nonresidential activities (certain commercial and industrial activities), an ongoing industrial stormwater discharge permit is also required. Contact the Fresno office of the California Regional Water Quality Control Board at (559) 445-6281 to find out whether your project/business requires an industrial stormwater discharge permit, and to obtain details on securing this permit. Additional information on industrial stormwater regulations may be obtained from the following website: *www.waterboards.ca.gov/water_issues/programs/stormwater/industrial.shtml*,

    The California Stormwater Quality Association has additional information on preparing stormwater pollution prevention plans for industrial activities (*www.casqa.org*).

41. Screen all roof-mounted equipment from the view of public rights-of-way. **Depict all mechanical equipment on site plan and elevations.**

42. If archaeological and/or animal fossil material is encountered during project surveying, grading, excavating, or construction, work shall stop immediately. **(Include this note on the site plan.)**

43. If there are suspected human remains, the Fresno County Coroner shall be immediately contacted. If the remains or other archaeological material is possibly Native American in origin, the Native American Heritage Commission (Phone: (916) 653-4082) shall be immediately contacted, and the

California Archaeological Inventory/Southern San Joaquin Valley Information Center (Phone: (805) 644-2289) shall be contacted to obtain a referral list of recognized archaeologists. An archeological assessment shall be conducted for the project, the site shall be formally recorded, and recommendations made to the City as to any further site investigation or site avoidance/preservation. **(Include this note on the site plan.)**

44. If animal fossils are uncovered, the Museum of Paleontology, U.C. Berkeley shall be contacted to obtain a referral list of recognized paleontologists. An assessment shall be conducted by a paleontologist and, if the paleontologist determines the material to be significant, it shall be preserved. **(Include this note on the site plan.)**
45. Connection to a municipal water system is required unless approved measures are included in the project conditions of approval for an alternative water supply.
46. Connection to a municipal City of Fresno sewer system is required unless approved measures are included in the project conditions for alternative wastewater treatment facilities.
47. City of Fresno water and sewer connection charge obligations applicable to this project will be computed during the building construction plan check process and shall be payable at time of issuance of building permit unless other arrangements have been approved to defer such payments to a later date. For information relating to water and sewer service requirements and connection charges, contact Frank Saburit at (559) 621-8797.
48. Open street cuts are not permitted; all utility connections must be bored.
49. CROSS-CONNECTION CONTROL. A backflow prevention device may be required on the water service. Contact the Department of Public Utilities, Water Division (559) 621-5300 for requirements relating to approved devices, locations, testing and acceptance. This requirement must be satisfied prior to final occupancy.
50. This project was reviewed by the Fire Department only for requirements related to water supply, fire hydrants, and fire apparatus access to the building(s) on site. Review for compliance with fire and life safety requirements for the building interior and its intended use are reviewed by both the Fire Department and the Building and Safety Section of the Planning and Development when a submittal for building plan review is made as required by the California Building Code by the architect or engineer of record for the building.
51. Open storage (outside an enclosed building) shall be limited to vehicles, boats, recreational vehicles, and trailers. Outdoor storages areas shall be screened from public view by building façades or solid fences. At the discretion of the Review Authority, the treatment of the ground surface of the open storage area may be gravel or other materials as prescribed by the San Joaquin Valley Air Pollution Control District, the Public Works Department, the Fire Department, and the Fresno Metropolitan Flood Control District. All open storage must be depicted on the site plan and described in operational statement. If it is not, it is not allowed on the site.
52. If video surveillance cameras are required or installed, provide signs under the surveillance cameras which notify the public that the subject property is monitored by video surveillance.

FEES

(Not all fees will be applicable to all projects.
Please reach out to Frank Saburit at (559) 621-8797 for fee questions.)

53. NOTICE TO PROJECT APPLICANT: In accordance with the provisions of Government Code Section 66020(d)(1), the imposition of fees, dedication, reservations or exactions for this project are subject to protest by the project applicant at the time of approval or conditional approval of the development or within 90 days after the date of imposition of fees, dedications, reservation, or exactions imposed on the development project. This notice does not apply to those fees, dedications, reservations, or exactions which were previously imposed and duly noticed; or, where no notice was previously required under the provisions of Government Code Section 66020(d)(1) in

effect before January 1, 1997.

54. CITYWIDE DEVELOPMENT IMPACT FEES

    a) Traffic Signal Charge (Fresno Municipal Code Section 12-4.1101 to 12-4.1103) This project shall pay its Traffic Signal Mitigation Impact Fee at the time of building permit based on the trip generation rate(s) as set forth in the latest Master Fee Schedule. Refer to the adopted Master Fee Schedule for fee rate. This fee shall be paid at time of building permit.

    b) Fire Facilities Fee (Fresno Municipal Code Section 12-4.901 to 12-4.906) (based on building square footage, or residential units)

    c) Police Facilities Fee (Fresno Municipal Code Section 12-4.801 to 12-4.806) (based on building square footage, or residential units).

    d) Parks Facilities Fee (Fresno Municipal Code Section 12-4.701 to 12-4.706) (based on the number of residential units)

55. CITYWIDE REGIONAL AND NEW GROWTH MAJOR STREET IMPACT FEES (Fresno Municipal Code Section 12-4.1006).

    a) Street Impact Fees shall be due and payable at the time of building permit issuance unless otherwise required by State law.

    b) Street Impact Fees will be a condition on all development entitlements granted.

56. FRESNO COUNTY FACILITY IMPACT FEE
    Fresno County adopted a Facilities Impact Fee, but the requirement to pay this fee was subsequently suspended by Fresno County. If the fee has been reinstated at the time of issuance of building permits for this project, or an alternative fee system has been adopted by Fresno County, proof of payment or payment of this fee will be required for issuance of building permits.

57. REGIONAL TRANSPORTATION MITIGATION FEE (RTMF)
    Pay the RTMF fee to the Joint Powers Agency located at 2035 Tulare Street, Suite 201, Fresno, CA 93721; (559) 233-4148, ext. 200; www.fresnocog.org. Provide proof of payment or exemption prior to issuance of certificate of occupancy.

58. SCHOOL FEES
    School fees must be paid, if required, prior to the issuance of building permits. Contact the applicable school district to obtain fee amount. Provide proof of payment (or no fee required) prior to the issuance of building permits.

59. FRESNO METROPOLITAN FLOOD CONTROL DISTRICT (FMFCD) FEES

    a) A FMFCD Development Fee is required for review of proposed development projects, including applications for plan amendments, rezones, special permits, subdivisions, and grading plans. This fee is based on project acreage and must be paid directly to FMFCD in order for that agency to review projects and provide a Notice of Requirements. For more information, contact the FMFCD at (559) 456-3292.

    b) FMFCD drainage fees are due, if required, prior to issuance of building permits and are payable at the rate in place at the time of building permit issuance. Unpaid drainage fee obligations that were unpaid for a prior project at the site of a new project must be satisfied by the developer of the new project. Drainage fees may be paid at the Planning and Development Department prior to, or at the time of building permit issuance. They may also be paid directly to FMFCD, and proof of payment provided to the City, in order to obtain construction permits.

60. SEWER CONNECTION CHARGES (Fresno Municipal Code Section 6-304(a)). The following sewer connection charges may be required and will be payable at the fee rate listed in the Master Fee Schedule at the time payment is due. New sewer connection charges adopted by the Council prior to the issuance of building permits may also be applied.

    a) Lateral Sewer Charge (based on property frontage to a depth of 100')

b) Oversize Sewer Charge (based on property frontage to a depth of 100')

c) Wastewater Facilities Charge

d) Trunk Sewer Charge

Effective January 9, 1999, Ordinance No. 98-97 also amended certain sewer connection charges. Fresno Municipal Code Article 15, Section 12 provides property owners the incentives and deletes certain sewer connection charges pursuant to the Simple Tiered Equity Program (STEP) and the Employment Development Program (EDP). For additional information on the STEP and EDP, contact the Department of Public Utilities, Administration Division at (559) 621-8600.

61. WATER CONNECTION CHARGES: (Fresno Municipal Code Sections 6-507 to 6-513). The following water connection charges may be required and will be payable at the fee rate listed in the Master Fee Schedule at the time payment is due. New water connection charges adopted by the Council **prior to** issuance of building permits may also be applied.

    a) Frontage Charge (based on property frontage)

    b) Service Charges (based on service size required by applicant)

    c) Meter Charges (based on service need)

    d) Water Capacity fee (based on size of meter)

62. Deferment of the payment of Citywide development impact fees for Fire, Police, Parks, Streets, and Traffic Signals is available for projects located within the Downtown Priority Areas in accordance with the provisions of City of Fresno Resolutions Nos. 2009-265 and 2010-19.

PUBLIC WORKS DEPARTMENT GENERAL NOTES
(to be added to the site plan)

63. Any survey monuments within the area of construction shall be preserved or reset by a person licensed to practice land surveying in the State of California.
64. Repair all damaged and/or off-grade concrete street improvements as determined by the Construction Management Engineer, prior to occupancy.
65. Two working days before commencing excavation operations within the street right-of-way and/or utility easements, all existing under-ground facilities shall have been located by underground services.
66. The performance of any work within the public street right-of-way requires a street work permit prior to commencement of work. All required street improvements must be completed and accepted by the City prior to occupancy.
67. Contact the Public Works Department, Traffic Engineering at (559) 621-8800, 10 working days prior to any offsite concrete construction.
68. For Standard Drawings Click Here
69. For Traffic Planning's website with useful links, additional notes, sample of legend, Parking Manual and Traffic Study Checklist Click Here.
70. Traffic Planning Checklist Click Here.
71. For Traffic Study questions please contact Jill Gormley at (559) 621-8792 or via email at Jill.Gormley@fresno.gov.

City of Fresno General Notes

City of Fresno Notes and Requirements for Entitlement Applications

GENERAL

1) Approval of this special permit may become null and void in the event that development is not completed in accordance with all the conditions and requirements imposed on this special permit, the Citywide Development Code, and all Public Works Standards and Specifications. This special permit is granted, and the conditions imposed, based upon the Operational Statement provided by the applicant. The Operational Statement is material to the issuance of this special permit. Unless the conditions of approval specifically require operation inconsistent with the Operational Statement, a new or revised special permit is required if the operation of this establishment changes or becomes inconsistent with the Operational Statement. Failure to operate in accordance with the conditions and requirements imposed may result in revocation of the special permit or any other enforcement remedy available under the law. The Planning and Development Department shall not assume responsibility for any deletions or omissions resulting from the special permit review process or for additions or alterations to construction plans not specifically submitted and reviewed and approved pursuant to this special permit or subsequent amendments or revisions.

2) Approval of this special permit shall be considered null and void in the event of failure by the applicant and/or the authorized representative, architect, engineer, or designer to disclose and delineate all facts and information relating to the subject property and the proposed development including, but not limited to, the following:

a) All existing and proposed improvements including but not limited to buildings and structures, signs and their uses, trees, walls, driveways, outdoor storage, and open land use areas on the subject property and all of the preceding which are located on adjoining property and may encroach on the subject property.

b) All public and private easements, rights-of-way and any actual or potential prescriptive easements or uses of the subject property; and,

c) Existing and proposed grade differentials between the subject property and adjoining property zoned or planned for residential use.

3) No land shall be used, and no structure shall be constructed, occupied, enlarged, altered, demolished, or moved in any zoning district, except in accordance with the provisions of this Code. Specific uses of land, buildings, and structures listed as prohibited in any zoning district are hereby declared to be detrimental to the public health, safety, and welfare.

4) Development shall take place in accordance with the Standards, Specifications, and Standard Drawings of the City of Fresno Public Works Department; https://www.fresno.gov/publicworks/wpcontent/uploads/sites/17/2016/09/CityofFresnoStandardSpecifications2016January.pdf

5) Development shall take place in accordance with all city, county, state and federal laws and regulations.

6) Owners and persons having ownership interest in businesses operating in the City of Fresno are required by the Fresno Municipal Code to obtain a Business Tax Certificate. Contact the City of Fresno Finance Department's Business Tax Division at (559) 621-6880 for more information. Information and an application form are available at the following website: http://www.fresno.gov/Government/DepartmentDirectory/Finance/BusinessLicenseandTax/businesstaxapplicaiton.htm

7) All proposed building(s) or structure(s) constructed on the property must comply with the prevailing California Building Code Standards.

8) Any building modifications and/or additions not included with this application are not approved with this special permit and would be subject to a new special permit.

9) A permit granted under the Fresno Municipal Code shall automatically expire if it is not exercised or extended within three years of its issuance. Refer to Section 15-5013, Expiration of Planning Entitlements, for more information about the exercise of rights.

FENCES/WALLS, LANDSCAPING, PARKING

10) Nothing in this Development Code shall be deemed to prohibit the erection of temporary fencing around construction sites in compliance with the Building Code and other applicable provisions of the Fresno Municipal Code.

11) Future fences shall be reviewed and approved by the Planning and Development Department prior to installation.

12) Fences, hedges, and walls shall be maintained in good repair, including painting, if required, and shall be kept free of litter or advertising. Where hedges are used as screening, trimming or pruning shall be employed as necessary to maintain the maximum allowed height. Fences shall be maintained and shall stand upright and shall not lean.

13) All planting and other landscape elements shall be permanently maintained in good growing condition. Such maintenance shall include, where appropriate, pruning, mowing, weeding, cleaning, fertilizing, and regular watering. Wherever necessary, plantings shall be replaced with other plant materials to insure continued compliance with applicable landscaping requirements. Yards shall be maintained free of refuse, debris, rubbish, or other accumulated matter and/or materials, and shall be maintained clean. Grass shall not exceed six inches in height.

14) New landscaping shall have an automatic irrigation system designed to provide adequate and efficient coverage of all plant material. Irrigation systems shall comply with the requirements of the California Green Building Standards Code and/or the California Model Water Efficient Landscape Ordinance and/or the California Plumbing Code as may be amended.

15) Trees shall be maintained by property owners to be free from physical damage or injuring arising from lack of water, chemical damage, accidents, vandalism, insects, and disease. Any tree showing such damage shall be replaced with another tree.

16) No tree for which a Tree Removal Permit is required shall be removed until all conditions of the permit have been satisfied and the decision has become final. In addition, tree(s) approved for removal in conjunction with a development application shall not be removed before the issuance of a Building Permit or unless all of the conditions of approval of the development applications are satisfied.

17) The review authority shall issue a Tree Removal Permit if any of the following general criteria is met:

a) The tree(s) is irreparably diseased or presents a danger of falling that cannot be controlled or remedied through reasonable preservation and/or preventative procedures and practices so that the public health or safety requires its removal.

b) The tree(s) can potentially cause substantial damage to existing or proposed main structure(s) (e.g. dwellings, other main structures, or public infrastructure) or interfere with utility services and cannot be controlled or remedied through reasonable relocation or modification of the structure or utility services. c) The retention of the tree(s) restricts the economic enjoyment of the property or creates an unusual hardship for the property owner by severely limiting the use of the property in a manner not typically experienced by owners of similarly zoned and situated properties, and the applicant has demonstrated to the satisfaction of the Review Authority that there are no reasonable alternatives to preserve the tree(s).

18) Landscaping must be in place before issuance of the certificate of occupancy. A Hold on Occupancy shall be placed on the proposed development until such time that landscaping has been approved and verified for proper installation by the Current Planning Division.

19) Future tenant improvements shall be reviewed and approved by the Planning and Development Department to ensure that adequate off-street parking is provided.

20) Trees required for parking lots are in addition to trees required elsewhere on the site as prescribed in other sections of the Fresno Municipal Code.

21) Parking lots, including landscaped areas, driveways, and loading areas, shall be maintained free of refuse, debris, or other accumulated matter and shall be kept in good repair at all times.

22) A minimum number of accessible parking stalls are required for the proposed project per State of California Building Code.

APPL. NO. P21-05568 EXHIBIT A-1 DATE 03/23/2022

PLANNING REVIEW BY _____ DATE _____

TRAFFIC ENG. _____ DATE _____

APPROVED BY _____ DATE _____

CITY OF FRESNO DARM DEPT

City of Fresno General Notes (cont'd)

23) All accessible stalls shall be marked with the international symbol of spaces and a warning that vehicles in violation of Section 10-1017 of the Fresno Municipal Code shall be towed away. The international symbol and tow-away warning shall be posted conspicuously on seven-foot poles.

24) Applicants are encouraged to provide shared vehicle and pedestrian access between adjacent properties for convenience, safety, and efficient circulation. A joint access covenant shall be required.

25) All general standards of Section 15-2015 of the Fresno Municipal Code shall apply when lighting is provided to illuminate parking, sales or display areas. Depict all proposed lights on the site plan.

26) Bicycle parking spaces shall be supplied according to Table 15-2429-D: Required OnSite Bicycle Parking Spaces of the Fresno Municipal Code. Each bicycle parking space shall be a minimum of 30 inches in width and eight feet in length and shall be accessible without moving another bicycle. At least 30 inches of clearance shall be provided between bicycle parking spaces and adjacent walls, poles, landscaping, street furniture, drive aisles, and pedestrian ways and at least five feet from vehicle parking spaces to allow for the maneuvering of bikes. Overhead clearance shall be a minimum of seven feet. A minimum five foot aisle between each row of bicycle parking shall be provided for bicycle maneuvering beside or between each row, when multiple rows are proposed. Bicycle parking spaces shall not encroach into pedestrian ways, landscaped areas, or other required open spaces, and shall be located proximal to structures.

27) All general provisions of Section 15-2403 of the Fresno Municipal Code shall apply to all parking areas.

28)The parking lot is required to meet the City of Fresno's Parking Manual, Public Works Standards (P-21, P-22, and P-23) and Specifications (https://www.fresno.gov/publicworks/wp-content/uploads/sites/17/2016/09/ParkingManual.pdf). Parking must also comply with the California Building Code's accessibility requirements and the Fire and Solid Waste Department's minimum turning templates. Contact the Planning and Development Department for Parking Manual questions.

SIGNAGE

29) All future signs shall be architecturally compatible with the proposed building(s). Provide a set of drawings, with descriptive information, including, materials, design and colors to allow for a preliminary assessment of the future signage. It is recommended that you provide a copy of the signage early in the project process to allow for staff comment.

30) Signs, other than directional signs, if applicable, are not approved for installation as part of this special permit.

31) All proposed signs shall conform to the current sign ordinance. The submittal checklist for signs is available online at https://www.fresno.gov/darm/planningdevelopment/applications-forms-fees/#tab-14

32) Window signs limited to the hours of operation, address, occupancy, and emergency information, subject to the following standards:

a) Operational windows signs shall not be mounted or placed on windows higher than the second story.

b) The maximum area of exempt window signage shall not exceed three square feet in area.

33) Banners, streamers, moving signs, and inflatables (including air dancers, balloons, and similar objects) are allowed subject to Temporary Use Permit approval for establishments within Non-Residential Districts. Signs of this type do not count toward total maximum sign area. No sign per this section shall be displayed for more than 30 days, and a period of 30 days must lapse before displaying another sign. Signs shall not be displayed for more than 60 total days during a calendar year.

34) Every sign displayed within the city, including exempt signs, shall be maintained in good physical condition and shall comply with adopted regulations. All defective or broken parts shall be replaced. Exposed surfaces shall be kept clean, in good repair, and painted where paint is required.

MISCELLANEOUS

35) Noise levels shall not exceed the decibel levels described in Section 15-2506 of the FMC at anytime, measured at the nearest subject property line.

36) No vibration shall be produced that is transmitted through the ground and is discernible without the aid of instruments by a reasonable person at the lot lines of the site. Vibrations from temporary construction, demolition, and vehicles that enter and leave the subject parcel (e.g., construction equipment, trains, trucks, etc.) are exempt from this standard.

37) Lights shall be placed to deflect light away from adjacent properties and public streets, and to prevent adverse interference with the normal operation or enjoyment of surrounding properties. Direct or sky-reflected glare from floodlights shall not be directed into any other property or street. Except for public street lights and stadium lights, no light, combination of lights, or activity shall cast light onto a residentially zoned property, or any property containing residential uses, exceeding one-half footcandle.

38) No use shall be operated such that significant, direct glare, incidental to the operation of the use is visible beyond the boundaries of the lot where the use is located. Windows shall not cause glare that may disrupt adjoining properties, traffic on adjacent streets, etc. Glare or heat reflected from building materials shall be mitigated so as to not disrupt surrounding properties.

39) The address listed in the conditions of approval is the 'Official Address' given to the building. If you would like separate suite or unit numbers for a building, provide a floor plan and contact the City of Fresno Planning and Development Department for 'Official Addresses'. Only those addresses assigned by the City of Fresno will be recognized as 'Official Addresses'. The United States Post Office will only recognize addresses assigned by the City of Fresno. If a non-official address is given to a building and or/separate suites, the City of Fresno has the authority to charge a fee and have those addresses corrected. In addition, the United States Post Office will cease mail delivery to those addresses that are not 'Official Addresses'.

40) All projects, including projects that involve less than one acre of property, are required to comply with the City of Fresno's Urban Storm Water Quality Management and Discharge Control Ordinance, Fresno Municipal Code (FMC) Chapter 6, Article 7 (FMC Sections 6-701 et seq.) When a project involves one acre or more of construction activity (including, but not limited to, grading) the developer is required to obtain a stormwater discharge permit for construction, with a Notice of Intent (NOI) filed prior to commencement of any grading construction activity. Contact the Fresno office of the California Regional Water Quality Control Board at (559) 445-6281 regarding the required NOI and stormwater discharge permit. Additional information on California's construction stormwater regulation may be obtained from the Water Board via the internet: www.waterboards.ca.gov/water_issues/programs/stormwater/construction.shtml. Helpful information for preparing and implementing stormwater pollution prevention plans may also be obtained from the California Stormwater Quality Association via its website, www.casqa.org. When a project involves specified nonresidential activities (certain commercial and industrial activities), an ongoing industrial stormwater discharge permit is also required. Contact the Fresno office of the California Regional Water Quality Control Board at (559) 445-6281 to find out whether your project/business requires an industrial stormwater discharge permit, and to obtain details on securing this permit. Additional information on industrial stormwater regulations may be obtained from the following website: www.waterboards.ca.gov/water_issues/programs/stormwater/industrial.shtml, The California Stormwater Quality Association has additional information on preparing stormwater pollution prevention plans for industrial activities (www.casqa.org).

41) Screen all roof-mounted equipment from the view of public rights-of-way. Depict all mechanical equipment on site plan and elevations.

42) If archaeological and/or animal fossil material is encountered during project surveying, grading, excavating, or construction, work shall stop immediately.

43) If there are suspected human remains, the Fresno County Coroner shall be immediately contacted. If the remains or other archaeological material is possibly Native American in origin, the Native American Heritage Commission (Phone: (916) 653-4082) shall be immediately contacted, and the California Archaeological Inventory/Southern San Joaquin Valley Information Center (Phone: (805) 644-2289) shall be contacted to obtain a referral list of recognized archaeologists. An archeological assessment shall be conducted for the project, the site shall be formally recorded, and recommendations made to the City as to any further site investigation or site avoidance/preservation.

City of Fresno General Notes (cont'd)

44) If animal fossils are uncovered, the Museum of Paleontology, U.C. Berkeley shall be contacted to obtain a referral list of recognized paleontologists. An assessment shall be conducted by a paleontologist and, if the paleontologist determines the material to be significant, it shall be preserved.

45) Connection to a municipal water system is required unless approved measures are included in the project conditions of approval for an alternative water supply.

46) Connection to a municipal City of Fresno sewer system is required unless approved measures are included in the project conditions for alternative wastewater treatment facilities.

47) City of Fresno water and sewer connection charge obligations applicable to this project will be computed during the building construction plan check process and shall be payable at time of issuance of building permits unless other arrangements have been approved to defer such payments to a later date. For information relating to water and sewer service requirements and connection charges, contact Frank Saburit at (559) 621-8797.

48) Open street cuts are not permitted; all utility connections must be bored.

49) CROSS-CONNECTION CONTROL. A backflow prevention device may be required on the water service. Contact the Department of Public Utilities, Water Division (559) 621-5300 for requirements relating to approved devices, locations, testing and acceptance. This requirement must be satisfied prior to final occupancy.

50) This project was reviewed by the Fire Department only for requirements related to water supply, fire hydrants, and fire apparatus access to the building(s) on site. Review for compliance with fire and life safety requirements for the building interior and its intended use are reviewed by both the Fire Department and the Building and Safety Section of the Planning and Development Department when a submittal for building plan review is made as required by the California Building Code by the architect or engineer of record for the building.

51) Open storage (outside an enclosed building) shall be limited to vehicles, boats, recreational vehicles, and trailers. Outdoor storages areas shall be screened from public view by building façades or solid fences. At the discretion of the Review Authority, the treatment of the ground surface of the open storage area may be gravel or other materials as prescribed by the San Joaquin Valley Air Pollution Control District, the Public Works Department, the Fire Department, and the Fresno Metropolitan Flood Control District. All open storage must be depicted on the site plan and described in operation. If it is not, it is not allowed on the site.

52) If video surveillance cameras are required or installed, provide signs under the surveillance cameras which notify the public that the subject property is monitored by video surveillance.

FEES

53) NOTICE TO PROJECT APPLICANT: In accordance with the provisions of Government Code Section 66020(d)(1), the imposition of fees, dedication, reservations or exactions for this project are subject to protest by the project applicant at the time of approval or conditional approval of the development or within 90 days after the date of imposition of fees, dedications, reservation, or exactions imposed on the development project. This notice does not apply to those fees, dedications, reservations, or exactions which were previously imposed and duly noticed; or, where no notice was previously required under the provisions of Government Code Section 66020(d)(1) in effect before January 1, 1997.

54) CITYWIDE DEVELOPMENT IMPACT FEES

a) Traffic Signal Charge (FMC Section 12-4.1101 to 12-4.1103) This project shall pay its Traffic Signal Mitigation Impact Fee at the time of building permit based on the trip generation rate(s) as set forth in the latest edition of the Master Fee Schedule. Refer to the adopted Master Fee Schedule for fee rate. This fee shall be paid at time of building permit.

b) Fire Facilities Fee (FMC Section 12-4.901 to 12-4.906) (based on building square footage, or residential units)

c) Police Facilities Fee (FMC Section 12-4.801 to 12-4.806) (based on building square footage, or residential units)

d) Parks Facilities Fee (FMC Section 12-4.701 to 12-4.706) (based on the number of residential units)

55) CITYWIDE REGIONAL AND NEW GROWTH MAJOR STREET IMPACT FEES (FMC Section 12-4.1006)

a) Street Impact Fees shall be due and payable at the time of building permit issuance unless otherwise required by State law.

b) Street Impact Fees will be a condition on all development entitlements granted.

56) FRESNO COUNTY FACILITY IMPACT FEE -- Fresno County adopted a Facilities Impact Fee, but the requirement to pay this fee was subsequently suspended by Fresno County. If the fee has been reinstated at the time of issuance of building permits for this project, or an alternative fee system has been adopted by Fresno County, proof of payment or payment of this fee will be required for issuance of building permits.

57) REGIONAL TRANSPORTATION MITIGATION FEE (RTMF) -- Pay the RTMF fee to the Joint Powers Agency located at 2035 Tulare Street, Suite 201, Fresno, CA 93721; (559) 233-4148, ext. 200; www.fresnocog.org. The RTMF form shall be signed by a Building and Safety Services staff member prior to issuance of building permits. Proof of payment shall be provided prior to issuance of occupancy.

58) SCHOOL FEES -- School fees must be paid, if required, prior to the issuance of building permits. Contact the applicable school district to obtain fee amount. Provide proof of payment (or no fee required) prior to the issuance of building permits.

59) FRESNO METROPOLITAN FLOOD CONTROL DISTRICT (FMFCD) FEES

a) A FMFCD Development Fee is required for review of proposed development projects, including applications for plan amendments, rezones, special permits, subdivisions, and grading plans. This fee is based on project acreage and must be paid directly to FMFCD in order for that agency to review projects and provide a Notice of Requirements. For more information, contact the FMFCD at (559) 456-3292.

b) FMFCD drainage fees are due, if required, prior to issuance of building permits and are payable at the rate in place at the time of building permit issuance. Unpaid drainage fee obligations that were unpaid for a prior project at the site of a new project must be satisfied by the developer of the new project. Drainage fees may be paid at the Planning and Development Department prior to, or at the time of building permit issuance. They may also be paid directly to FMFCD, and proof of payment provided to the City, in order to obtain construction permits.

60) SEWER CONNECTION CHARGES (FMC Section 6-304(a)). The following sewer connection charges may be required and will be payable at the fee rate listed in the Master Fee Schedule at the time payment is due. New sewer connection charges adopted by the Council prior to the issuance of building permits may also be applied.

a) Lateral Sewer Charge (based on property frontage to a depth of 100')

b) Oversize Sewer Charge (based on property frontage to a depth of 100')

c) Wastewater Facilities Charge

d) Trunk Sewer Charge

Effective January 9, 1999, Ordinance No. 98-97 also amended certain sewer connection charges. Fresno Municipal Code Article 15, Section 12 provides property owners the incentives and deletes certain sewer connection charges pursuant to the Simple Tiered Equity Program (STEP) and the Employment Development Program (EDP). For additional information on the STEP and EDP, contact the Department of Public Utilities, Wastewater Division - Environmental Services Section at (559) 621-5153.

61) WATER CONNECTION CHARGES: (FMC Sections 6-501 to 6-507). The following water connection charges may be required and will be payable at the fee rate listed in the Master Fee Schedule at the time payment is due. New water connection charges adopted by the Council prior to issuance of building permits may also be applied.

a) Frontage Charge (based on property frontage)

b) Service Charges (based on service size required by applicant)

c) Meter Charges (based on service need)

d) Water Capacity fee (based on size of meter)

City of Fresno General Notes (cont'd)

62. Deferment of the payment of Citywide development impact fees for Fire, Police, Parks, Streets, and Traffic Signals is available for projects located within the Downtown Priority Areas in accordance with the provisions of City of Fresno Resolutions Nos. 2009-265 and 2010-19.

PUBLIC WORKS DEPARTMENT GENERAL NOTES

63) Any survey monuments within the area of construction shall be preserved or reset by a person licensed to practice land surveying in the State of California.

64) Repair all damaged and/or off-grade concrete street improvements as determined by the Construction Management Engineer, prior to occupancy.

65) Two working days before commencing excavation operations within the street right-ofway and/or utility easements, all existing under-ground facilities shall have been located by underground services.

66) The performance of any work within the public street right-of-way requires a street work permit prior to commencement of work. All required street improvements must be completed and accepted by the City prior to occupancy.

67) Contact the Public Works Department, Traffic Engineering at (559) 621-8800, 10 working days prior to any offsite concrete construction.

68) For Standard Drawings visit https://www.fresno.gov/publicworks/wpcontent/uploads/sites/17/2016/09/CityofFresnoStandardDrawings2016Feb.pdf

69) For Traffic Planning's website with useful links, additional notes, sample of legend, Parking Manual and Traffic Study Checklist visit https://www.fresno.gov/publicworks/traffic-engineering/#tab-2

70) Traffic Planning Checklist link: https://www.fresno.gov/publicworks/wpcontent/uploads/sites/17/2019/04/Traffic-Planning-Checklist-04-19.pdf

71) For Traffic Study questions please contact Jill Gormley at (559) 621-8792 or via email at Jill.Gormley@fresno.gov.

Parking Summary

Parking [per FMC 15-2409]

See Proposed Site Plan on A3 for locations

Use		Required	Provided
Residential	Residents	6 stalls	12 stalls
	Guests	4 stalls	4 stalls
Commercial		0 stalls [see FMC 15-2412-A]	6 stalls (1 per 200 sf)

ADA Parking [per CBC Table 11B-208.2]

See Site Plan on A3 for locations.

For calculating required number of accessible stalls, electric vehicle charging stalls do not count. [11B-208.1]

For 1-25 standard stalls, 1 accessible stall required. [Table 11B-208.2]

For residential facilities, where at least one stall is provided per unit, at least one accessible stall shall be provided for each dwelling unit required to provide mobility features. Where less than one stall is provided per unit, comply with Table 208.2.

12 stalls provided, 2 of which is designated as current or future EV charging = 10 standard stalls provided.

One in every six accessible stalls, but not less than one shall be van accessible. [11B-208.2.4]

Use	Required	Provided
Residential	1 stall	1 stall
Commercial	1 stall	1 stall

Electric Vehicle Charging Spaces [per CalGreen 4.106.4.2]

See Site Plan on A3 for locations.

10% of total number of parking spaces shall be future EV charging.

Use	Required	Provided
Residential	1.2 stalls	2 stalls
Commercial	1 stall	1 stall

Bicycle Parking [per FMC Table 15-2429-D and CalGreen 5.106.4.1]

See Site Plan on A3 for locations

Residential Uses:

Required	Provided
Short term stalls not required if less than 15 dwelling units provided	0 stalls provided, OK
Long term stalls not required if less than 15 dwelling units provided	0 stalls provided, OK

Commercial Uses:

Required	Provided
Provide 5% of total new parking spaces as short term bicycle parking, or (1) 2-capacity rack min.	2 stalls provided, OK
Long term stalls not required if less than 10 tenant-occupants, (+/- 4 employees proposed)	0 stalls provided, OK

PAUL HALAJIAN
ARCHITECTS
389 Clovis Ave, Suite 100
Clovis, CA 93612-1185
T: 559.297.7900 F: 559.297.7950
www.halajianarch.com

LICENSED ARCHITECT
NOT FOR CONSTRUCTION
STATE OF CALIFORNIA

PAUL HALAJIAN ARCHITECTS expressly reserves its common law copyright and other property rights specifically related to the contents of these plans. This document and the ideas and designs incorporated herein, as an instrument of professional service rendered by PAUL HALAJIAN ARCHITECTS, is not to be used in whole or in part for any other project without prior written authorization from PAUL HALAJIAN ARCHITECTS.

PROJECT:
Reza Assemi
Site Development
6545 North Palm Avenue, Fresno, CA 93704

SHEET: General Notes

DRAWING SET INFORMATION:

12.02.2021	DP Submittal

REVISIONS:

PROJECT NUMBER:
2017-34

SHEET NUMBER:
A1

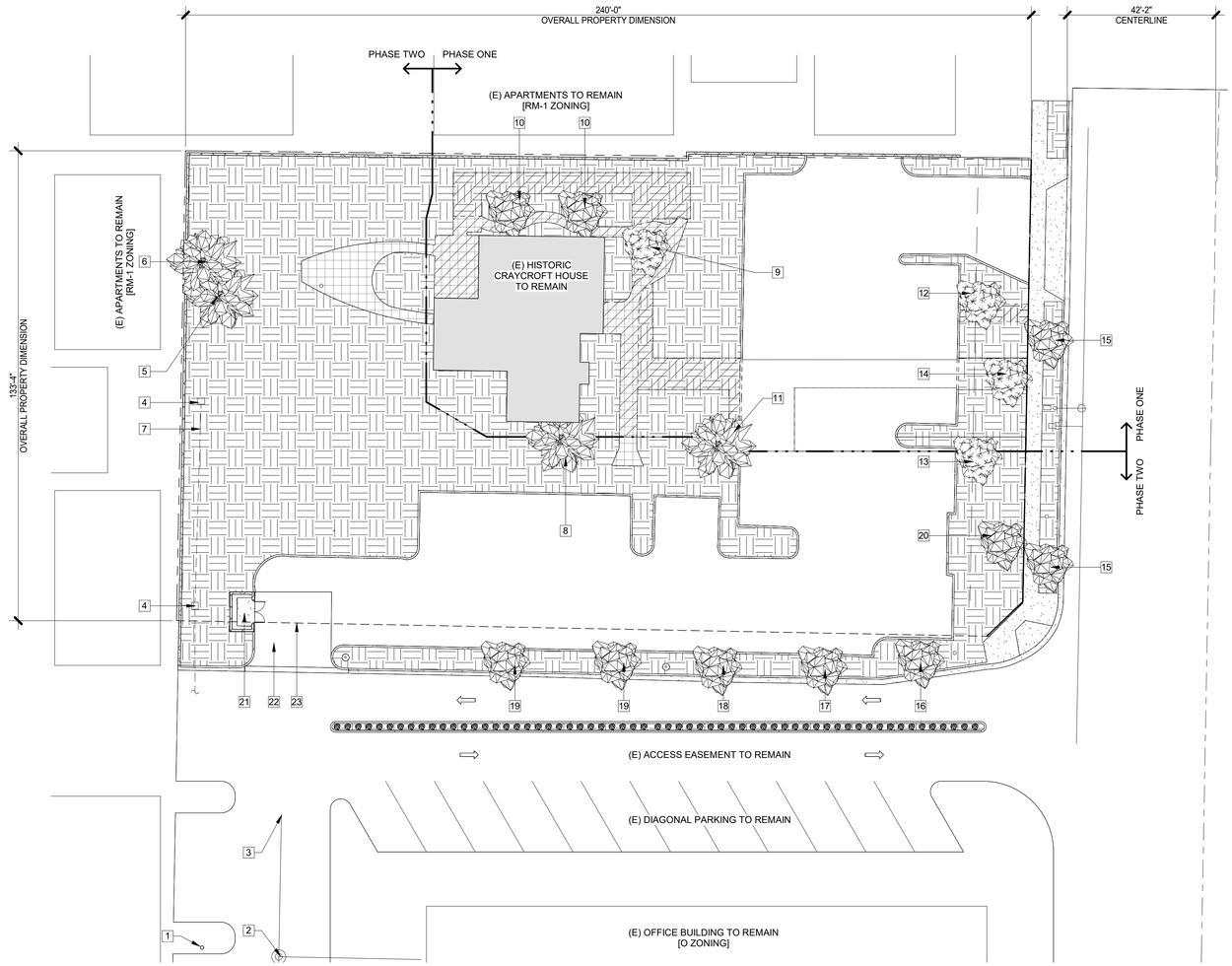

1 Demo Site Plan
1" = 20'-0"

General Notes

1) Keynotes apply to this sheet only.

2) Items shown but not noted are to be considered existing to remain, typ. u.n.o.

3) Field verify all (E) conditions prior to commencing demolition work.

4) Protect all (E) underground utilities, unless noted as a part of the scope of work.

5) Two (2) working days before commencing excavation operations within the street right-of-way and/or utility easements, all existing underground facilities shall be located by Underground Services Alert (USA). Call (800) 642-2444.

Keynotes

1 (E) private fire hydrant 140' south in commercial parking lot
2 (E) manhole to remain
3 (E) sewer line to remain, assumed to feed subject property.
4 (E) drain inlet to remain, see forthcoming Civil drawings for proposed grading plan
5 Remove (E) 26" palm tree, salvage for Owner.
6 Remove (E) 24" palm tree, salvage for Owner.
7 Thin dashed line indicates assumed storm drain line underground, V.I.F.
8 Remove (E) 18" palm tree, salvage for Owner.
9 Remove (E) 6" laurel tree
10 (E) 11" orange tree to remain
11 (E) 42" palm tree to remain
12 Remove (E) 25" poplar tree
13 Remove (E) 18" poplar tree
14 (E) 18" poplar tree to remain
15 (E) 8" gingko bilboa tree to remain
16 (E) 19" poplar tree to remain
17 (E) 12" poplar tree to remain
18 (E) 14" poplar tree to remain
19 (E) 13" poplar tree to remain
20 (E) 16" poplar tree to remain
21 (E) CMU block trash enclosure to remain
22 (E) asphalt drive aisle to remain to provide access to (E) trash enclosure
23 (E) property line to be adjusted through LLA (lot line adjustment), in progress. See proposed plan for new location.

APPL. NO. P21-05568 EXHIBIT A-2 DATE 03/23/2022
PLANNING REVIEW BY _____ DATE _____
TRAFFIC ENG. _____ DATE _____
APPROVED BY _____ DATE _____
CITY OF FRESNO DARM DEPT

PAUL HALAJIAN
ARCHITECTS
389 Clovis Ave, Suite 100
Clovis, CA 93612-1185
T: 559.297.7900 F: 559.297.7950
www.halajianarch.com

LICENSED ARCHITECT
NOT FOR CONSTRUCTION
STATE OF CALIFORNIA

PAUL HALAJIAN ARCHITECTS expressly reserves its common law copyright and other property rights specifically related to the contents of these plans. This document and the ideas and designs incorporated herein, as an instrument of professional service rendered by PAUL HALAJIAN ARCHITECTS, is not to be used in whole or in part for any other project without prior written authorization from PAUL HALAJIAN ARCHITECTS.

PROJECT:
Reza Assemi Site Development
6545 North Palm Avenue, Fresno, CA 93704

SHEET: Demo Site Plan

DRAWING SET INFORMATION:

12.02.2021	DP Submittal

REVISIONS:

PROJECT NUMBER:
2017-34

SHEET NUMBER:
A2

Vicinity Map

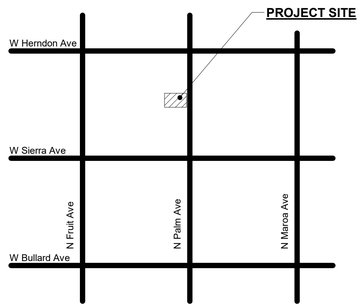

Project Information

OWNER/BUILDER:
Reza Assemi

559-260-6006

rezaassemi@hotmail.com

ARCHITECT:
Paul Halajian Architects
389 Clovis Avenue, Suite 100
Clovis, CA 93612

Contact: Stephanie Say
559-297-7900

stephanies@halajianarch.com

Project Description

Project includes phased site development for the rehabilitation of a historic building and addition of new construction apartment units.

Phase one includes rehabilitation of the historic Craycroft home and immediate site improvements to include upgraded path of travel, new parking, and trash enclosure. The occupancy will be changed from assumed R-3 to B, to facilitate a future tenant improvement for a restaurant/speakeasy within the historic house. Structural upgrades will be included as required.

Phase two includes full buildout of the site, including the addition of (6) new apartment units, additional parking stalls, and fenced courtyard area.

Site Information

APN: 407-762-12

General Plan Designation O - Office

Zoning Designation O - Office

	Existing	Proposed
Project Site Area (Net)	30,226 sf (0.69 acres)	33,082 sf (0.76 acres)
Project Site Area (Gross)	32,207 sf (0.74 acres)	35,079 sf (0.81 acres)
Existing Building Area	1,864 sf footprint	1,864 sf footprint
Proposed Building Area	-	6,233 sf footprint
Building Coverage	6%	23%
Paved Area	12,755 sf	14,719 sf
Landscaped Area	16,167 sf	12,263 sf

(LLA in progress)

Provide legal description to reflect Lot Line Adjustment No. 2022-03

Comply with Section 15-2419 for parking lot surface standards

APPL. NO. P21-05568 EXHIBIT A-3 DATE 03/23/2022

PLANNING REVIEW BY _____ DATE _____

TRAFFIC ENG. _____ DATE _____

APPROVED BY _____ DATE _____

CITY OF FRESNO DARM DEPT

General Notes

1) Keynotes apply to this sheet only.

2) Items shown but not noted are to be considered existing to remain, typ. u.n.o.

3) All proposed exterior lighting shall be shielded to reduce or eliminate light pollution in compliance with applicable codes.

4) Pedestrian path of travel must meet current ADA requirements.

5) Any survey monuments within the area of construction shall be preserved or reset surveying in the State of California.

6) All improvements shall be constructed in accordance with the City of Fresno Standard Drawings and Specifications.

Keynotes

1 New trash enclosure, shared by commercial and residential tenants, per City of Fresno Standards P-33A, B, C. See 15, 16, 17/A17.
2 Dashed line indicates 3' bumper overhang over continuous curb per City of Fresno Parking Manual, typ.
3 New parking stall striping per City of Fresno Parking Manual, typ.
4 Dashed lines indicate turning radius for trash and fire access, typ.
5 Colored/stamped concrete in hatched area, typ.
6 Dashed line indicates 15' parking setback from curb/property line
7 Pedestrian access to trash enclosure
8 (E) tree to remain, protect from damage during construction, typ.
9 New drought tolerant shrub, typ.
10 New privacy hedge in raised planter
11 15' landscape transition buffer, exception requested due to proposed residential use permitted per letter from Dan Zack
12 (E) 6' CMU block wall to remain, typ.
13 Pavers in residential courtyard area, typ.
14 8' steel no-climb fence for residential security, typ. See 11, 19/A17 and 1, 2/A18.
15 Pedestrian access to residential portion of site, 4' wide metal gate per FFD requirements, typ. See 11, 19/A17 and 1, 2/A18.
16 Future EV charging stall, typ.
17 ADA van-accessible parking stall and loading area with concrete finish. Use ISA per detail 1/A17, typ. See also 2/A17 for striping pattern.
18 New straight-type curb ramp, see 5/A17, typ.
19 Striped crosswalk for ADA accessible path of travel
20 Planted area at grade, typ.
21 (E) metal pole light with concrete base to remain
22 (E) 6" concrete curb and gutter to remain
23 (E) median to remain
24 (E) sidewalk to remain
25 (E) planted area to remain
26 (E) curb ramp to remain
27 Sculpture by Owner
28 Connection to (E) bus stop along Palm Avenue, see 8/A17
29 Phase line, typ.
30 (E) property line to remain, typ.
31 (E) driveway to remain
32 Painted directional arrow, typ. See 12/A17.
33 New transformer, clearances and bollards as required by PG&E, see 13/A17.
34 Asphalt finish in residential parking area, per City of Fresno Standards P-41, 42 and 43, typ.
35 Truncated domes at bottom of ramp, typ. See 14/A17.
36 Freestanding mailbox unit
37 New ribbon-style bicycle rack with (2) bicycle capacity, min. See 18/A17.
38 Paint curb with "FIRE LANE NO PARKING"
39 Grey area of curb painted red "BUS ZONE" to remain
40 (E) pole-mounted bus stop signage to remain
41 (E) metal streetlight to remain
42 (E) wood power pole to remain
43 (E) public fire hydrant 75' north along Palm Ave.
44 (E) private fire hydrant 140' south in commercial parking lot
45 New 8' metal no-climb fence around residential parking area
46 New motorized sliding gate for vehicular access to residential parking area
47 New 6' wood fence for private yard, typ.
48 (E) manhole to remain
49 (E) sewer line to remain, assumed to feed subject property.
50 (E) 12" water line in Palm Avenue to remain
51 (E) water meter in underground box with 1" water service to remain
52 Area for backflow preventers and FDC/PIV
53 ADA parking sign, pole-mounted, see 3/A17
54 ADA parking sign, fence-mounted, sim to 3/A17
55 Entrance sign; see 4/A17
56 New concrete sidewalk, see 7/A17, typ.
57 Thick dashed line indicates 4' path of travel along (E) sidewalk
58 Pole light site fixture, shielded downward per CEC and FMC requirements, typ.
59 (E) CMU block trash enclosure to remain
60 (E) asphalt drive aisle to remain to provide access to (E) trash enclosure, this portion of site to remain on southern neighbor's property.
61 New location of property line to exclude (E) pole light fixtures from project area, to remain on southern neighbor's property, typ. of (2)
62 Property line to be adjusted to outside face of curb through LLA (lot line adjustment), in progress
63 Site furnishings by Owner, typ.

6' wrought iron fence max height

6' wrought iron fence max height

Revise all property lines to reflect Lot Line Adjustment Application No. L22-0005

Comply with section 15-2018, vegetation and structures may not exceed a height of three feet within the triangular sight-distance area formed by the intersecting curb lines (or edge of pavement when no curbs exist) and a line joining points on these curb lines at the locations and distances

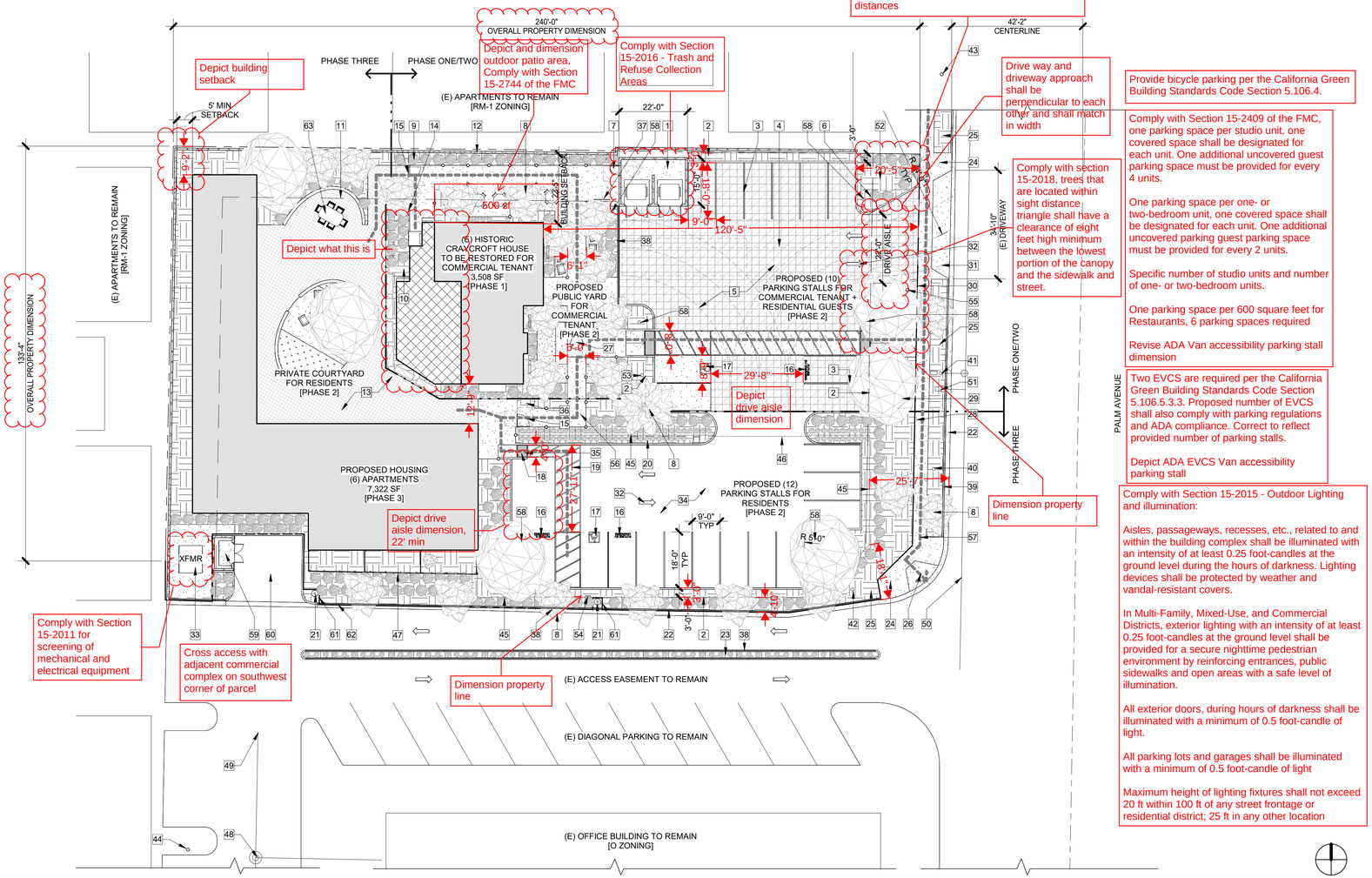

1 Site Plan
1" = 20'-0"

Legend

- Property Line
- Path of travel, 4' min. width
- Phase Line
- Centerline
- Dirt/planter
- Building
- Concrete finish
- Asphalt finish
- Truncated domes
- Paver finish
- Raised porch
- Colored concrete

PAUL HALAJIAN
ARCHITECTS
389 Clovis Ave, Suite 100
Clovis, CA 93612-1185
T: 559.297.7900 F: 559.297.7950
www.halajianarch.com

LICENSED ARCHITECT — NOT FOR CONSTRUCTION — STATE OF CALIFORNIA

PAUL HALAJIAN ARCHITECTS expressly reserves its common law copyright and other property rights specifically related to the contents of these plans. This document and the ideas and designs incorporated herein, as an instrument of professional service rendered by PAUL HALAJIAN ARCHITECTS, is not to be used in whole or in part for any other project without prior written authorization from PAUL HALAJIAN ARCHITECTS.

PROJECT:
Reza Assemi Site Development
6545 North Palm Avenue, Fresno, CA 93704

SHEET: Proposed Site Plan

DRAWING SET INFORMATION:

12.02.2021	DP Submittal

REVISIONS:

PROJECT NUMBER:
2017-34

SHEET NUMBER:
A3

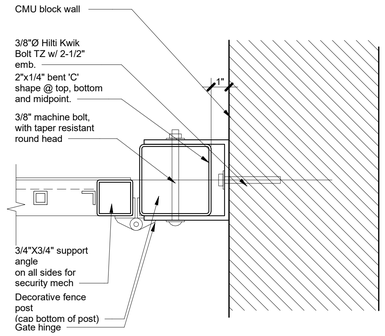

19 Ornamental Gate Hinge
3" = 1'-0"

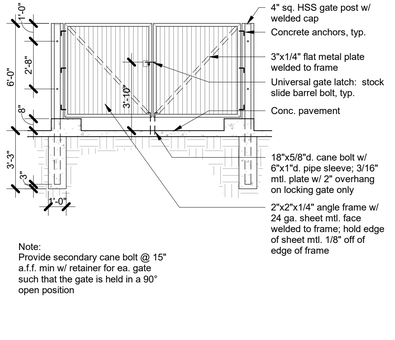

Note:
Provide secondary cane bolt @ 15" a.f.f. min w/ retainer for ea. gate such that the gate is held in a 90° open position

15 Trash Enclosure - Gate
1/4" = 1'-0"

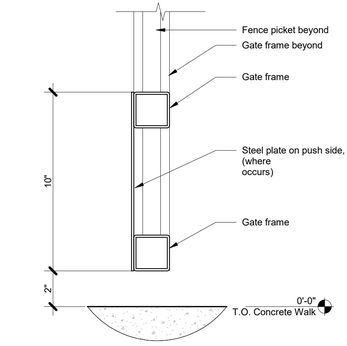

11 Ornamental Gate Kick Plate
3" = 1'-0"

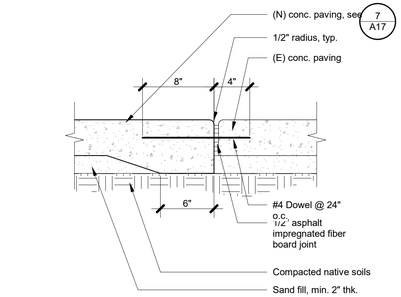

8 Concrete Walk at Existing Walk
1 1/2" = 1'-0"

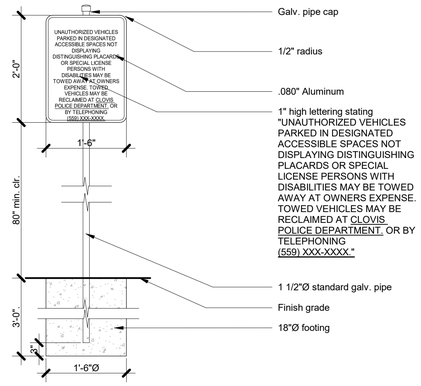

4 Entrance Sign
3/4" = 1'-0"

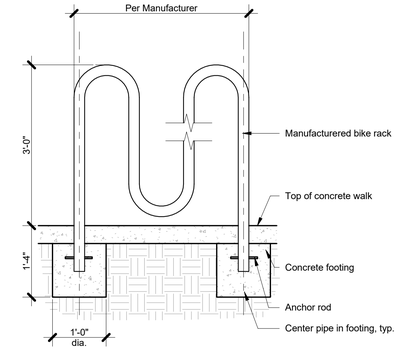

18 Bike Rack
3/4" = 1'-0"

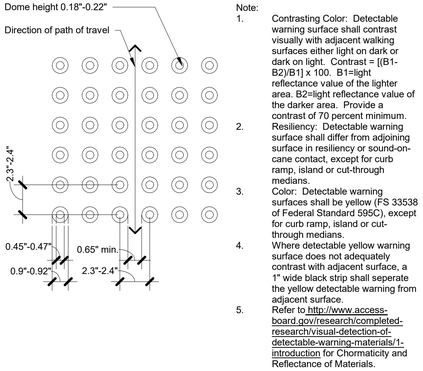

Note:
1. Contrasting Color: Detectable warning surface shall contrast visually with adjacent walking surfaces either light on dark or dark on light. Contrast = [(B1-B2)/B1] x 100. B1=light reflectance value of the lighter area. B2=light reflectance value of the darker area. Provide a contrast of 70 percent minimum.
2. Resiliency: Detectable warning surface shall differ from adjoining surface in resiliency or sound-on-cane contact, except for curb ramp, island or cut-through medians.
3. Color: Detectable warning surfaces shall be yellow (FS 33538 of Federal Standard 595C), except for curb ramp, island or cut-through medians.
4. Where detectable yellow warning surface does not adequately contrast with adjacent surface, a 1" wide black strip shall seperate the yellow detectable warning from adjacent surface.
5. Refer to http://www.access-board.gov/research/completed-research/visual-detection-of-detectable-warning-materials/1-introduction for Chormaticity and Reflectance of Materials.

14 Truncated Dome
3" = 1'-0"

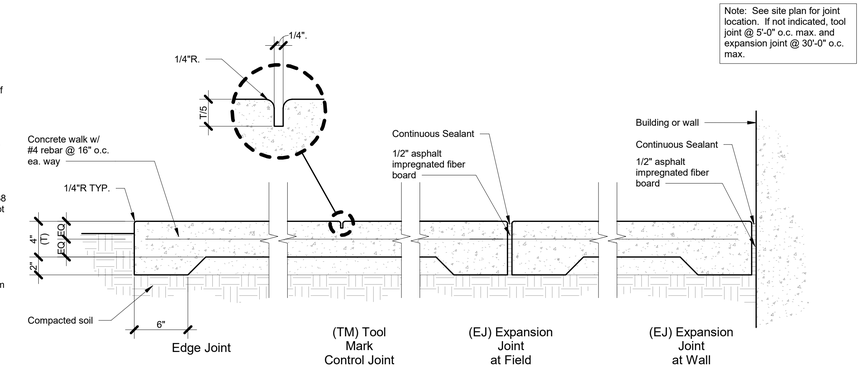

7 Concrete Walk
1 1/2" = 1'-0"

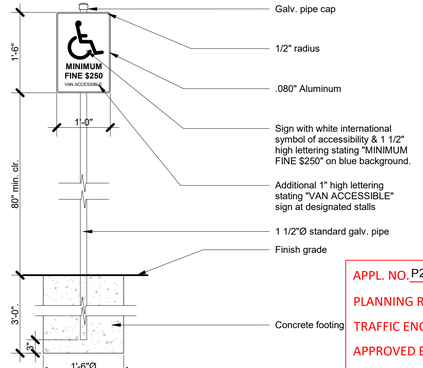

3 Accessible Parking Signs
3/4" = 1'-0"

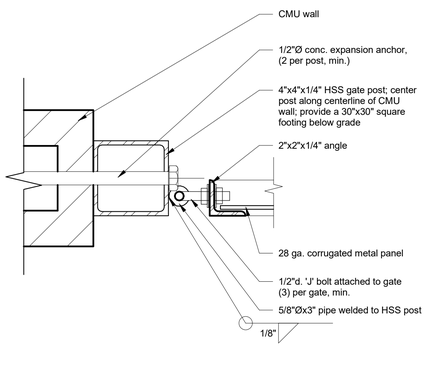

18 Bike Rack
3/4" = 1'-0"

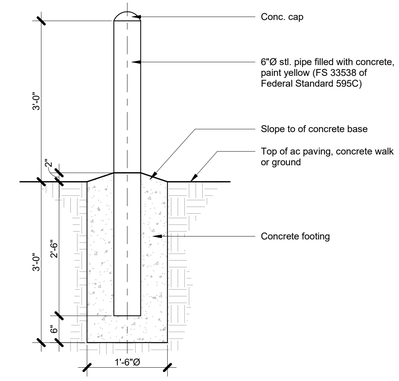

14 Truncated Dome
3" = 1'-0"

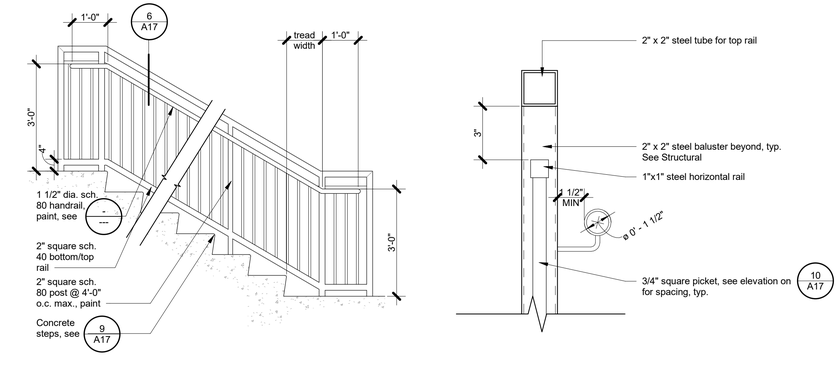

7 Concrete Walk
1 1/2" = 1'-0"

6 T.O. Typ Stair Guardrail
3" = 1'-0"

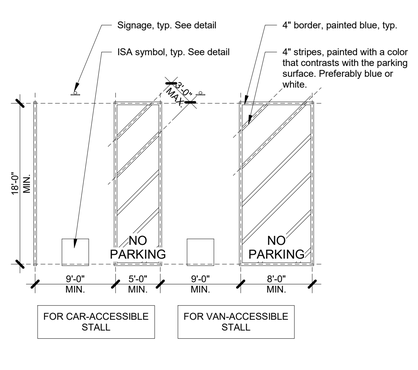

2 Typical ADA Striping
1/8" = 1'-0"

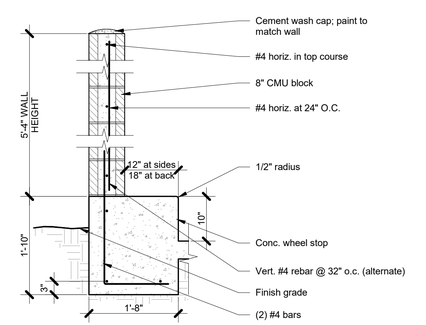

17 Trash Enclosure - Gate Detail
3" = 1'-0"

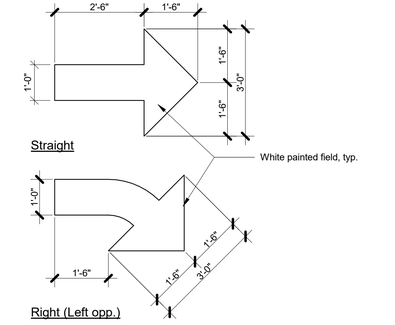

13 Pipe Bollard
3/4" = 1'-0"

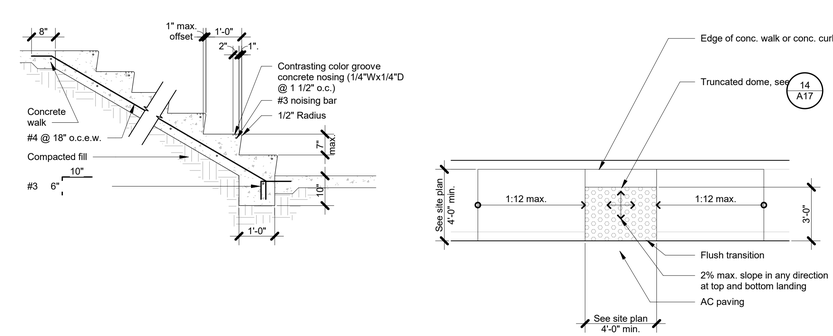

10 Handrail @ Stairs
1/2" = 1'-0"

5 Concrete Curb Ramp - Parallel Type
1/4" = 1'-0"

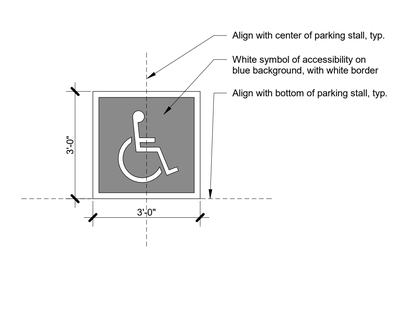

1 Typical ADA Parking Symbol
1/2" = 1'-0"

PAUL HALAJIAN
ARCHITECTS
389 Clovis Ave, Suite 100
Clovis, CA 93612-1185
T: 559.297.7900 F: 559.297.7950
www.halajianarch.com

LICENSED ARCHITECT — NOT FOR CONSTRUCTION — STATE OF CALIFORNIA

PAUL HALAJIAN ARCHITECTS expressly reserves its common law copyright and other property rights specifically related to the contents of these plans. This document and the ideas and designs incorporated herein, as an instrument of professional service rendered by PAUL HALAJIAN ARCHITECTS, is not to be used in whole or in part for any other project without prior written authorization from PAUL HALAJIAN ARCHITECTS.

APPL. NO. P21-05568 EXHIBIT A-4 DATE 03/23/2022
PLANNING REVIEW BY _____ DATE _____
TRAFFIC ENG. _____ DATE _____
APPROVED BY _____ DATE _____
CITY OF FRESNO DARM DEPT

PROJECT:
Reza Assemi Site Development
6545 North Palm Avenue, Fresno, CA 93704

SHEET: Site Details

DRAWING SET INFORMATION:

12.02.2021	DP Submittal

REVISIONS:

PROJECT NUMBER:
2017-34

SHEET NUMBER:
A17

APPL. NO. P21-05568 EXHIBIT A-5 DATE 03/23/2022

PLANNING REVIEW BY _____ DATE _____

TRAFFIC ENG. _____ DATE _____

APPROVED BY _____ DATE _____

CITY OF FRESNO DARM DEPT

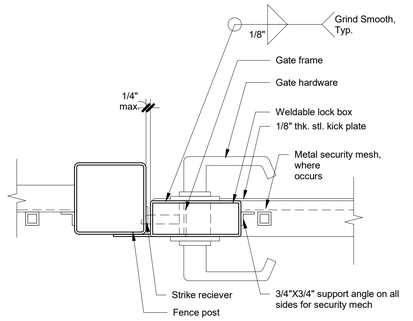

Note:
1. See finish hardware spec. for additional info.

2 Ornamental Gate Hardware
3" = 1'-0"

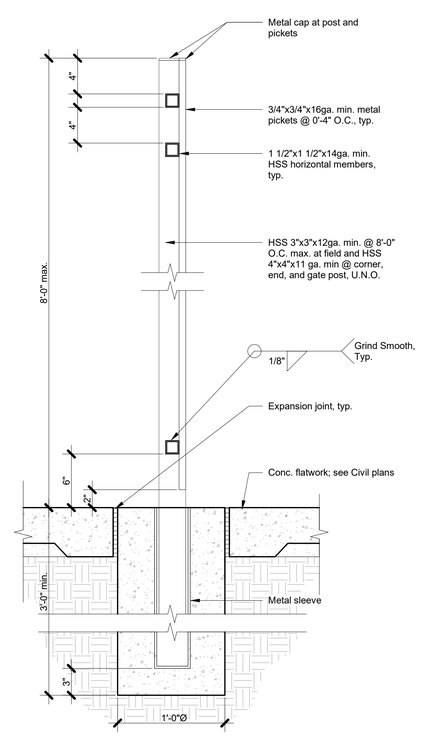

1 Ornamental Fence
1 1/2" = 1'-0"

PAUL HALAJIAN
ARCHITECTS
389 Clovis Ave, Suite 100
Clovis, CA 93612-1185
T: 559.297.7900 F: 559.297.7950
www.halajianarch.com

LICENSED ARCHITECT
NOT FOR CONSTRUCTION
STATE OF CALIFORNIA

PAUL HALAJIAN ARCHITECTS expressly reserves its common law copyright and other property rights specifically related to the contents of these plans. This document and the ideas and designs incorporated herein, as an instrument of professional service rendered by PAUL HALAJIAN ARCHITECTS, is not to be used in whole or in part for any other project without prior written authorization from PAUL HALAJIAN ARCHITECTS.

PROJECT:
Reza Assemi Site Development
6545 North Palm Avenue, Fresno, CA 93704

SHEET: Site Details

DRAWING SET INFORMATION:

12.02.2021	DP Submittal

REVISIONS:

PROJECT NUMBER:
2017-34

SHEET NUMBER:
A18

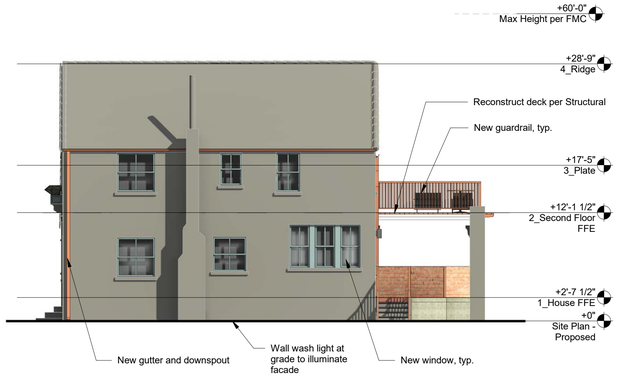

8 North - Proposed
1/8" = 1'-0"

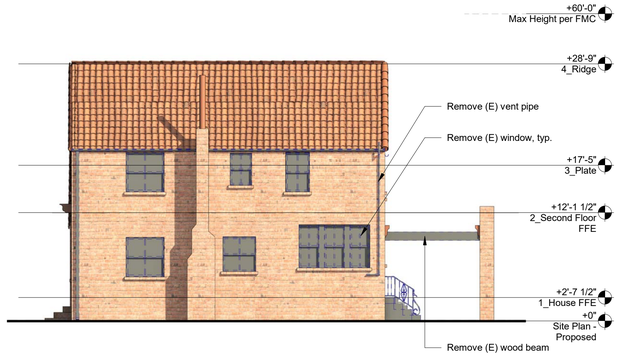

7 North - Existing
1/8" = 1'-0"

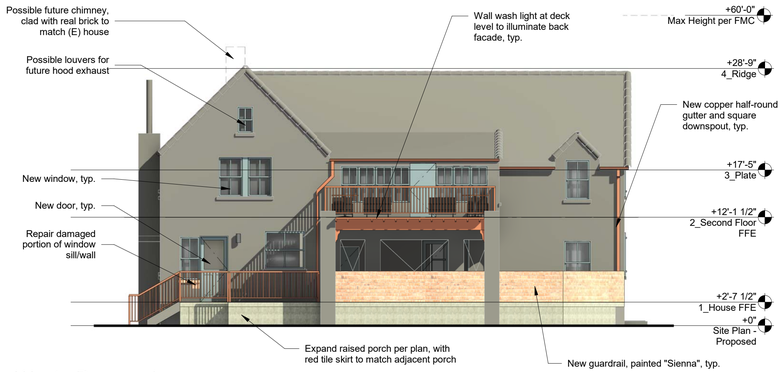

6 West - Proposed
1/8" = 1'-0"



5 West - Existing
1/8" = 1'-0"



4 South - Proposed
1/8" = 1'-0"



3 South - Existing
1/8" = 1'-0"

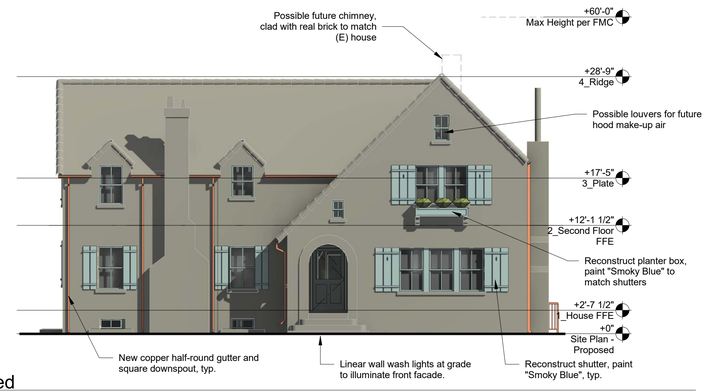

2 East - Proposed
1/8" = 1'-0"



1 East - Existing
1/8" = 1'-0"

General Notes

1) Keynotes apply to this sheet only.

2) For more information on windows and doors, see Schedules on A701-704.

3) Height maximum per Fresno Municipal Code is 60'. Existing building to remain, no changes at this time.

Comply with Section 15-1305 for facade design development standards

APPL. NO. P21-05568 EXHIBIT E-1 DATE 03/23/2022

PLANNING REVIEW BY _____ DATE _____

TRAFFIC ENG. _____ DATE _____

APPROVED BY _____ DATE _____

CITY OF FRESNO DARM DEPT

PAUL HALAJIAN
ARCHITECTS
389 Clovis Ave, Suite 100
Clovis, CA 93612-1185
T: 559.297.7900 F: 559.297.7950
www.halajianarch.com

LICENSED ARCHITECT — NOT FOR CONSTRUCTION — STATE OF CALIFORNIA

PAUL HALAJIAN ARCHITECTS expressly reserves its common law copyright and other property rights specifically related to the contents of these plans. This document and the ideas and designs incorporated herein, as an instrument of professional service rendered by PAUL HALAJIAN ARCHITECTS, is not to be used in whole or in part for any other project without prior written authorization from PAUL HALAJIAN ARCHITECTS.

PROJECT:
Reza Assemi
Craycroft Change of Occupancy
6545 North Palm Ave, Fresno, CA 93704

SHEET: Exterior Elevations

DRAWING SET INFORMATION:

10.15.2021	DP Submittal

REVISIONS:

PROJECT NUMBER:
2017-34

SHEET NUMBER:
A11

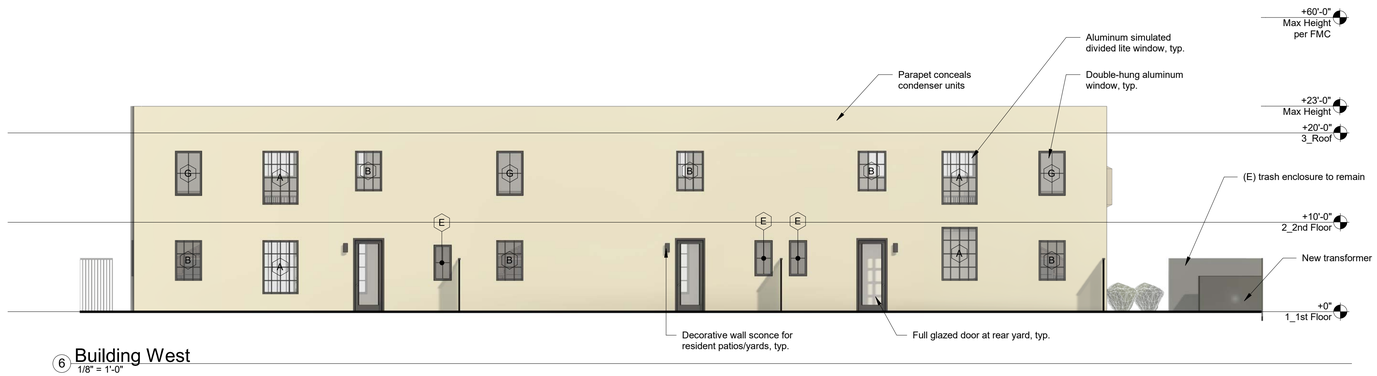

6 Building West
1/8" = 1'-0"

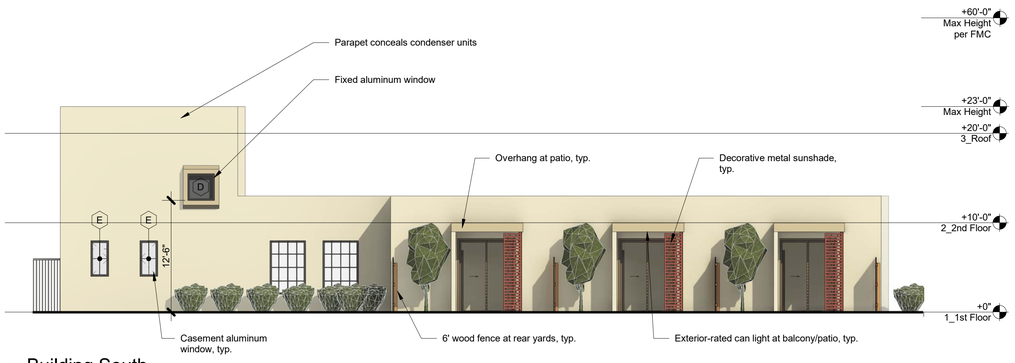

5 Building South
1/8" = 1'-0"

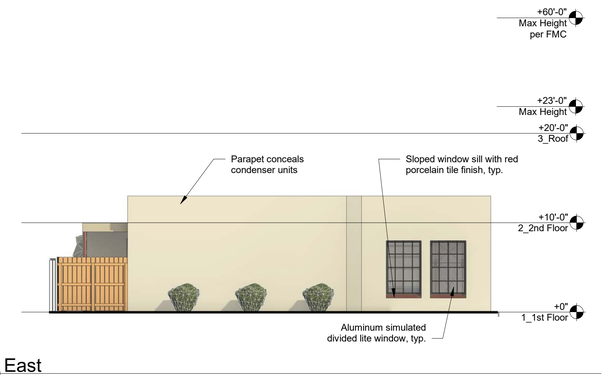

4 East
1/8" = 1'-0"

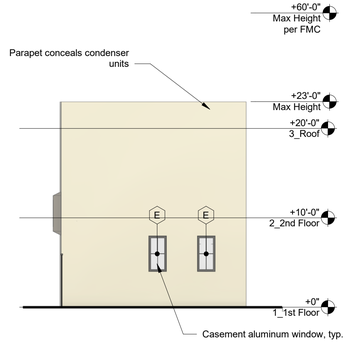

3 Building North
1/8" = 1'-0"

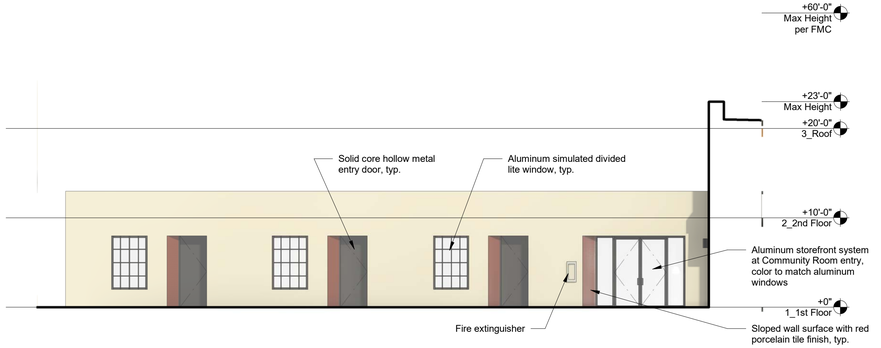

2 Courtyard South
1/8" = 1'-0"

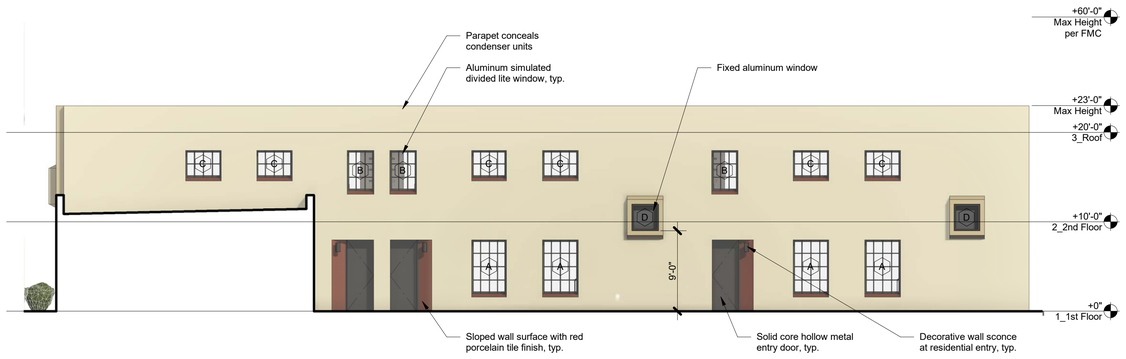

1 Courtyard West
1/8" = 1'-0"

General Notes

1) Keynotes apply to this sheet only.

2) For more information on windows and doors, see tags on floor plans and schedules, typ.

3) Site elevation shown here is approximate and for reference only. Refer to civil package for final grades.

4) Landscaping shown here is approximate and for coordination purposes only, refer to Landscape drawings for more information.

5) See Finish Schedule on A7xx for material abbreviations and more information.

APPL. NO. P21-05568 EXHIBIT E-2 DATE 03/23/2022
PLANNING REVIEW BY _____ DATE _____
TRAFFIC ENG. _____ DATE _____
APPROVED BY _____ DATE _____
CITY OF FRESNO DARM DEPT

PAUL HALAJIAN
ARCHITECTS
389 Clovis Ave, Suite 100
Clovis, CA 93612-1185
T: 559.297.7900 F: 559.297.7950
www.halajianarch.com

LICENSED ARCHITECT
NOT FOR CONSTRUCTION
STATE OF CALIFORNIA

PAUL HALAJIAN ARCHITECTS expressly reserves its common law copyright and other property rights specifically related to the contents of these plans. This document and the ideas and designs incorporated herein, as an instrument of professional service rendered by PAUL HALAJIAN ARCHITECTS, is not to be used in whole or in part for any other project without prior written authorization from PAUL HALAJIAN ARCHITECTS.

PROJECT:
Reza Assemi
Craycroft Housing
6545 North Palm Avenue, Fresno, CA 93704

SHEET: Exterior Elevations

DRAWING SET INFORMATION:

12.02.2021	DP Submittal

REVISIONS:

PROJECT NUMBER:
2017-34

SHEET NUMBER:
A16

General Notes

1) Keynotes apply to this sheet only.

2) Dimensions with "MIN" "CLR" "MIN CLR" or "ABSOLUTE" are measured from face of wall finish.

3) For typical reach ranges, see detail

4) For door clearances, see detail

5) Room numbering shown here is not to be used for room signage. Confirm with Owner prior to fabrication and installation.

6) For fixture and toilet accessories mounting and location, see Interior Elevations and

7) For Finish, Door and Window information, see A701.

8) Provide backing as needed for all CFCI/OFCI items, including but not limited to: projectors, projector screens, tackboard and dry erase boards. See detail

9) Doors into wheelchair accessible water closet stalls shall be self-closing, typ. u.n.o.

10) All new partition walls shall be continuous to underside of roof deck, typ. u.n.o.

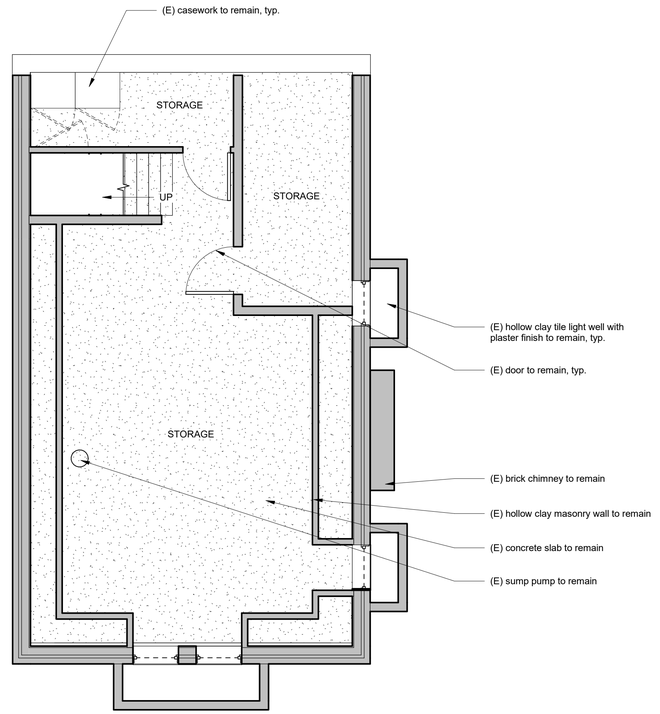

1 Basement Floor Plan - Existing
1/4" = 1'-0"

APPL. NO. P21-05568 EXHIBIT F-1 DATE 03/23/2022

PLANNING REVIEW BY _____ DATE _____

TRAFFIC ENG. _____ DATE _____

APPROVED BY _____ DATE _____

CITY OF FRESNO DARM DEPT

PAUL HALAJIAN
ARCHITECTS
389 Clovis Ave, Suite 100
Clovis, CA 93612-1185
T: 559.297.7900 F: 559.297.7950
www.halajianarch.com

LICENSED ARCHITECT
NOT FOR CONSTRUCTION
STATE OF CALIFORNIA

PAUL HALAJIAN ARCHITECTS expressly reserves its common law copyright and other property rights specifically related to the contents of these plans. This document and the ideas and designs incorporated herein, as an instrument of professional service rendered by PAUL HALAJIAN ARCHITECTS, is not to be used in whole or in part for any other project without prior written authorization from PAUL HALAJIAN ARCHITECTS.

PROJECT:
Reza Assemi
Craycroft Change of Occupancy
6545 North Palm Ave, Fresno, CA 93704

SHEET: Basement Floor Plan - Existing

DRAWING SET INFORMATION:

10.15.2021	DP Submittal

REVISIONS:

PROJECT NUMBER:
2017-34

SHEET NUMBER:
A5

General Notes

1) Keynotes apply to this sheet only.

2) Dimensions with "MIN" "CLR" "MIN CLR" or "ABSOLUTE" are measured from face of wall finish.

3) For typical reach ranges, see detail

4) For door clearances, see detail

5) Room numbering shown here is not to be used for room signage. Confirm with Owner prior to fabrication and installation.

6) For fixture and toilet accessories mounting and location, see Interior Elevations and

7) For Finish, Door and Window information, see A701.

8) Provide backing as needed for all CFCI/OFCI items, including but not limited to: projectors, projector screens, tackboard and dry erase boards. See detail

9) Doors into wheelchair accessible water closet stalls shall be self-closing, typ. u.n.o.

10) All new partition walls shall be continuous to underside of roof deck, typ. u.n.o.

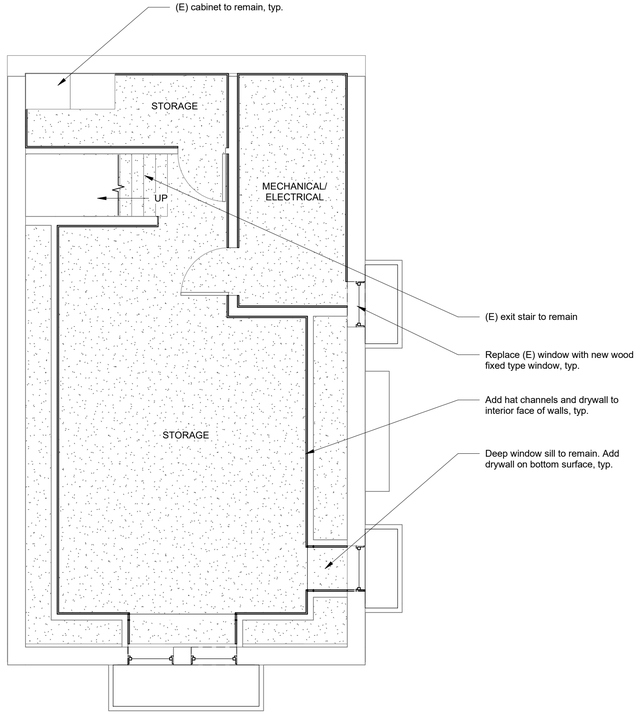

1 Basement Floor Plan - Proposed
1/4" = 1'-0"

APPL. NO. P21-05568 EXHIBIT F-2 DATE 03/23/2022
PLANNING REVIEW BY _____ DATE _____
TRAFFIC ENG. _____ DATE _____
APPROVED BY _____ DATE _____
CITY OF FRESNO DARM DEPT

PH
PAUL HALAJIAN
ARCHITECTS
389 Clovis Ave, Suite 100
Clovis, CA 93612-1185
T: 559.297.7900 F: 559.297.7950
www.halajianarch.com

LICENSED ARCHITECT
NOT FOR CONSTRUCTION
STATE OF CALIFORNIA

PAUL HALAJIAN ARCHITECTS expressly reserves its common law copyright and other property rights specifically related to the contents of these plans. This document and the ideas and designs incorporated herein, as an instrument of professional service rendered by PAUL HALAJIAN ARCHITECTS, is not to be used in whole or in part for any other project without prior written authorization from PAUL HALAJIAN ARCHITECTS.

PROJECT:
Reza Assemi
Craycroft Change of Occupancy
6545 North Palm Ave, Fresno, CA 93704

SHEET: Basement Floor Plan - Proposed

DRAWING SET INFORMATION:

10.15.2021	DP Submittal

REVISIONS:

PROJECT NUMBER:
2017-34

SHEET NUMBER:
A6

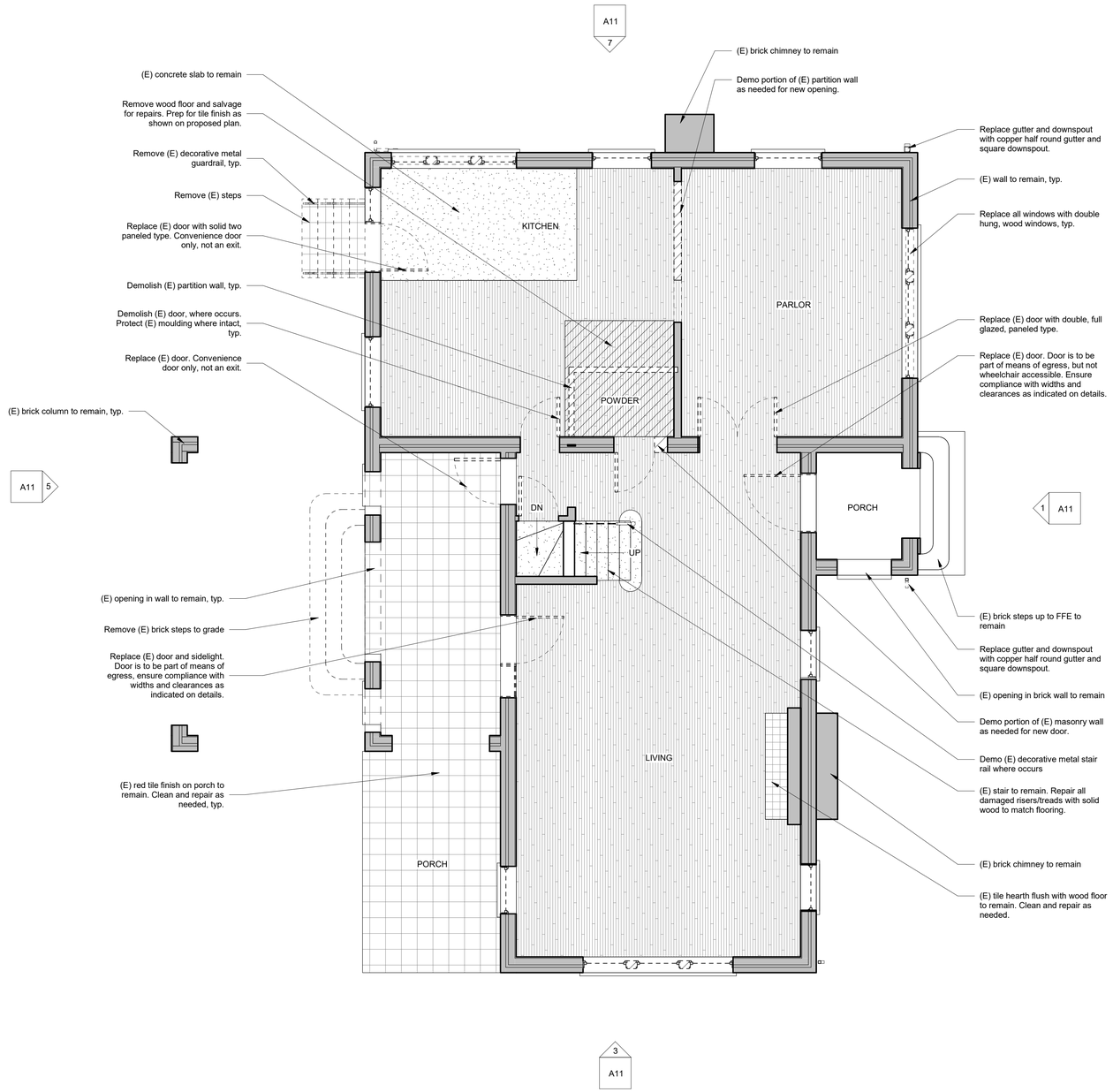

1 First Floor Plan - Existing
1/4" = 1'-0"

General Notes

1) Keynotes apply to this sheet only.

2) Dimensions with "MIN" "CLR" "MIN CLR" or "ABSOLUTE" are measured from face of wall finish.

3) For typical reach ranges, see detail

4) For door clearances, see detail

5) Room numbering shown here is not to be used for room signage. Confirm with Owner prior to fabrication and installation.

6) For fixture and toilet accessories mounting and location, see Interior Elevations and

7) For Finish, Door and Window information, see A701.

8) Provide backing as needed for all CFCI/OFCI items, including but not limited to: projectors, projector screens, tackboard and dry erase boards. See detail

9) Doors into wheelchair accessible water closet stalls shall be self-closing, typ. u.n.o.

10) All new partition walls shall be continuous to underside of roof deck, typ. u.n.o.

APPL. NO. P21-05568 EXHIBIT F-3 DATE 03/23/2022

PLANNING REVIEW BY _____ DATE _____

TRAFFIC ENG. _____ DATE _____

APPROVED BY _____ DATE _____

CITY OF FRESNO DARM DEPT

PH

PAUL HALAJIAN
ARCHITECTS
389 Clovis Ave, Suite 100
Clovis, CA 93612-1185
T: 559.297.7900 F: 559.297.7950
www.halajianarch.com

LICENSED ARCHITECT
NOT FOR CONSTRUCTION
STATE OF CALIFORNIA

PAUL HALAJIAN ARCHITECTS expressly reserves its common law copyright and other property rights specifically related to the contents of these plans. This document and the ideas and designs incorporated herein, as an instrument of professional service rendered by PAUL HALAJIAN ARCHITECTS, is not to be used in whole or in part for any other project without prior written authorization from PAUL HALAJIAN ARCHITECTS.

Occupancy

PROJECT:
Reza Assemi
Craycroft Change of Oc
6545 North Palm Ave, Fresno, CA 93704

SHEET: First Floor Plan - Existing

DRAWING SET INFORMATION:

10.15.2021	DP Submittal

REVISIONS:

PROJECT NUMBER:
2017-34

SHEET NUMBER:
A7

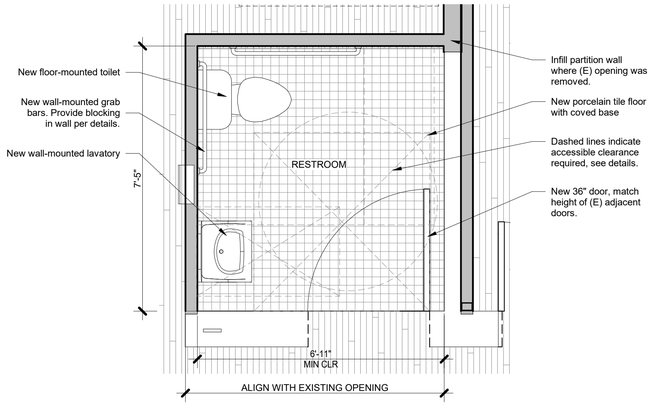

2 Enlarged Restroom Plan
1/2" = 1'-0"

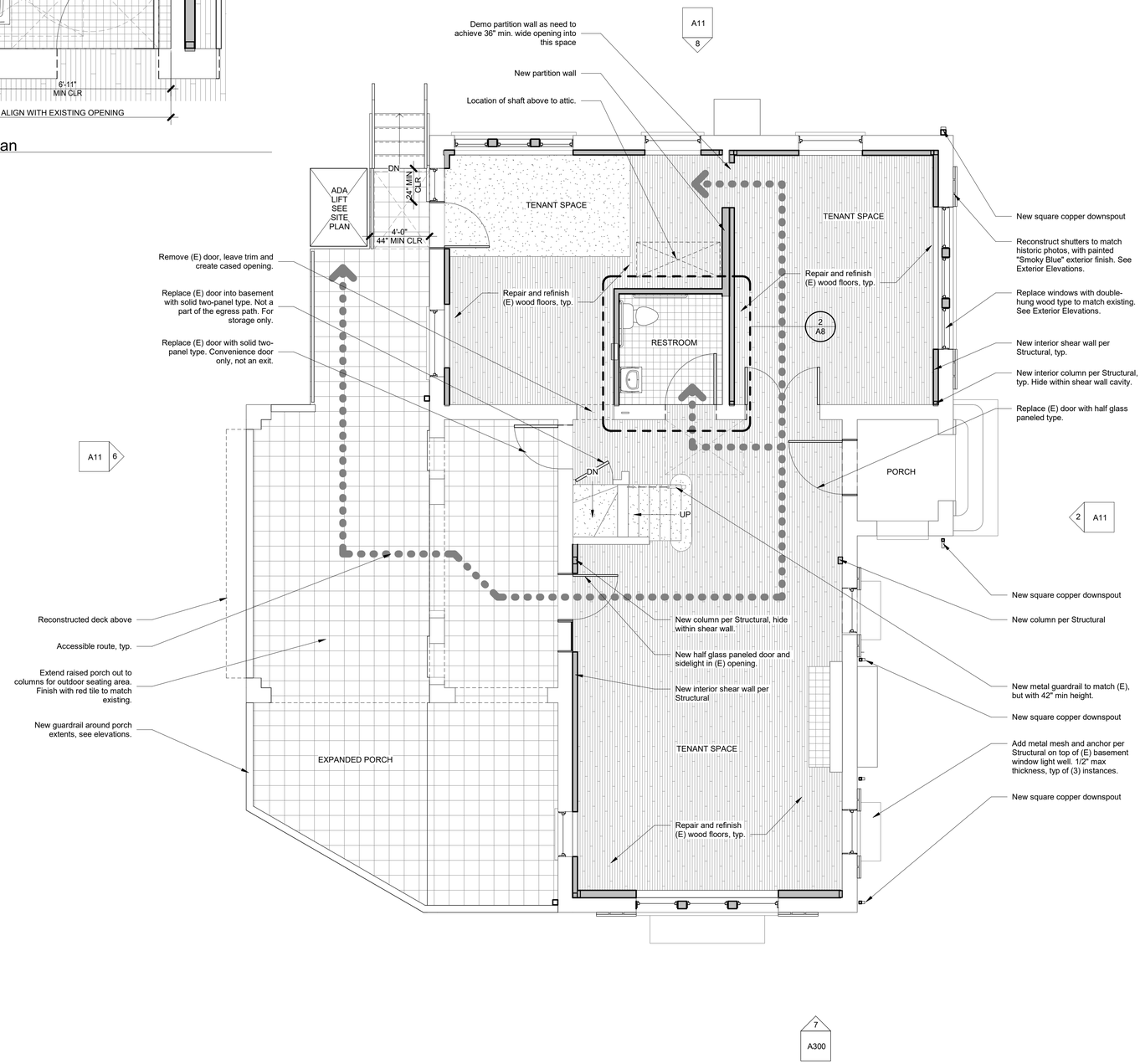

1 First Floor Plan - Proposed
1/4" = 1'-0"

General Notes

1) Keynotes apply to this sheet only.

2) Dimensions with "MIN" "CLR" "MIN CLR" or "ABSOLUTE" are measured from face of wall finish.

3) For typical reach ranges, see detail

4) For door clearances, see detail

5) Room numbering shown here is not to be used for room signage. Confirm with Owner prior to fabrication and installation.

6) For fixture and toilet accessories mounting and location, see Interior Elevations and

7) For Finish, Door and Window information, see A701.

8) Provide backing as needed for all CFCI/OFCI items, including but not limited to: projectors, projector screens, tackboard and dry erase boards. See detail

9) Doors into wheelchair accessible water closet stalls shall be self-closing, typ. u.n.o.

10) All new partition walls shall be continuous to underside of roof deck, typ. u.n.o.

APPL. NO. P21-05568 EXHIBIT F-4 DATE 03/23/2022

PLANNING REVIEW BY _____ DATE _____

TRAFFIC ENG. _____ DATE _____

APPROVED BY _____ DATE _____

CITY OF FRESNO DARM DEPT

PAUL HALAJIAN
ARCHITECTS
389 Clovis Ave, Suite 100
Clovis, CA 93612-1185
T: 559.297.7900 F: 559.297.7950
www.halajianarch.com

LICENSED ARCHITECT — NOT FOR CONSTRUCTION — STATE OF CALIFORNIA

PAUL HALAJIAN ARCHITECTS expressly reserves its common law copyright and other property rights specifically related to the contents of these plans. This document and the ideas and designs incorporated herein, as an instrument of professional service rendered by PAUL HALAJIAN ARCHITECTS, is not to be used in whole or in part for any other project without prior written authorization from PAUL HALAJIAN ARCHITECTS.

PROJECT:
Reza Assemi
Craycroft Change of Occupancy
6545 North Palm Ave, Fresno, CA 93704

SHEET: First Floor Plan - Proposed

DRAWING SET INFORMATION:

10.15.2021	DP Submittal

REVISIONS:

PROJECT NUMBER:
2017-34

SHEET NUMBER:
A8

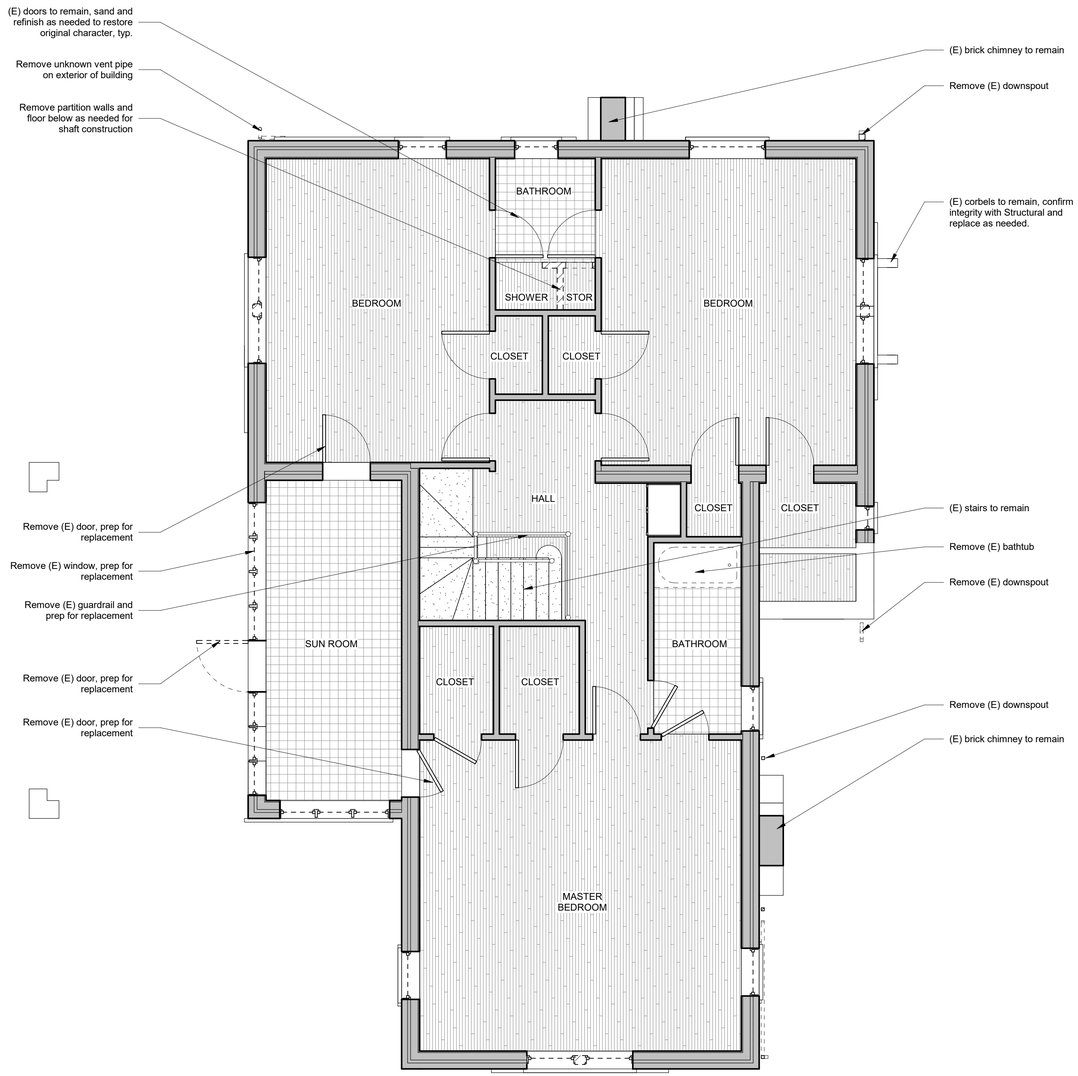

1 Second Floor Plan - Existing
1/4" = 1'-0"

General Notes

1) Keynotes apply to this sheet only.

2) Dimensions with "MIN" "CLR" "MIN CLR" or "ABSOLUTE" are measured from face of wall finish.

3) For typical reach ranges, see detail

4) For door clearances, see detail

5) Room numbering shown here is not to be used for room signage. Confirm with Owner prior to fabrication and installation.

6) For fixture and toilet accessories mounting and location, see Interior Elevations and

7) For Finish, Door and Window information, see A701.

8) Provide backing as needed for all CFCI/OFCI items, including but not limited to: projectors, projector screens, tackboard and dry erase boards. See detail

9) Doors into wheelchair accessible water closet stalls shall be self-closing, typ. u.n.o.

10) All new partition walls shall be continuous to underside of roof deck, typ. u.n.o.

APPL. NO. P21-05568 EXHIBIT F-5 DATE 03/23/2022
PLANNING REVIEW BY _____ DATE _____
TRAFFIC ENG. _____ DATE _____
APPROVED BY _____ DATE _____
CITY OF FRESNO DARM DEPT

PH
PAUL HALAJIAN
ARCHITECTS
389 Clovis Ave, Suite 100
Clovis, CA 93612-1185
T: 559.297.7900 F: 559.297.7950
www.halajianarch.com

LICENSED ARCHITECT
NOT FOR CONSTRUCTION
STATE OF CALIFORNIA

PAUL HALAJIAN ARCHITECTS expressly reserves its common law copyright and other property rights specifically related to the contents of these plans. This document and the ideas and designs incorporated herein, as an instrument of professional service rendered by PAUL HALAJIAN ARCHITECTS, is not to be used in whole or in part for any other project without prior written authorization from PAUL HALAJIAN ARCHITECTS.

PROJECT:
Reza Assemi
Craycroft Change of Occupancy
6545 North Palm Ave, Fresno, CA 93704

SHEET: Second Floor Plan - Existing

DRAWING SET INFORMATION:

10.15.2021	DP Submittal

REVISIONS:

PROJECT NUMBER:
2017-34

SHEET NUMBER:
A9

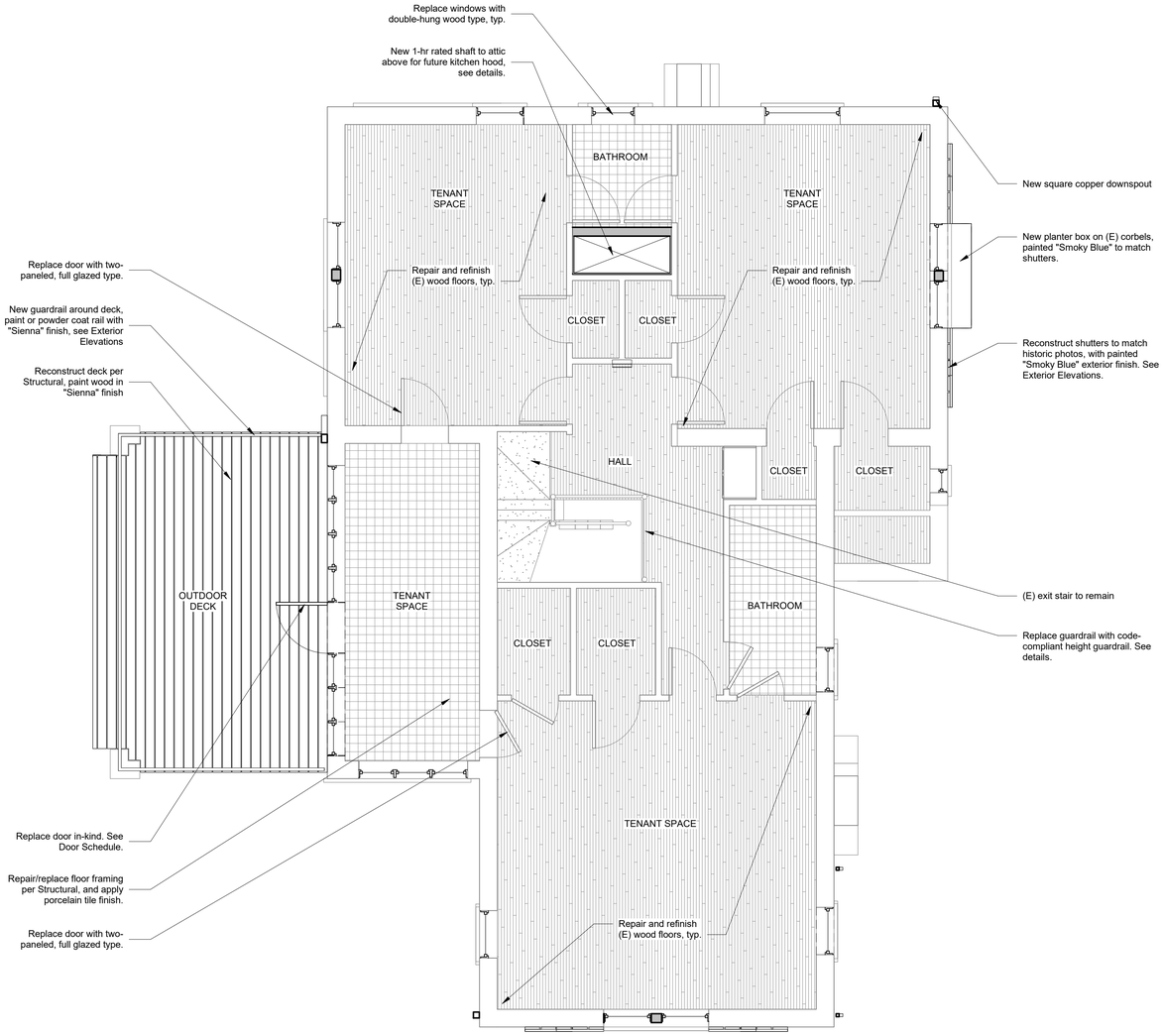

1 Second Floor Plan - Proposed
1/4" = 1'-0"

General Notes

1) Keynotes apply to this sheet only.

2) Dimensions with "MIN" "CLR" "MIN CLR" or "ABSOLUTE" are measured from face of wall finish.

3) For typical reach ranges, see detail

4) For door clearances, see detail

5) Room numbering shown here is not to be used for room signage. Confirm with Owner prior to fabrication and installation.

6) For fixture and toilet accessories mounting and location, see Interior Elevations and

7) For Finish, Door and Window information, see A701.

8) Provide backing as needed for all CFCI/OFCI items, including but not limited to: projectors, projector screens, tackboard and dry erase boards. See detail

9) Doors into wheelchair accessible water closet stalls shall be self-closing, typ. u.n.o.

10) All new partition walls shall be continuous to underside of roof deck, typ. u.n.o.

APPL. NO. P21-05568 EXHIBIT F-6 DATE 03/23/2022
PLANNING REVIEW BY _____ DATE _____
TRAFFIC ENG. _____ DATE _____
APPROVED BY _____ DATE _____
CITY OF FRESNO DARM DEPT

PAUL HALAJIAN
ARCHITECTS
389 Clovis Ave, Suite 100
Clovis, CA 93612-1185
T: 559.297.7900 F: 559.297.7950
www.halajianarch.com

LICENSED ARCHITECT
NOT FOR CONSTRUCTION
STATE OF CALIFORNIA

PAUL HALAJIAN ARCHITECTS expressly reserves its common law copyright and other property rights specifically related to the contents of these plans. This document and the ideas and designs incorporated herein, as an instrument of professional service rendered by PAUL HALAJIAN ARCHITECTS, is not to be used in whole or in part for any other project without prior written authorization from PAUL HALAJIAN ARCHITECTS.

PROJECT:
Reza Assemi
Craycroft Change of Occupancy
6545 North Palm Ave, Fresno, CA 93704

SHEET: Second Floor Plan - Proposed

DRAWING SET INFORMATION:

10.15.2021	DP Submittal

REVISIONS:

PROJECT NUMBER:
2017-34

SHEET NUMBER:
A10

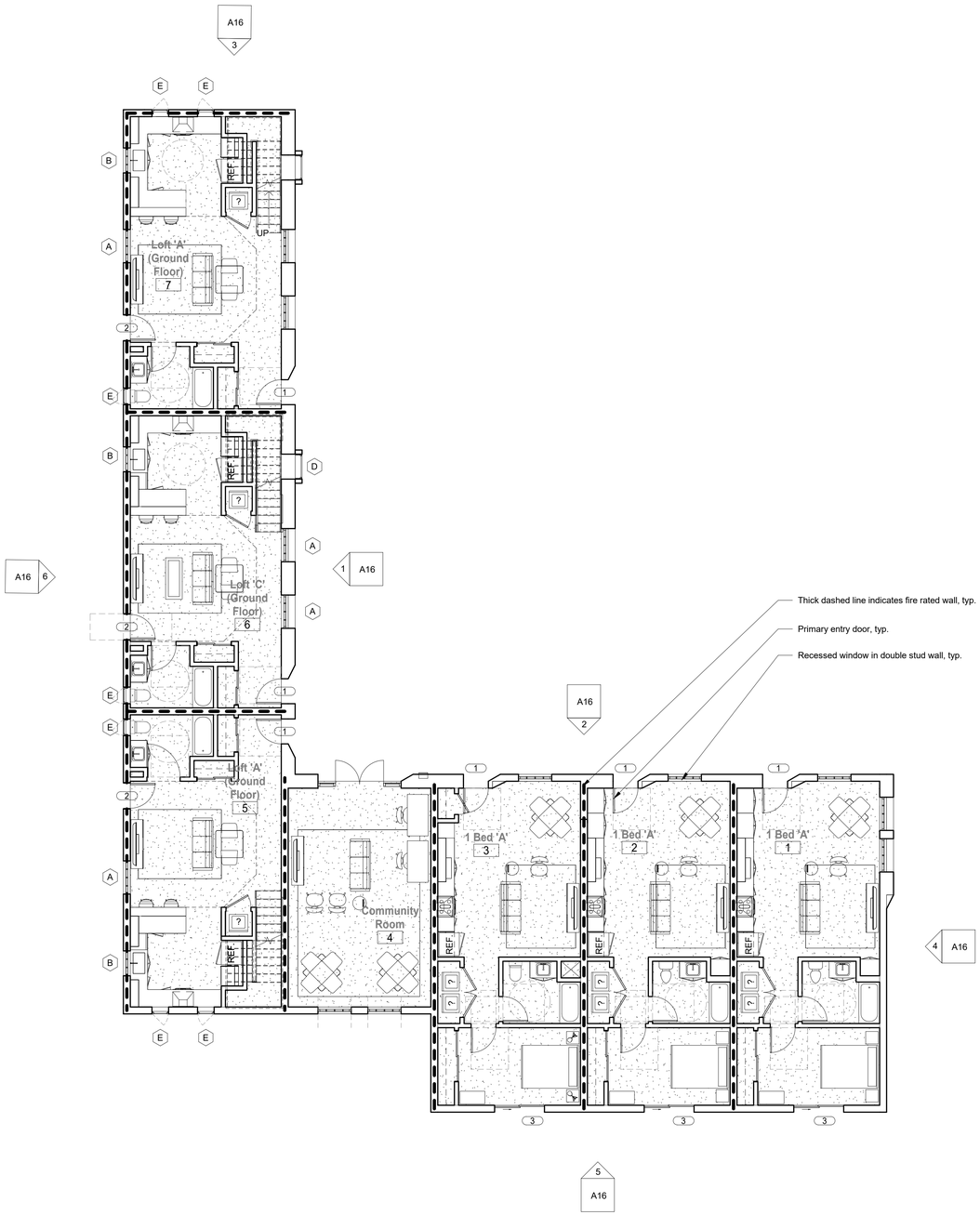

1 First Floor Keynote Plan
1/8" = 1'-0"

General Notes

1) Keynotes apply to this sheet only.

2) Dimensions with "MIN" "CLR" or "MIN CLR" are measured from face of wall finish.

3) For typical reach ranges, see detail

4) For door clearances, see details and

5) Room numbering shown here is not to be used for room signage. Confirm with Owner prior to fabrication and installation.

6) For fixture and toilet accessories mounting and location, see Interior Elevations and

7) For Finish, Door and Window information, see A700-A -- A705-A.

8) Provide backing as needed for all CFCI/OFCI items, including but not limited to: wall-mounted TV's, grab bars, and cabinets. See detail

9) All walls shall be continuous to underside of roof deck, typ. u.n.o.

10) For unit plan info see sheets A206-A - A207-A.

11) See Electrical for pull station locations, typ. u.n.o.

12) For units showing accessible showers, see detail 5 / A910-A

13) All units are required to be compliant with either CBC 11A (adaptable) or CBC 11B (accessible), typ.

14) At accessible units, 1 window in living/bedroom areas to have latch located within prescribed reach (max. 48" A.F.F.). See Window Schedule on A705-A.

15) For more information on fire and sound rated walls, see detail

Legend

- Dashed line indicates fire rating, see A970 for penetration details.
- Thick dash/dot/dot line indicates interior curb, see Structural and
- Dashed line indicates clear space for accessibility, see details, typ.
- Dashed line indicates soffit/wall/roof above, typ.
- A — Window Tag, see A7xx
- 101 — Door Tag, see A7xx
- ? — Keynote Tag, see Legend
- 01 / Axxx — Interior Elevation, see A8xx
- W-1 — Sign Tag, see A9xx
- Room name 101 — Room Tag
- 01 / Axxx — Section, see A4xx
- Exterior Elevation, see A3xx

APPL. NO. P21-05568 EXHIBIT F-7 DATE 03/23/2022
PLANNING REVIEW BY _____ DATE _____
TRAFFIC ENG. _____ DATE _____
APPROVED BY _____ DATE _____
CITY OF FRESNO DARM DEPT

PAUL HALAJIAN
ARCHITECTS
389 Clovis Ave, Suite 100
Clovis, CA 93612-1185
T: 559.297.7900 F: 559.297.7950
www.halajianarch.com

LICENSED ARCHITECT — NOT FOR CONSTRUCTION — STATE OF CALIFORNIA

PAUL HALAJIAN ARCHITECTS expressly reserves its common law copyright and other property rights specifically related to the contents of these plans. This document and the ideas and designs incorporated herein, as an instrument of professional service rendered by PAUL HALAJIAN ARCHITECTS, is not to be used in whole or in part for any other project without prior written authorization from PAUL HALAJIAN ARCHITECTS.

PROJECT:
Reza Assemi Craycroft Housing
6545 North Palm Avenue, Fresno, CA 93704

SHEET: First Floor Plan - Keynote

DRAWING SET INFORMATION:

12.02.2021	DP Submittal

REVISIONS:

PROJECT NUMBER:
2017-34

SHEET NUMBER:
A12

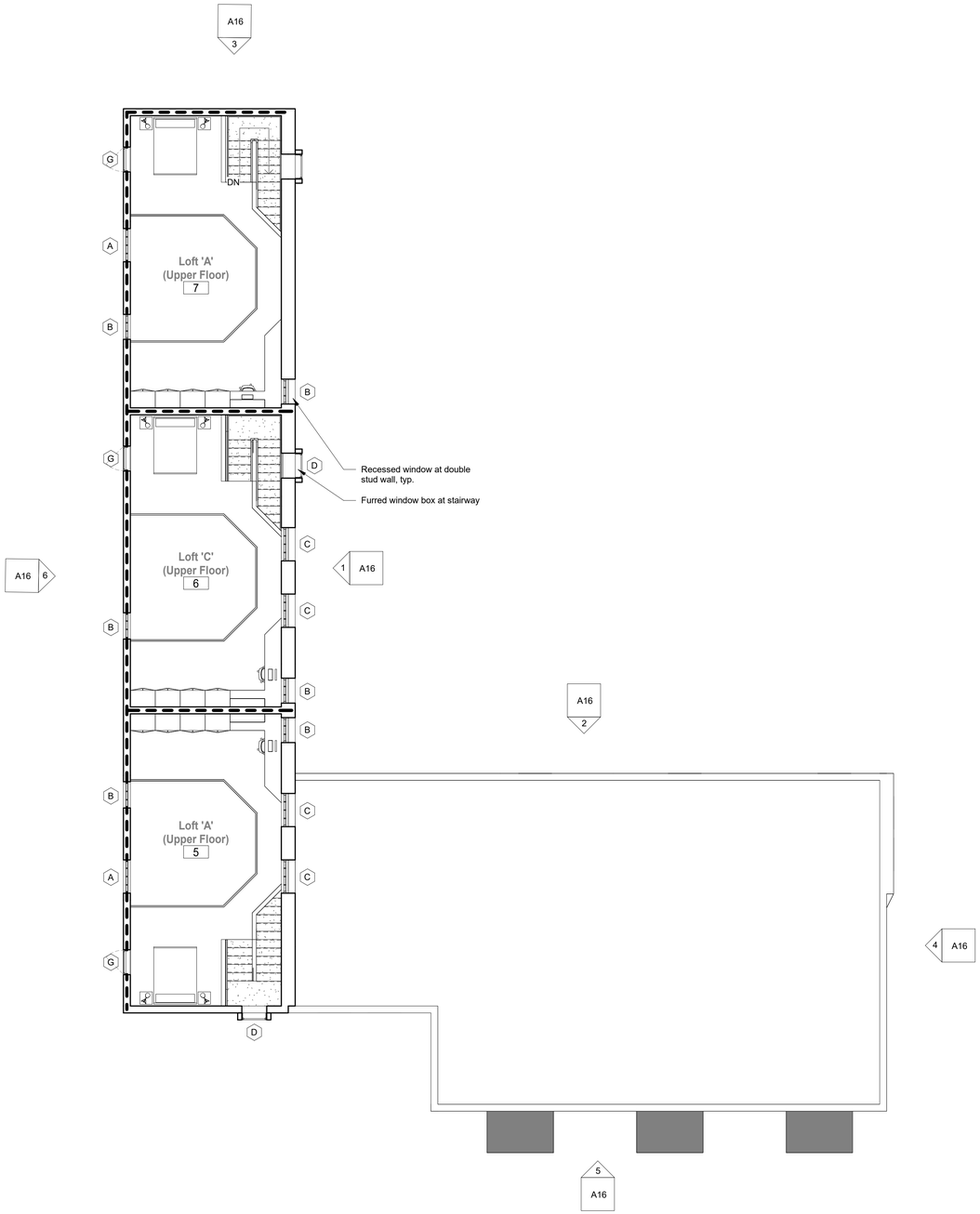

1 Second Floor Keynote Plan
1/8" = 1'-0"

APPL. NO. P21-05568 EXHIBIT F-8 DATE 03/23/2022

PLANNING REVIEW BY _____ DATE _____

TRAFFIC ENG. _____ DATE _____

APPROVED BY _____ DATE _____

CITY OF FRESNO DARM DEPT

General Notes

1) Keynotes apply to this sheet only.

2) Dimensions with "MIN" "CLR" or "MIN CLR" are measured from face of wall finish.

3) For typical reach ranges, see detail

4) For door clearances, see details and

5) Room numbering shown here is not to be used for room signage. Confirm with Owner prior to fabrication and installation.

6) For fixture and toilet accessories mounting and location, see Interior Elevations and

7) For Finish, Door and Window information, see A700-A -- A705-A.

8) Provide backing as needed for all CFCI/OFCI items, including but not limited to: wall-mounted TV's, grab bars, and cabinets. See detail

9) All walls shall be continuous to underside of roof deck, typ. u.n.o.

10) For unit plan info see sheets A206-A - A207-A.

11) See Electrical for pull station locations, typ. u.n.o.

12) For units showing accessible showers, see detail 5 / A910-A

13) All units are required to be compliant with either CBC 11A (adaptable) or CBC 11B (accessible), typ.

14) At accessible units, 1 window in living/bedroom areas to have latch located within prescribed reach (max. 48" A.F.F.). See Window Schedule on A705-A.

15) For more information on fire and sound rated walls, see detail

Legend

- Dashed line indicates fire rating, see A970 for penetration details.
- Thick dash/dot/dot line indicates interior curb, see Structural and
- Dashed line indicates clear space for accessibility, see details, typ.
- Dashed line indicates soffit/wall/roof above, typ.
- A — Window Tag, see A7xx
- W-1 — Sign Tag, see A9xx
- 101 — Door Tag, see A7xx
- Room name 101 — Room Tag
- ? — Keynote Tag, see Legend
- 01 / Axxx — Section, see A4xx
- 01 / Axxx — Interior Elevation, see A8xx
- Exterior Elevation, see A3xx

PH

PAUL HALAJIAN
ARCHITECTS
389 Clovis Ave, Suite 100
Clovis, CA 93612-1185
T: 559.297.7900 F: 559.297.7950
www.halajianarch.com

LICENSED ARCHITECT — NOT FOR CONSTRUCTION — STATE OF CALIFORNIA

PAUL HALAJIAN ARCHITECTS expressly reserves its common law copyright and other property rights specifically related to the contents of these plans. This document and the ideas and designs incorporated herein, as an instrument of professional service rendered by PAUL HALAJIAN ARCHITECTS, is not to be used in whole or in part for any other project without prior written authorization from PAUL HALAJIAN ARCHITECTS.

PROJECT:
Reza Assemi Craycroft Housing
6545 North Palm Avenue, Fresno, CA 93704

SHEET: Second Floor Plan - Keynote

DRAWING SET INFORMATION:

12.02.2021	DP Submittal

REVISIONS:

PROJECT NUMBER:
2017-34

SHEET NUMBER:
A13

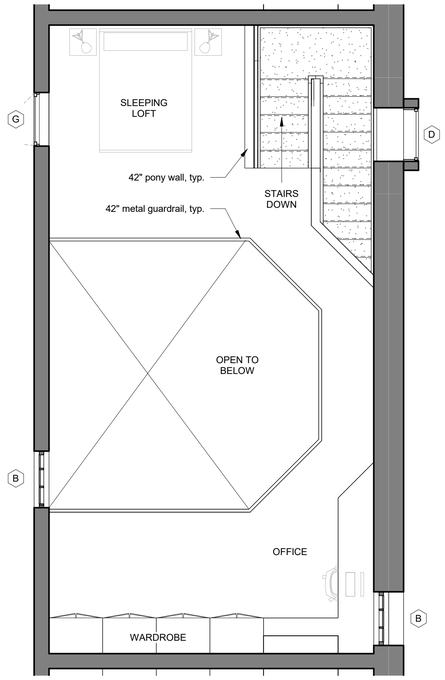

4 Unit Plan - Loft C - Second Floor
1/4" = 1'-0"

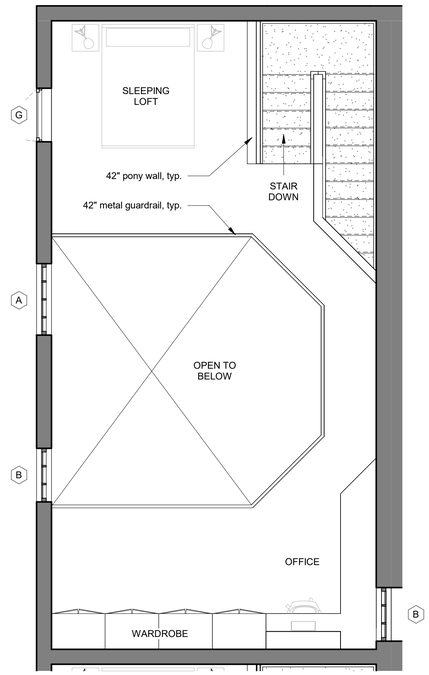

2 Unit Plan - Loft A - Second Floor
1/4" = 1'-0"

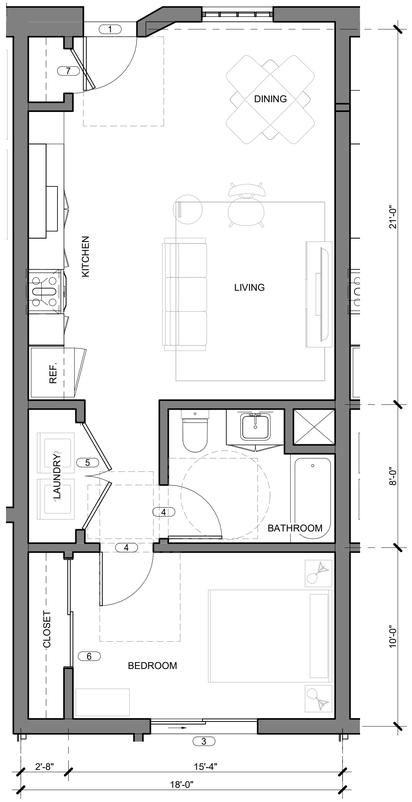

5 Unit Plan - 1 Bed A
1/4" = 1'-0"

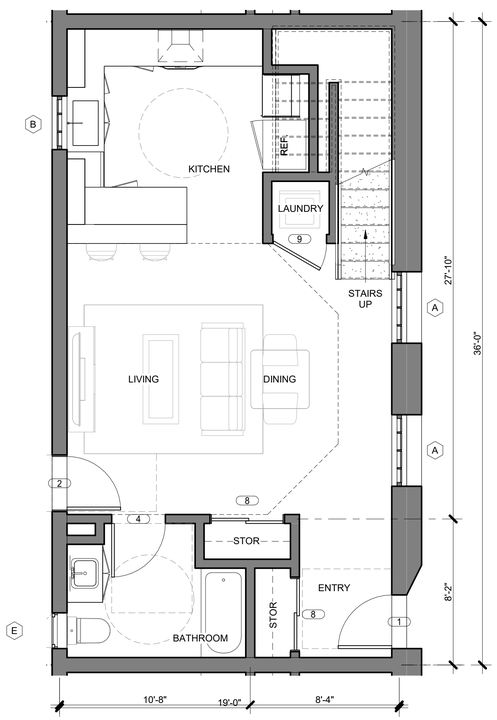

3 Unit Plan - Loft C - First Floor
1/4" = 1'-0"

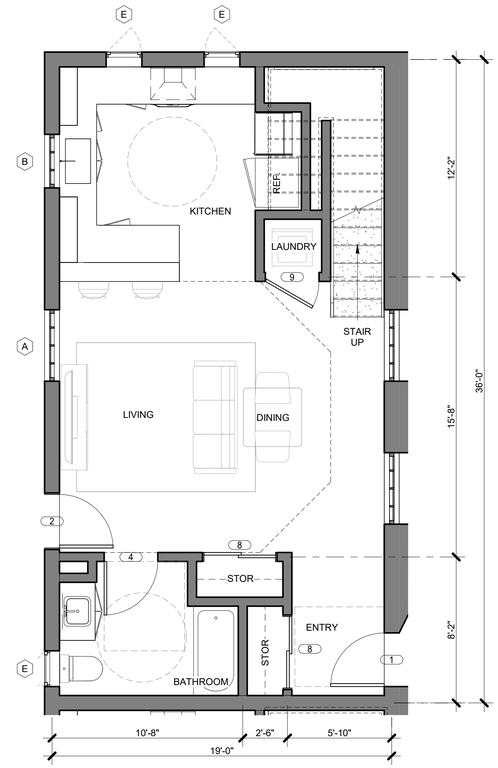

1 Unit Plan - Loft A - First Floor
1/4" = 1'-0"

General Notes

1) Keynotes apply to this sheet only.

2) Dimensions with "MIN" "CLR" or "MIN CLR" are measured from face of wall finish.

3) For typical reach ranges, see detail

4) For door clearances, see details and

5) Room numbering shown here is not to be used for room signage. Confirm with Owner prior to fabrication and installation.

6) For fixture and toilet accessories mounting and location, see Interior Elevations and

7) For Finish, Door and Window information, see A700-A -- A705-A.

8) Provide backing as needed for all CFCI/OFCI items, including but not limited to: wall-mounted TV's, grab bars, and cabinets. See detail

9) All walls shall be continuous to underside of roof deck, typ. u.n.o.

10) For unit plan info see sheets A206-A - A207-A.

11) See Electrical for pull station locations, typ. u.n.o.

12) For units showing accessible showers, see detail 5 / A910-A

13) All units are required to be compliant with either CBC 11A (adaptable) or CBC 11B (accessible), typ.

14) At accessible units, 1 window in living/bedroom areas to have latch located within prescribed reach (max. 48" A.F.F.). See Window Schedule on A705-A.

15) For more information on fire and sound rated walls, see detail

APPL. NO. P21-05568 EXHIBIT F-9 DATE 03/23/2022
PLANNING REVIEW BY _____ DATE _____
TRAFFIC ENG. _____ DATE _____
APPROVED BY _____ DATE _____
CITY OF FRESNO DARM DEPT

PH
PAUL HALAJIAN
ARCHITECTS
389 Clovis Ave, Suite 100
Clovis, CA 93612-1185
T: 559.297.7900 F: 559.297.7950
www.halajianarch.com

LICENSED ARCHITECT
NOT FOR CONSTRUCTION
STATE OF CALIFORNIA

PAUL HALAJIAN ARCHITECTS expressly reserves its common law copyright and other property rights specifically related to the contents of these plans. This document and the ideas and designs incorporated herein, as an instrument of professional service rendered by PAUL HALAJIAN ARCHITECTS, is not to be used in whole or in part for any other project without prior written authorization from PAUL HALAJIAN ARCHITECTS.

PROJECT:
Reza Assemi Craycroft Housing
6545 North Palm Avenue, Fresno, CA 93704

SHEET: Unit Plans

DRAWING SET INFORMATION:

12.02.2021	DP Submittal

REVISIONS:

PROJECT NUMBER:
2017-34

SHEET NUMBER:
A14

Small Shrub. A small shrub shall have a mature height of three to less than five feet and shall be planted at minimum from one-gallon containers.

Medium Shrub. A medium shrub shall have a mature height of between five and eight feet and shall be planted at minimum from five-gallon containers.

Large Shrub. A large shrub shall have a mature height of greater than eight feet and shall be planted at minimum from five-gallon containers.

Depict total landscaped area square footage

Provide landscape irrigation plan

Provide plant schedule

Provide parking lot shading calculation

Depict and identify tree size, by small, medium, or large and comply with Section 15-2307

Tree Information

FMC 15-2308-A-3 requires 1 tree per 2,000 sf of lot coverage for Office districts. Total lot coverage proposed is 7,704.15 sf, therefore (4) trees are required. (17) trees proposed within property lines, OK.

Tree species are as listed below, see Landscape Plan this sheet for location:

(2) poplar
(1) palm
(2) orange
(3) chinese pistache
(1) magnolia

MWELO calculations will be provided at time of building permit submittal.

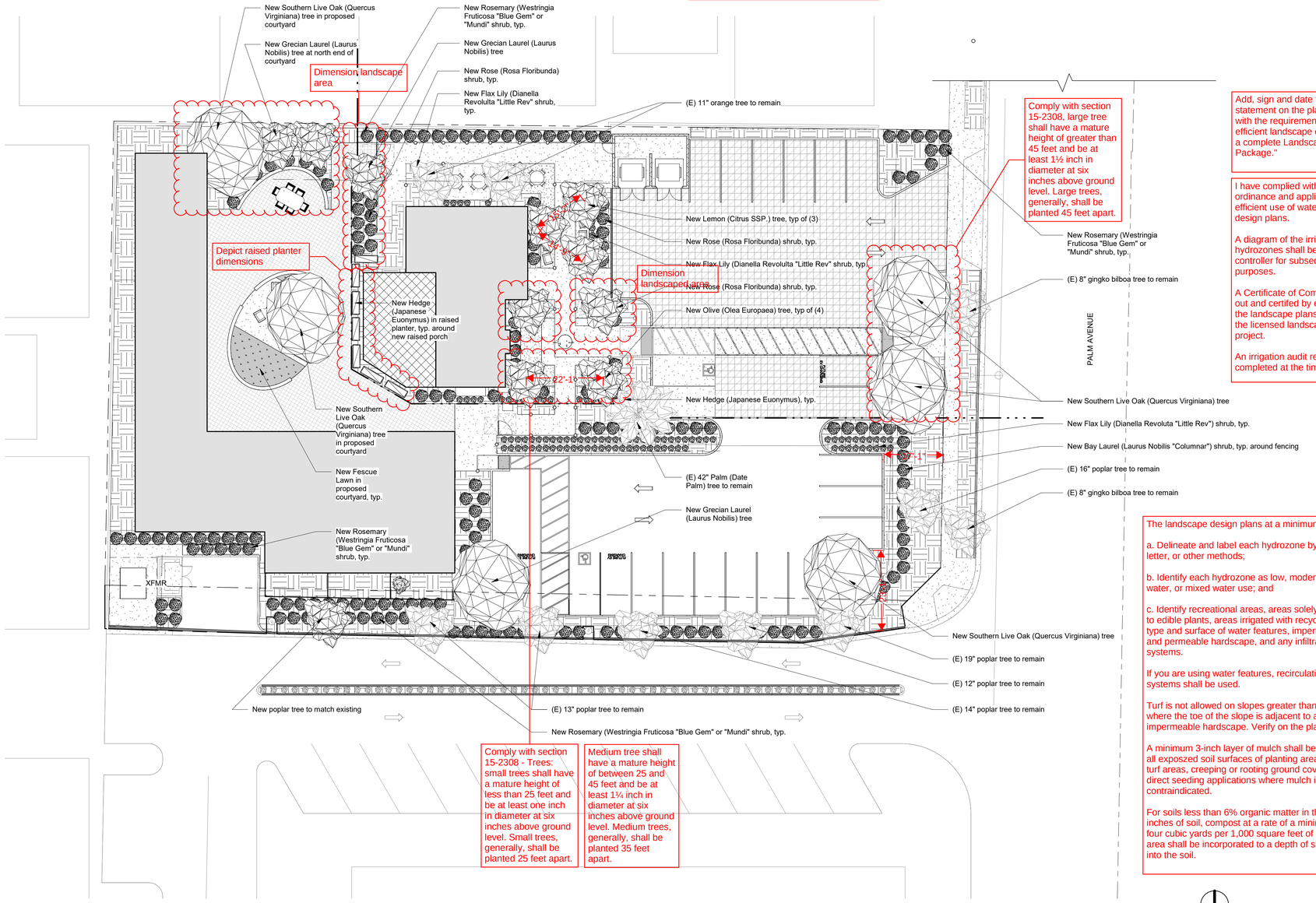

Add, sign and date the following statement on the plans: "I agree to comply with the requirements of the water efficient landscape ordinance and submit a complete Landscape Documentation Package."

I have complied with the criteria of the ordinance and applied them for the efficient use of water in the landscape design plans.

A diagram of the irrigation plan showing hydrozones shall be kept with the irrigation controller for subsequent management purposes.

A Certificate of Completion shall be filled out and certifed by either the designer of the landscape plans, irrigation plans, or the licensed landscape contractor for the project.

An irrigation audit report shall be completed at the time of final inspection.

The landscape design plans at a minimum shall:

a. Delineate and label each hydrozone by number, letter, or other methods;

b. Identify each hydrozone as low, moderate, high water, or mixed water use; and

c. Identify recreational areas, areas solely dedicated to edible plants, areas irrigated with recycled water, type and surface of water features, impermeable and permeable hardscape, and any infiltration systems.

If you are using water features, recirculating water systems shall be used.

Turf is not allowed on slopes greater than 25% where the toe of the slope is adjacent to an impermeable hardscape. Verify on the plans.

A minimum 3-inch layer of mulch shall be applied on all exposzed soil surfaces of planting areas except turf areas, creeping or rooting ground covers, or direct seeding applications where mulch is contraindicated.

For soils less than 6% organic matter in the top 6 inches of soil, compost at a rate of a minimum of four cubic yards per 1,000 square feet of permeable area shall be incorporated to a depth of six inches into the soil.

1 Landscape Plan
1/16" = 1'-0"

APPL. NO. P21-05568 EXHIBIT L DATE 3/23/2022

PLANNING REVIEW BY _____ DATE _____

TRAFFIC ENG. _____ DATE _____

APPROVED BY _____ DATE _____

CITY OF FRESNO DARM DEPT

PAUL HALAJIAN
ARCHITECTS
389 Clovis Ave, Suite 100
Clovis, CA 93612-1185
T: 559.297.7900 F: 559.297.7950
www.halajianarch.com

LICENSED ARCHITECT
NOT FOR CONSTRUCTION
STATE OF CALIFORNIA

PAUL HALAJIAN ARCHITECTS expressly reserves its common law copyright and other property rights specifically related to the contents of these plans. This document and the ideas and designs incorporated herein, as an instrument of professional service rendered by PAUL HALAJIAN ARCHITECTS, is not to be used in whole or in part for any other project without prior written authorization from PAUL HALAJIAN ARCHITECTS.

PROJECT:
Reza Assemi
Site Development
6545 North Palm Avenue, Fresno, CA 93704

SHEET: Landscape Plan

DRAWING SET INFORMATION:

12.02.2021	DP Submittal

REVISIONS:

PROJECT NUMBER:
2017-34

SHEET NUMBER:
A4

PAUL HALAJIAN
ARCHITECTS

Revise total acreage to 0.81 to reflect Lot Line Adjustment

OPERATIONAL STATEMENT

Historic Craycroft House Restoration/Renovation + New Residential Development
6545 North Palm Ave
Fresno, CA 93704

APPL. NO. P21-05568 EXHIBIT O-1 DATE 03/23/2022
PLANNING REVIEW BY _____ DATE _____
TRAFFIC ENG. _____ DATE _____
APPROVED BY _____ DATE _____
CITY OF FRESNO DARM DEPT

APN: 407-762-12
General Plan Designation: O (Office)
Zoning Designation: O (Office)
Community Plan: Bullard Community Plan
Specific Plan: None

Revise number of new residential apartment units to 6. Update total square footage of apartment units

Stephanie Say, of Paul Halajian Architects, on behalf of Owner/Developer Reza Assemi, is requesting approval of a Conditional Use Permit (CUP) for the development of a 0.74 acre site on Palm Avenue in Fresno, California. The proposed project consists of three phases including the rehabilitation of the existing historic Craycroft Home into a restaurant/bar use, (12) new residential apartment units, and extensive site design. The property is zoned O with a planned land use of Office, which permits a full-service restaurant and bar with an approved Conditional Use Permit. We have also received an exemption from the City Planning Department indicating that residential uses would be allowed and encouraged for this property. That correspondence is attached in this submittal.

The existing site currently contains the existing historic Craycroft home along with (33) parking stalls. This building will be rehabilitated into a cold shell space for a future restaurant/bar tenant improvement. This use is complimentary to the Fresno General Plan as indicated for an Office designation by providing retail options to employees who work in such zones. The small scale, boutique residential apartment units are highly complimentary to the surrounding neighborhood uses, which are very similar.

Reza Assemi has been a quality developer in the Valley for many years, and this project strikes a passionate chord with his story. After dreaming of renovating this home for over two decades, it is finally in the process of becoming a reality. The City of Fresno has encouraged the restoration and renovation of this property, to preserve the history of the Craycroft family from the early 1920's.

Project Description

This scope of work includes a rehabilitation of the Historic Craycroft House into a restaurant/bar use, which is approved for an "O -- Office" zoning designation with an approved CUP. The (12) apartment units proposed on-site are allowed per a letter from Dan Zack, which encourages rehabilitation of the historic Craycroft home and allows the income produced from residential uses to help finance that work. The full project buildout includes generous outdoor areas for both residents and commercial visitors, while maintaining the focus on the historic home. All new architecture is designed to be simple and provide a backdrop for an already beautiful home. The parking area in front of the Craycroft House will be an alternate paving material like stained concrete or pavers to make it feel more residential and in character with the residential typology versus a traditional asphalt parking lot. All landscaping will be thoughtfully designed to preserve existing trees where possible and highlight the character of the home.

Phasing

The full property rehabilitation as envisioned cannot be constructed and financed without help from the proposed residential units. As a result, the project will be constructed in phases as outlined below.

Phase 1: Rehabilitation of the existing historic Craycroft house and site improvements as outlined below.

- Adding ADA compliant lift from site to first floor at north rear of building.
- Adding an accessible restroom per code and shaft for future kitchen hood.

T: 559.297.7900
F: 559.297.7950

389 Clovis Ave., Suite 100
Clovis, California 93612

www.halajianarch.com

PAUL HALAJIAN
ARCHITECTS

- Replacing doors, windows and damaged roof tiles with in-kind replacements to improve weatherization and protection from vandalism.
- Updating the home to improve energy efficiency.
- Development of a "backyard" outdoor dining space for the restaurant tenant on the raised patio of the existing historic home.
- Site improvements:
    - Relocating trash/recycling enclosure per City of Fresno Standards
    - Re-working the (E) parking lot to provide proper drainage, access for fire and trash, and to maximize parking stall count suitable for full buildout
    - Adding accessible parking stalls and future EV charging stalls as needed for change of use.

Phase 2: New multi-family residential construction, consisting of (12) units as outlined below.

Update and specific number of studio/loft units and 1-bedroom units

- (6) Studio/loft units and (6) 1-bedroom units
- Placement of a new transformer and additional utilities as required.
- Parking and site improvements:
    - Addition of (12) new parking stalls and necessary drive aisles for residential parking.
    - Improve path of travel to connect the new construction to accessible parking areas and adjacent bus stop on Palm Avenue.
    - Hardscape, landscape, and fencing for security and privacy.

Phase 3: Complete site buildout, including landscape, hardscape and planting.

The residential portion of the site development is necessary to provide funding to preserve the historic Craycroft Home. As a token historic landmark, this residential construction is critical in ensuring the care and attention is given to the quality of construction that the home deserves.

The items in these phases may not be constructed in this particular order. Some items may become more/less urgent depending on the funding of the project. The items outlined above are separated into phases to allow for project tracking and easier funding throughout the project duration.

Discussions with Neighbors + Context

The neighboring properties include office development to the south, and single-story multi-family residential apartments to the west and north. Developer has been in contact with surrounding neighbors, who are generally supportive of the project.

General Plan Support

The proposed project supports several policies outlined in the General Plan, including:

- **"HCR-2-j: Window Replacement"** which supports upkeep and maintenance of historic buildings to ensure integrity and sustainability.
    - Windows in the existing Craycroft Home are proposed to be replaced with similar style wood windows to preserve the character and operation of the existing windows, but provide higher energy efficiency and protect the home from heat and weather damage.
- **"HCR-3-a: Adaptive Reuse"** which supports integration of older buildings into new projects to encourage sustainable building practices.
    - The existing Craycroft home is being rehabilitated into a use that is feasible for the property owner, while maintaining the beauty and character of the historic landmark.

"HCR-3-b: Public Art" which encourages integration of art into historic properties.

APPL. NO. P21-05568 EXHIBIT O-2 DATE 03/23/2022
PLANNING REVIEW BY _____ DATE _____
TRAFFIC ENG. _____ DATE _____
APPROVED BY _____ DATE _____
CITY OF FRESNO DARM DEPT

PAUL HALAJIAN
ARCHITECTS

  - The property will be secured with decorative metal fencing with sculptural elements by a commissioned artist, as well as several sculptures throughout the property as focal points within the curated garden landscape.
- **"HCR-3-c: Contextual Design"** which encourages infill development which is sensitive to surrounding uses.
  - Proposed project includes new construction that is highly contextual, given not only it's use as residential apartments, but in its massing, height, and detailing as well.

In addition, the proposed project is generally supported by the City staff and community, in order to turn a building that has been primarily vacant for the last thirty years into a viable, beautiful resource.

Community Plan Support

The proposed project supports several policies outlined in the Bullard Community Plan, including:

- **"4.2.3.3"** which supports compatibility with neighboring residential uses.
  - Proposed project includes the rehabilitation of a historic landmark to be used as future tenant space. Its preservation provides aesthetically pleasing and historically contextual design.
- **"4.2.3.5"** which supports diversity in office sizes and location.
  - Proposed project includes small scale, boutique style office or restaurant space, which is unique from other adjacent offices in both character and layout.
- **"4.2.3.6"** which supports mixed use development within the Office land use designation.
  - Proposed project includes both residential and office/restaurant uses to encourage diversity in guests/residents as well as more visibility and activity on the site during hours where the restaurant/office may be closed.

Guests, Operation and Employees

The proposed multi-family residential will provide constant, 24/7 occupancy and activity on the site, providing extra security for the property. The restaurant/bar portion will have extended operating hours, likely from lunchtime well into the evening. Any noise generated by this use will be closely monitored and regulated by the building owner and future tenants. Expected operating hours are Sunday – Thursday from 12pm – 9pm, Friday – Saturday 12pm – 12am.

Residential visitors will be limited to guests of tenants only, and restaurant/bar anticipates a small visitor load, around 50 guests per day. Commercial deliveries will consist of mail/parcel service 1-2 times per day, trash and recycling collection 1 time per week, and food deliveries 3 times per month. All residential and commercial visitors and deliveries will enter the site through the existing driveway along Palm Avenue.

Employees include up to (5) for the restaurant/bar use and (1) off-site manager for the residential maintenance and management.

Noise/Light Generation

Special events may occur at the discretion of the future tenant. They will be limited to live amplified music at the outdoor dining area 4x a year maximum. All live outdoor music will comply with the requirements as specified in the noise ordinance. [FMC 15-2506] Noise will be limited between the hours of 10pm and 7am. Construction noise caused by site improvements will be completed within normal business hours and will not significantly add to the overall noise level of the community.

Outdoor lighting is to be provided for building security, normal evening use (outdoor dining and parking areas) and occupant egress. All lights will be shielded-type and controlled to meet Code Requirements.

Signage

APPL. NO. P21-05568 EXHIBIT O-3 DATE 03/23/2022
PLANNING REVIEW BY _____ DATE _____
TRAFFIC ENG. _____ DATE _____
APPROVED BY _____ DATE _____
CITY OF FRESNO DARM DEPT

PAUL HALAJIAN
ARCHITECTS

Signage is not included in this scope of work and will be handled by a future tenant improvement. All signage will be in character with the historic home, and will go through necessary City approvals at that time.

Security Measures

The residential portion of the property will be secured with greenery and/or metal fencing at the front and south side to create a private atmosphere for residents and guests. The vehicular access will also be gated, with a decorative sliding metal gate, accessed via wireless fob. This fencing will be covered with greenery like vines or hedges to reduce its visual impact. Commercial areas and the historic rehabilitation will be open to the public, preserving the view of the historic landmark.

Summary

In summary, the proposed project is supported by various members of City staff and the community, with a highly contextual approach to scale and form relative to the existing history of the site. It will provide 12 new boutique-style housing units to Fresno, and provide a unique, small-scale local dining experience to celebrate our local architecture and variety of fresh food.

APPL. NO. P21-05568 EXHIBIT O-4 DATE 03/23/2022

PLANNING REVIEW BY _____ DATE _____

TRAFFIC ENG. _____ DATE _____

APPROVED BY _____ DATE _____

CITY OF FRESNO DARM DEPT

6545 and 6547 N Palm Ave

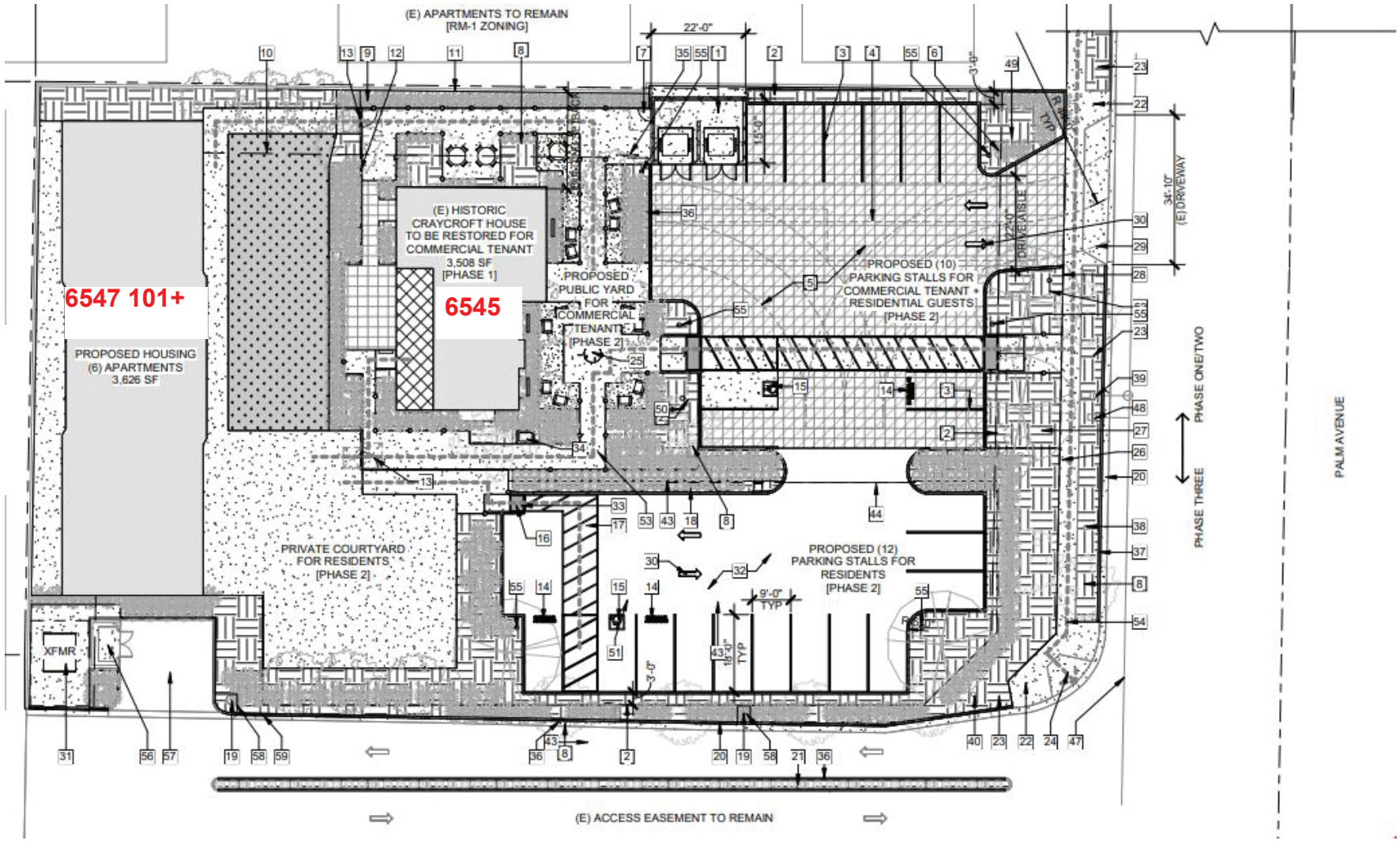

Revised Official Address Plan

APPL NO. _____ EXHIBIT ____ DATE 7/1/2022
PROJ ENG. _____ DATE _____
TRAFFIC ENG. _____ DATE _____
COND. APPROVED BY Nicholas Caldera 7/1/2022
DATE
CITY OF FRESNO PLANNING & DEVELOPMENT DEPT

Nicholas Caldera

* The Planning Division will add the six apartment unit numbers into the official address system after building permits have been issued.

*The site address for the property is 6545 N Palm Ave S/A

6547 101+

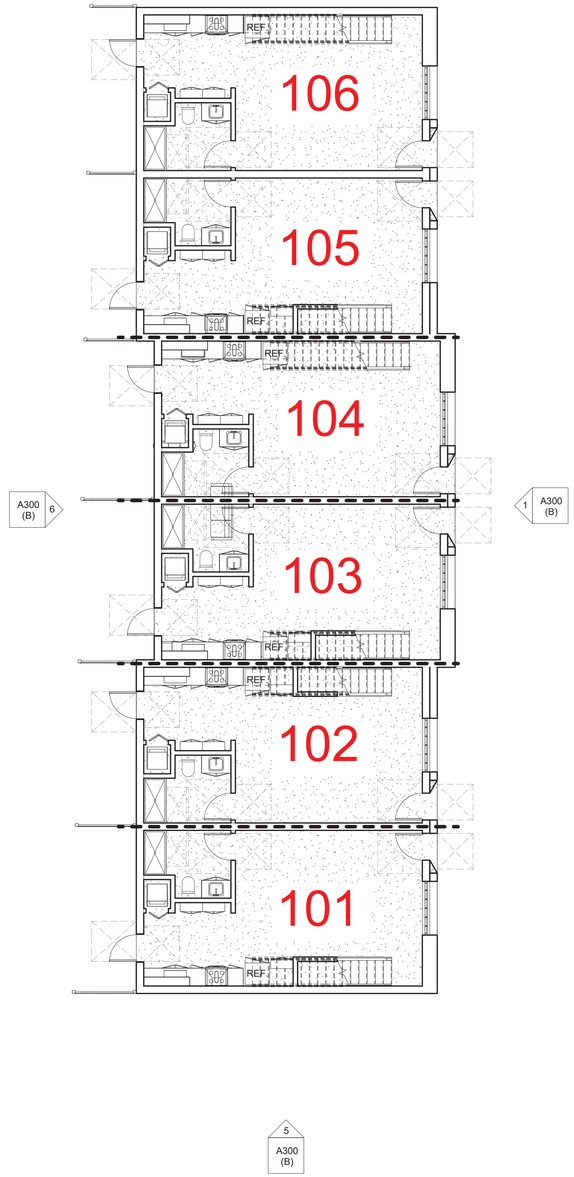

1 First Floor Keynote Plan
1/8" = 1'-0"

General Notes

1) Keynotes apply to this sheet only.

2) Dimensions with "MIN" "CLR" or "MIN CLR" are measured from face of wall finish.

3) For typical reach ranges, see detail

4) For door clearances, see details and

5) Room numbering shown here is not to be used for room signage. Confirm with Owner prior to fabrication and installation.

6) For fixture and toilet accessories mounting and location, see Interior Elevations and

7) For Finish, Door and Window information, see A700-A -- A705-A.

8) Provide backing as needed for all CFCI/OFCI items, including but not limited to: wall-mounted TV's, grab bars, and cabinets. See detail

9) All walls shall be continuous to underside of roof deck, typ. u.n.o.

10) For unit plan info see sheets A206-A - A207-A.

11) See Electrical for pull station locations, typ. u.n.o.

12) For units showing accessible showers, see detail 5 / A910-A

13) All units are required to be compliant with either CBC 11A (adaptable) or CBC 11B (accessible), typ.

14) At accessible units, 1 window in living/bedroom areas to have latch located within prescribed reach (max. 48" A.F.F.). See Window Schedule on A705-A.

15) For more information on fire and sound rated walls, see detail

Legend

- Dashed line indicates fire rating, see A970 for penetration details.
- Thick dash/dot/dot line indicates interior curb, see Structural and
- Dashed line indicates clear space for accessibility, see details, typ.
- Dashed line indicates soffit/wall/roof above, typ.
- A — Window Tag, see A7xx
- 101 — Door Tag, see A7xx
- ? — Keynote Tag, see Legend
- 01 / Axxx — Interior Elevation, see A8xx
- W-1 — Sign Tag, see A9xx
- Room name / 101 — Room Tag
- 01 / Axxx — Section, see A4xx
- Exterior Elevation, see A3xx

PH

PAUL HALAJIAN
ARCHITECTS
389 Clovis Ave, Suite 100
Clovis, CA 93612-1185
T: 559.297.7900 F: 559.297.7950
www.halajianarch.com

LICENSED ARCHITECT — NOT FOR CONSTRUCTION — STATE OF CALIFORNIA

PAUL HALAJIAN ARCHITECTS expressly reserves its common law copyright and other property rights specifically related to the contents of these plans. This document and the ideas and designs incorporated herein, as an instrument of professional service rendered by PAUL HALAJIAN ARCHITECTS, is not to be used in whole or in part for any other project without prior written authorization from PAUL HALAJIAN ARCHITECTS.

PROJECT:
Reza Assemi
Craycroft Housing
6545 North Palm Avenue, Fresno, CA 93704

SHEET: First Floor Plan - Keynote

DRAWING SET INFORMATION:

12.02.2021	DP Submittal

REVISIONS:

PROJECT NUMBER:
2017-34

SHEET NUMBER:
A201 (B)

City of FRESNO

DEPARTMENT OF PUBLIC UTILITIES

MEMORANDUM

DATE: April 11, 2022

TO: MINDI MARIBOHO – Development Services Coordinator
Planning & Development Department – Current Planning

FROM: ROBERT A. DIAZ, Supervising Engineering Technician
Department of Public Utilities – Utilities Planning & Engineering

KEVIN GRAY, Supervising Engineering Technician
Department of Public Utilities – Utilities Planning & Engineering

SUBJECT: DPU CONDITIONS OF APPROVAL P21-05568 CRAYCROFT HOME APN 407-762-12

General Requirements

1. All Department of Public Utilities facilities shall be constructed in accordance with The Department of Public Works standards, specifications, and policies.

2. Street work permit is required for any work in the Right-of-Way.

Water Service Requirements

1. On-site water facilities shall remain private.

Water Supply Requirements

1. The existing property is currently served with one 1-inch water meter.

    a. If the total domestic, commercial, industrial and irrigation water demands for the applicant's proposed project can be accommodated with the existing one 1-inch water meter, then the applicant shall not be required to pay a Water Capacity Fee Charge.

    b. If the total domestic, commercial, industrial and irrigation water demands for the applicant's proposed project cannot be accommodated with the one 1-inch water meter, and an additional water meter or a larger water meter is

required, then the applicant shall be required to pay a Water Capacity Fee Charge.

c. If a larger water meter or fire service is required to accommodate the new, larger water demands, then the Water Capacity Fee Charge shall be calculated by subtracting the Water Capacity Fee Charge associated with the larger water meter size required for the applicant's project. The Water Capacity Fee Charges for different meter sizes are published in the city's Master Fee Schedule.

d. The City reserves the right to require an applicant to increase or decrease the size of a water meter for a project to ensure that the meter is properly sized to accommodate fire protection requirements, and to allow for accurate volumetric flow measurements at low- and high-flow conditions.

e. The Water Capacity Fee Charge for any new or expanded service connection shall be payable prior to the issuance of a building permit at the fee level in effect on the date such permit is issued.

The project applicant shall be required to pay all other water-related fees and charges in accordance with the City's Master Fee Schedule and Municipal Code.

Sewer Requirements

The nearest sanitary sewer main to serve the proposed project is an 8-inch sewer main located in West Spruce Avenue. Sanitary sewer facilities are available to provide service to the site subject to the following requirements:

1. On-site sanitary sewer facilities shall be private.

2. The Project Developer shall contact Utility Billing and Collection Services at (559) 621-6765 prior to pulling building permits regarding conditions of service for special users.

Sanitary Sewer Fees

The following Sewer Connection Charges are due and shall be paid for the Project:

1. Upon connection of this Project to the City Sewer System the owner shall be subject to payment of Sewer Facility charges per Fresno Municipal Code Sections 6-304 and 6-305. Sewer Facility Charges consist of two components, a Wastewater Facilities Charge and Trunk Sewer Charge where applicable.

2. Sewer Facility Charges are collected after occupancy on a monthly basis over time based on metered (water or sewer effluent) usage. The developer may contact the Department of Public Utilities/Wastewater-Environmental Control at (559) 621-5153 to receive an estimated cost of the Sewer Facility Charges applicable to the project (based on a constant sewer discharge and loading (Biochemical Oxygen Demand [BOD] and Total Suspended Solids [TSS] levels anticipated) at the current rates in effect, at that time, per Fresno's Master Fee Resolution. The developer shall provide data regarding estimated sewer discharge rates [flow] and loading [BOD/TSS levels] required for calculating the estimated charge.

Solid Waste Requirements

Location will be serviced by Allied Waste. Please contact at 559-275-1551 or 1-800-493-4285 for servicing.

1. This location will require a one, 2-cell trash enclosure, designed to accommodate separate facilities containing 2 - 4cu. yd. bins, one for trash and one for recycling collection to be constructed to current Solid Waste standards (P-33, P-34 and P-95) to be serviced weekly.

2. Developer will need to provide a 44’ (centerline) turning radius at all corners and a T-turnaround (or hammerhead) area where the solid waste vehicle is to turn around.

FRESNO METROPOLITAN FLOOD CONTROL DISTRICT
NOTICE OF REQUIREMENTS

File No. 210.413

PUBLIC AGENCY

STEVEN LIENG
DEVELOPMENT SERVICES/PLANNING
CITY OF FRESNO
2600 FRESNO ST., THIRD FLOOR
FRESNO, CA 93721

DEVELOPER

STEPHANIE SAY, PAUL HALAJIAN ARCHITECTS
389 CLOVIS AVE., SUITE100
CLOVIS, CA 93612

PROJECT NO: **2021-05568**

ADDRESS: **6545 N. PALM AVE.**

APN: **407-762-12**

SENT: **April 13, 2022**

Drainage Area(s)	Preliminary Fee(s)	Development Review Service Charge(s)	Fee(s)	
I	$0.00	NOR Review	$50.00	To be paid prior to release of District comments to Public Agency and Developer.
		Grading Plan Review	$0.00	Amount to be submitted with first grading plan submittal.

Total Drainage Fee: $0.00 **Total Service Charge: $50.00**

The proposed development will generate storm runoff which produces potentially significant environmental impacts and which must be properly discharged and mitigated pursuant to the California Environmental Quality Act and the National Environmental Policy Act. The District in cooperation with the City and County has developed and adopted the Storm Drainage and Flood Control Master Plan. Compliance with and implementation of this Master Plan by this development project will satisfy the drainage related CEQA/NEPA impact of the project mitigation requirements.

Pursuant to the District's Development Review Fee Policy, the subject project shall pay review fees for issuance of this Notice of Requirements (NOR) and any plan submittals requiring the District's reviews. The NOR fee shall be paid to the District by Developer before the Notice of Requirement will be submitted to the City. The Grading Plan fee shall be paid upon first submittal. The Storm Drain Plan fee shall be paid prior to return/pick up of first submittal.

The proposed development shall pay drainage fees pursuant to the Drainage Fee Ordinance prior to issuance of a building permit at the rates in effect at the time of such issuance. The fee indicated above is valid through 2/28/23 based on the site plan submitted to the District on 3/23/22 Contact FMFCD for a revised fee in cases where changes are made in the proposed site plan which materially alter the proposed impervious area.

Considerations which may affect the fee obligation(s) or the timing or form of fee payment:

a.) Fees related to undeveloped or phased portions of the project may be deferrable.

b.) Fees may be calculated based on the actual percentage of runoff if different than that typical for the zone district under which the development is being undertaken and if permanent provisions are made to assure that the site remains in that configuration.

c.) Master Plan storm drainage facilities may be constructed, or required to be constructed in lieu of paying fees.

d.) The actual cost incurred in constructing Master Plan drainage system facilities is credited against the drainage fee obligation.

e.) When the actual costs incurred in constructing Master Plan facilities exceeds the drainage fee obligation, reimbursement will be made for the excess costs from future fees collected by the District from other development.

f.) Any request for a drainage fee refund requires the entitlement cancellation and a written request addressed to the General Manager of the District within 60 days from payment of the fee. A non refundable $300 Administration fee or 5% of the refund whichever is less will be retained without fee credit.

FR CUP No. 2021-05568

FRESNO METROPOLITAN FLOOD CONTROL DISTRICT
NOTICE OF REQUIREMENTS

Approval of this development shall be conditioned upon compliance with these District Requirements.

1.
- **X** **a.** Drainage from the site shall BE DIRECTED TO PALM AVENUE.
- ___ **b.** Grading and drainage patterns shall be as identified on Exhibit No.
- ___ **c.** The grading and drainage patterns shown on the site plan conform to the adopted Storm Drainage and Flood Control Master Plan.

2. The proposed development shall construct and/or dedicate Storm Drainage and Flood Control Master Plan facilities located within the development or necessitated by any off-site improvements required by the approving agency:

- ___ Developer shall construct facilities as shown on Exhibit No. 1 as
- **X** None required.

3. The following final improvement plans and information shall be submitted to the District for review prior to final development approval:

- ___ Grading Plan
- ___ Street Plan
- ___ Storm Drain Plan
- ___ Water & Sewer Plan
- ___ Final Map
- ___ Drainage Report (to be submitted with tentative map)
- ___ Other
- **X** None Required

4. Availability of drainage facilities:

- **X** **a.** Permanent drainage service is available provided the developer can verify to the satisfaction of the City that runoff can be safely conveyed to the Master Plan inlet(s).
- ___ **b.** The construction of facilities required by Paragraph No. 2 hereof will provide permanent drainage service.
- ___ **c.** Permanent drainage service will not be available. The District recommends temporary facilities until permanent service is available.
- ___ **d.** See Exhibit No. 2.

5. The proposed development:

- ___ Appears to be located within a 100 year flood prone area as designated on the latest Flood Insurance Rate Maps available to the District, necessitating appropriate floodplain management action. (See attached Floodplain Policy.)
- **X** Does not appear to be located within a flood prone area.

6.
- ___ The subject site contains a portion of a canal or pipeline that is used to manage recharge, storm water, and/or flood flows. The existing capacity must be preserved as part of site development. Additionally, site development may not interfere with the ability to operate and maintain the canal or pipeline.

FR CUP No. 2021-05568

FR CUP No. 2021-05568

7. The Federal Clean Water Act and the State General Permits for Storm Water Discharges Associated with Construction and Industrial Activities (State General Permits) require developers of construction projects disturbing one or more acres, and discharges associated with industrial activity not otherwise exempt from National Pollutant Discharge Elimination System (NPDES) permitting, to implement controls to reduce pollutants, prohibit the discharge of waters other than storm water to the municipal storm drain system, and meet water quality standards. These requirements apply both to pollutants generated during construction, and to those which may be generated by operations at the development after construction.

a. State General Permit for Storm Water Discharges Associated with Construction Activities, effective July 1, 2010, as amended. A State General Construction Permit is required for all clearing, grading, and disturbances to the ground that result in soil disturbance of at least one acre (or less than one acre) if part of a larger common plan of development or sale). Permittees are required to: submit a Notice of Intent and Permit Registration Documents to be covered and must pay a permit fee to the State Water Resources Control Board (State Board), develop and implement a storm water pollution prevention plan, eliminate non-storm water discharges, conduct routine site inspections, train employees in permit compliance, and complete an annual certification of compliance.

b. State General Permit for Storm Water Discharges Associated with Industrial Activities, April, 2014 (available at the District Office). A State General Industrial Permit is required for specific types of industries described in the NPDES regulations or by Standard Industrial Classification (SIC) code. The following categories of industries are generally required to secure an industrial permit: manufacturing; trucking; recycling; and waste and hazardous waste management. Specific exemptions exist for manufacturing activities which occur entirely indoors. Permittees are required to: submit a Notice of Intent to be covered and must pay a permit fee to the State Water Resources Control Board, develop and implement a storm water pollution prevention plan, eliminate non-storm water discharges, conduct routine site inspections, train employees in permit compliance, sample storm water runoff and test it for pollutant indicators, and annually submit a report to the State Board.

c. The proposed development is encouraged to select and implement storm water quality controls recommended in the Fresno-Clovis Storm Water Quality Management Construction and Post-Construction Guidelines (available at the District Office) to meet the requirements of the State General Permits, eliminate the potential for non-storm water to enter the municipal storm drain system, and where possible minimize contact with materials which may contaminate storm water runoff.

8. A requirement of the District may be appealed by filing a written notice of appeal with the Secretary of the District within ten days of the date of this Notice of Requirements.

9. The District reserves the right to modify, reduce or add to these requirements, or revise fees, as necessary to accommodate changes made in the proposed development by the developer or requirements made by other agencies.

10. **X** See Exhibit No. 2 for additional comments, recommendations and requirements.

Debbie Campbell

Digitally signed by Debbie Campbell Date: 4/13/2022 12:01:16 PM

Debbie Campbell
Design Engineer, RCE

Gary Chapman

Digitally signed by Gary W. Chapman Date: 4/7/2022 10:52:29 AM

Gary W. Chapman
Engineering Tech III

CC:

REZA ASSEMI

1677 W. SHAW

FRESNO, CA 93711

OTHER REQUIREMENTS

EXHIBIT NO. 2

In an effort to improve storm runoff quality, outdoor storage areas shall be constructed and maintained such that material that may generate contaminants will be prevented from contact with rainfall and runoff and thereby prevent the conveyance of contaminants in runoff into the storm drain system.

The District encourages, but does not require that roof drains from non-residential development be constructed such that they are directed onto and through a landscaped grassy swale area to filter out pollutants from roof runoff.

Runoff from areas where industrial activities, product, or merchandise come into contact with and may contaminate storm water must be treated before discharging it off-site or into a storm drain. Roofs covering such areas are recommended. Cleaning of such areas by sweeping instead of washing is to be required unless such wash water can be directed to the sanitary sewer system. Storm drains receiving untreated runoff from such areas shall not be connected to the District's system. Loading docks, depressed areas, and areas servicing or fueling vehicles are specifically subject to these requirements. The District's policy governing said industrial site NPDES program requirements is available on the District's website at: www.fresnofloodcontrol.org or contact the District's Environmental Department for further information regarding these policies related to industrial site requirements.

Fresno Unified School District
Achieving our Greatest Potential!

MEASURE M
Facilities Management & Planning

BOARD OF EDUCATION
Elizabeth Jonasson Rosas, President
Genoveva Islas, Clerk
Valerie F. Davis
Claudia Cazares
Major Terry Slatic USMC (Retired)
Keshia Thomas
Trustee Area 5 (Vacant)

SUPERINTENDENT
Robert G. Nelson, Ed.D.

March 24, 2022

Steven Lieng
Development and Resource Management
City of Fresno
2600 Fresno Street, Third Floor
Fresno, CA 93721-3604

SUBJECT: **PLANNING APPLICATION P21-05568**
PROPOSED MIXED-USE DEVELOPMENT
6545 N. PALM AVE.

Dear Mr. Lieng,

Fresno Unified School District submits the following response to your request for review and comment on the above referenced Planning Application. The applicant proposes three phases of mixed-use building projects to be located at 6545 North Palm Avenue. The first phase consists of the rehabilitation of the existing historic Craycroft Home into a restaurant with a proposed bar. Phase two proposes the construction of a private courtyard, public yard, and proposed parking stalls. Phase three will consist of the construction of 12 multi-family units behind the existing house.

Any urban residential development occurring as a result of project approval will have an impact on the District's student housing capacity. The District, through local funding, is in a position to partially mitigate its shortage of classrooms to accommodate planned population growth for the foreseeable future. However, the District recognizes that the legislature, as a matter of law, has deemed, under Government Code Section 65996, that all school facilities impacts are mitigated as a consequence of SB 50's Level 1, 2 and 3 developer fee legislative provisions.

New development on the above referenced property is subject to development fee rates in effect at the time of payment; currently $4.08 per square foot for residential development, and $0.66 per square foot for commercial development. For mixed use projects the residential units and commercial space would be charged the residential and commercial rates, respectively. Fees will be calculated pursuant to rates effective at the time of payment and new development on the property will be subject to the development fee prior to issuance of a building permit.

The property is located within approximately 935 feet from Kratt Elementary School. As per the State of California's Alcohol Beverage Control Act, an alcohol license can be refused by the State if the location is "within at least 600 feet from schools." Per California Business and Professions Code Section 23789(b), "The department is specifically authorized to refuse the issuance, other than renewal or ownership transfer, of any retail license for premises located within at least 600 feet of schools and public playgrounds or nonprofit youth facilities, including, but not limited to, facilities serving Girl Scouts, Boy Scouts, or Campfire Girls. This distance shall be measured pursuant to rules of the department." The District **does not support** the alcohol license request and continues to have concerns regarding potentially dangerous interaction between our students and the proposed operation. FUSD's response on this project is subject to the Alcohol Beverage Control Act and the Fresno Police Department's review and support of the project with regard to the concentration and use of alcohol-related business in close proximity to school sites

The project is presently within the attendance areas of the schools identified below.

Elementary School: Starr
Middle School: Tenaya
High School: Bullard

The district appreciates the opportunity to comment on the proposed project. Please contact our office at 457-3066 if you have any questions or require additional information regarding our comments.

Sincerely,

Alex Belanger, Chief Executive
Operational Services

AB:hh

DWC

CITY OF FRESNO
DEVELOPMENT AND IMPACT FEE ESTIMATE

The following estimates are based on preliminary conceptual information. The exact fee obligation will be computed at the time of development by Public Works Department, Land Division & Engineering. The fee rates in effect at the time of development shall apply.

Proposed Development: Craycroft Home Mixed-Use - 6545 N. Palm Avenue

A.P.N. 407-762-12

Planned Land Use: Commercial Office / Medium-High Density Residential

Current Zoning: O/UGM/cz

Site Area: +/- 0.74 acres

Living Units / LUE: Six (6) Living Units

Entitlement: P21-05568

Estimate Date: March 30, 2022

WATER CONNECTION CHARGES

	Service Area	Quantity	Units	Fee Rate	Amount Due	Notes
Water Service & Meter Charge	2"	2	EA.	$2,671.00	$5,342.00	[1] [6]
Irrigation Service & Meter Charge	1.5"	1	EA.	$2,508.00	$2,508.00	[1] [6]
Time & Materials Charge	4" Fire	1	EA.	$7,100.00	$7,100.00	[1] [6]
Frontage Charge		133	L.F.	$6.50	***previously satisfied***	
Water Capacity Fee	2"	1.60	EA.	$12,195.00	$19,512.00	[1] [6]
Water Capacity Fee	1.5"	1.00	EA.	$6,100.00	$6,100.00	[1] [6]

Total Water Connection Charges	**$40,562.00**	**[1]**

SEWER CONNECTION CHARGES

	Service Area	Quantity	Units	Fee Rate	Amount Due	Notes
House Branch Sewer Charge		[2]	EA	$0.00	[2]	[2]
Lateral Sewer Charge		13,300	Sq.Ft.	$0.10	***previously satisfied***	
Oversized Sewer Charge	UGM	13,300	Sq.Ft.	$0.05	***previously satisfied***	
Wastewater Facilities Charge		STEP		[3]	[3]	[4] [7]

Total Sewer Connection Charges	**$0.00**	**[3]**

CITYWIDE/REGIONAL IMPACT FEES

	Service Area	Quantity	Units	Fee Rate	Amount Due	Notes
Citywide Fire Facilities Impact Fee	Multi-Family	6	Units	$1,556.00	$9,336.00	[7]
Citywide Park Facility Impact Fee	Multi-Family	6	Units	$3,307.00	$19,842.00	[7] [9]
Citywide Police Facilities Impact Fee	Multi-Family	6	Units	$507.00	$3,042.00	[7]
Citywide Regional Street Charge	Office	0.74	AC	$16,390.00	$12,128.60	[6]
New Growth Area Major Street Charge	Office	0.74	AC	$41,162.00	$30,459.88	[6]
Citywide Traffic Signal Charge	Multi-Family	6	Units	$381.00	$2,286.00	[6]
Citywide Traffic Signal Charge	Restaurant	2,974	Sq.Ft.	$4,151.00	$12,345.07	[6]

Total Citywide/Regional Impact Fees	**$89,439.55**

Total Fees and Charges	***$130,001.55***

CITY OF FRESNO
DEVELOPMENT AND IMPACT FEE ESTIMATE

NOTES:

Within the City of Fresno's sphere of influence there are other sewer and water utility providers. If the project is within one of those districts, the developer must provide confirmation from the representitive Districts that all conditions for sewer and/or water connections and services have been satisfied, prior to issuance of a Building Permit.

Outside agencies developer impact fees: It is the developer's responsibility to contact those agencies for their fee estimates. These agencies include but are not limited to; Fresno County, Council of Fresno County Governments (FCOG), Fresno Metropolitan Flood Control District (FMFCD), various School Districts that serve the City of Fresno, etc.

NOTICE OF 90-DAY PROTEST PERIOD (GOVERNMENT CODE §66020(d)(1))
A protest filed pursuant to subdivision and/or development (a) shall be filed at the time of approval or conditional approval of the development or within 90 days after the date of the imposition of the fees, dedications, reservations, or other exactions to be imposed on a development project. Each local agency shall provide to the project applicant a notice in writing at the time of the approval of the project or at the time of the imposition of the fees, dedications, reservations, or other exactions, a statement of the amount of the fees or a description of the dedications, reservations, or other exactions, and notification that the 90-day approval period in which the applicant may protest has begun.

- The Board of Directors of the Fresno County Regional Transportation Mitigation Fee Agency approved Resolution No. 2009-01 requiring the payment of Regional Transportation Mitigation Fee. The effective date of this resolution is January 1, 2010. Please contact the Council of Fresno County Governments (FCOG) at (559) 233-4148 to determine this fee obligation. Confirmation by the FCOG is required before the City of Fresno can issue the Certificate of Occupancy.

- On December 8, 2016, Fresno City Council adopted Resolution No. 2016-258, effective July 1, 2018, administratively updating the impact fees adjusted by this resolution annually to the percentage change in the 20-City Construction Cost Index as reported in the Engineering News Record (ENR) for the 12-month period ending of May of the year of adjustment.

- Payment of Fresno Metropolitan Flood Control District (FMFCD) impact fees may be required. Please contact FMFCD at (559) 456-3292 to determine fee obligation.

- Payment of applicable school district fees is required prior to issuance of Building Permit. Please contact the respective school district to satisfy your fee obligation. Confirmation by the respective school district is required before the City of Fresno can issue building permits

[1] Fees for Water Service Connections and/or Meters, and Water Capacity due at time of development. Charges based on service and/or meter sizes, (Rates as established by the Master Fee Schedule), determined by the Developer.

[2] Sewer House branches to be installed by Developer at the Developer's cost.

[3] Upon occupancy of the project, the subdivider shall pay the appropriate sewer facility charge pursuant to the Simple Tiered Equity Program (STEP) as determined by the City of Fresno Department of Finance, Utilities Billing & Collection Division (559-621-6765).

[4] The Wastewater Facilities Charge (WWFC) is applicable to single family, duplex, and triplex developments. (FMC 6-302(i)); For Condominium conversions, WWFC may stay in the S.T.E.P. if the project continues to be master metered for water. If the condominiums are individually metered, the developer will pay the pro-rated portion of these fees.

[5] The Trunk Sewer Charge is applicable to single family, duplex, and triplex developments. (FMC 6-302(i)); For Condominium conversions, Trunk Sewer Charges may stay in the S.T.E.P. if the project continues to be master metered for water. If the condominiums are individually metered, the developer will pay the pro-rated portion of these fees.

[6] Due at Building Permit

[7] Due with Certificate of Occupancy

[8] Construction Fee Credits may be applicable. Contact the Public Works Engineering Services Division at (559) 621-8685 for more information.

[9] Parks fee applicable only to residential developments

[10] Fee not applicable on replacement or reconstruction of an existing structure that has been destroyed or demolished provided that the Building Permit for new construction is obtained within one year after the building is destroyed or demolished, and there is no change in the land use designation. (Res. Nos. 2005-428, 429)

[11] Subject to the acceptance date of the vesting tentative map, fee may not be applicable until 2-years after the date of Final Map recordation; when applicable, fee is due at Building Permit for all un-developed lots at the fee rate then in effect.

Prepared and Reviewed By: Frank Saburit **Date: March 30, 2022** **(559) 621-8797**

City of Fresno Public Works Department
Land Division & Engineering

2907 S. Maple Avenue
Fresno, California 93725-2208
Telephone: (559) 233-7161
Fax: (559) 233-8227

CONVEYANCE. COMMITMENT. CUSTOMER SERVICE.

April 13, 2022

Steven Lieng
City of Fresno
Development & Resource Management
2600 Fresno Street, Third Floor
Fresno, CA 93721-3604

RE: Conditional Use Permit Application No. P21-05568
S/W Herndon and Palm avenues

Dear Mr. Lieng:

The Fresno Irrigation District (FID) has reviewed the Conditional Use Permit Application No. P21-05568 for which the applicant proposes a three phase project, APN: 407-762-12. FID has the following comments:

1. FID does not own, operate or maintain any facilities located on the subject property, as shown on the attached FID exhibit map.

2. For informational purposes, FID's Bullard No. 124 runs southwesterly along the north side of Herndon Avenue, crosses the Ingram Avenue approximately 2,500 feet northeast of the subject property, crosses Palm Avenue approximately 1,500 feet north of the subject property, and crosses Fruit Avenue approximately 2,700 feet northwest of the subject property, as shown on the attached FID exhibit map. Should this project include any street and/or utility improvements along Herndon Avenue, Ingram Avenue, Palm Avenue, Fruit Avenue, or in the vicinity of the canal, FID requires it review and approval of all plans.

3. For informational purposes, FID's B-Main No. 124 runs southwesterly crosses Herndon Avenue approximately 3,000 feet northeast of the subject property, and crosses Sierra Avenue approximately 2,700 feet southeast of the subject property, as shown on the attached FID exhibit Map. Should this project include any street and/or utility improvements along Herndon Avenue, Sierra Avenue, or in the vicinity of this pipeline, FID requires it review and approve all plans.

BOARD OF DIRECTORS President RYAN JACOBSEN Vice-President JERRY PRIETO, JR. CHRISTOPHER WOOLF
GEORGE PORTER GREGORY BEBERIAN General Manager BILL STRETCH

Thank you for submitting this for our review. We appreciate the opportunity to review and comment on the subject documents for the proposed project. If you have any questions please feel free to contact Jeremy Landrith at 233-7161 extension 7407 or jlandrith@fresnoirrigation.com.

Sincerely,

Laurence Kimura, P.E.
Chief Engineer

Attachment

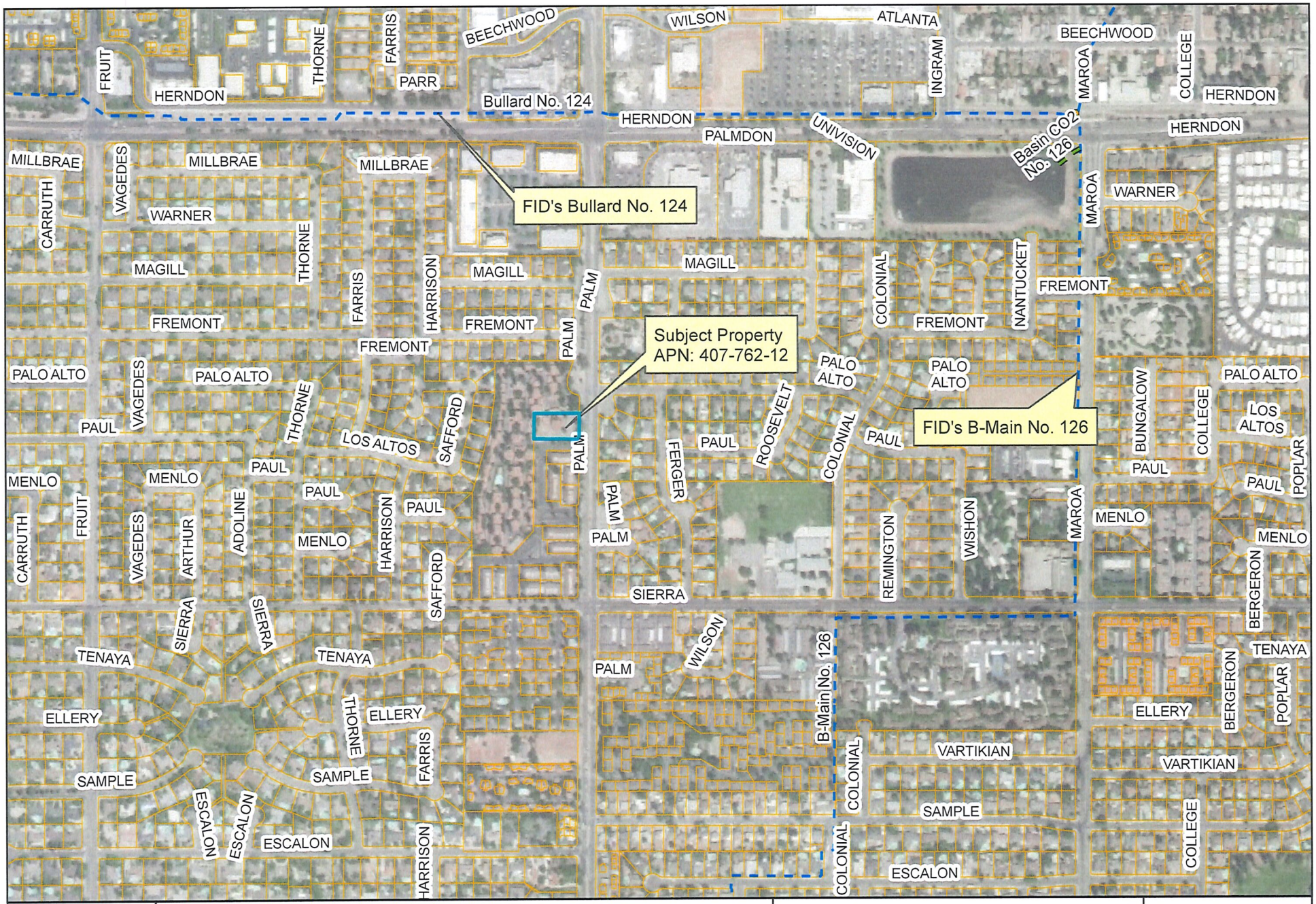

This map was produced by the Fresno Irrigation District and is provided for reference and informational purposes only and is not intended to show map scale accuracy or all inclusive map features, nor for legal purposes. FID makes no statements regarding the accuracy of this map as the features shown are in their approximate location. Please contact the FID Engineering Dept. at (559) 233-7161 for further information on FID facilities.

Path: G:\Fidgis\20220228 FID Master.mxd
Spatial Reference
Name: NAD 1983 StatePlane California IV FIPS 0404

Chris Lundeen

From: do_not_reply@fresno.gov
Sent: Wednesday, March 23, 2022 4:08 PM
To: Engineering Review
Subject: Planning Application P21-05568 - Task Assigned

Follow Up Flag: Follow up
Flag Status: Flagged

A task associated with Planning Application P21-05568 has been assigned for your review. You can review details online.

Application Description: Conditional Use Permit No. P21-05568 was filed by Stephanie Say of Paul Halajian Architects and pertains to the 0.74 acres located at 6545 North Palm Avenue. The applicant proposes a three phase project. Phase one consist of the rehabilitation of the existing historic Craycroft Home into a restaurant. Phase two proposes the construction of the private courtyard, public yard and proposed parking stalls, 10 for commercial tenants and 12 for residential with a total of 22 parking stalls. Phase three will consist of the construction of six multi-family residential units behind the existing house. The parcel is zoned O/UGM/cz (Office/Urban Growth Management/conditions of zoning)
Task Information: Irrigation District

Due 4/13

P21-05568 - CUP - Craycroft Home

A notice was added to this record on 2021-10-15.
Condition: Severity: Notice
Total conditions: 2 (Notice: 2)

View notice

Menu Help

File Date: 10/15/2021

Application Status: In Review

Application Type: Conditional Use Permit

Application Detail: Detail

Description of Work: Conditional Use Permit No. P21-05568 was filed by Stephanie Say of Paul Halajian Architects and pertains to the 0.74 acres located at 6545 North Palm Avenue. The applicant proposes a three phase project. Phase one consist of the rehabilitation of the existing historic Craycroft Home into a restaurant. Phase two proposes the construction of the private courtyard, public yard and proposed parking stalls, 10 for commercial tenants and 12 for residential with a total of 22 parking stalls. Phase three will consist of the construction of six multi-family residential units behind the existing house. The parcel is zoned O/UGM/cz (Office/Urban Growth Management/conditions of zoning)

Application Name: CUP - Craycroft Home

Address: 6545 N PALM AVE, FRESNO, CA 93704

Owner Name: ASSEMI REZA

Owner Address: 1677 W SHAW, FRESNO, CA 93711

Parcel No: 40776212

Contact Info:

Name	Organization Name	Contact Type	Status
Stephanie Say	Paul Halajian A...	Applicant	Active
ASSEMI REZA	ASSEMI REZA	Developer	Active

Licensed Professionals Info:

Primary	License Number	License Type	Name	Business Name	Business License #

Workflow Status:

Task	Assigned To	Status	Status Date	Action By
Application	Steven Lieng	Accept	03/22/2022	Steven Lieng
Pre-review- TIS	Jill Gormley	Content Suff...	10/26/2021	Leonor Ayala
Pre-review-Traffic	Louise Gilio	Content Suff...	10/26/2021	Leonor Ayala
Plan Distribution		Assign Revie...	03/23/2022	Cynthia Molina
Public Utilities Commi...				
Caltrans				
Public Works TIS Review	Jill Gormley			
Public Works Traffic P...	Louise Gilio			
Public Works (CFD)	Ann Lillie			
DPU Water Division	Robert Diaz	Review Complete	04/11/2022	Robert Diaz
DPU Planning and Engin...	Kevin Gray			
DPU Solid Waste Manage...	Kevin Gray			
Fire Review				
Police Review	Northwest PD			
Fresno County Environm...	Public Health			
Building and Safety Se...	Christian Mendez			
Airports	Airports	Review Complete	04/11/2022	Airports
Fresno Area Express	FAX	No Comment	04/04/2022	FAX

Task	Assigned To	Status	Status Date	Action By
County PW and Planning	County Planning			
Irrigation District	FID			
Flood Control District	FMFCD			
Air Pollution Control ...	SJVAPCD			
PGandE	PG&E			
School District	FUSD	Review Complete	03/25/2022	FUSD
Council District Commi...	Nicholas Caldera			
Council Member	District2			
US Postal Service	USPS			
Planner Review	Steven Lieng			
Public Works ROW Lands...	Hilary Kimber			
Long Range Planning	Long Range Plan...	No Comment	03/28/2022	Long Range Plan...
Historic Preservation	Alicia Gonzales			
Land Division	Frank Saburit	Review Complete	03/30/2022	Frank Saburit
Impact Fees				
Review Verification				
CEQA Review				
Planner Analysis and P...				
CEQA Publication				
NOD-NOE				
Closure				

Condition Status:

Name	Short Comments	Status	Apply Date	Severity	Action By
Airport Influence	This property is Airpo...	Applied	10/15/2021	Notice	Administrator
Historic Property	This property is desig...	Applied	10/15/2021	Notice	Administrator

Documents:

File Name	Document Group	Category	Description	Type	Document Status	Document Status Date

Show all

Initiated by Product: ACA

City of FRESNO

SUBJECT: Conditions of Approval for **P21-05568**

DATE: April 15, 2022

TO: Steven Lieng, Planner II
Planning and Development Department

FROM: Andreina Aguilar, Engineer II
Public Works Department, Traffic Planning Section

ADDRESS: **6545 North Palm Avenue**

APN: **407-762-12 & 407-750-XK**

ATTENTION:
Prior to resubmitting the corrected exhibit, provide the following information and conditions of approval on the site plan:

A. GENERAL REQUIREMENTS

1. **Assessor's Parcel Number (APN):** Provide APNs.
2. **Property Lines:** dimension existing/proposed property lines.
3. **Legal description:** Provide legal description.
4. **Required Notes:** Revise General Notes to include the required Public Works Department notes.
   a. Any survey monuments within the area of construction shall be preserved or reset by a person licensed to practice land surveying in the State of California.
   b. Repair all damaged and/or off-grade concrete street improvements as determined by the Construction Management Engineer, prior to occupancy.
   c. Two working days before commencing excavation operations within the street right-of way and/or utility easements, all existing underground facilities shall have been located by UNDERGROUND SERVICES ALERT (USA). CALL 1-800-642-2444
   d. The performance of any work within the public street right-of-way requires a street work permit prior to commencement of work. All required street improvements must be completed and accepted by the City prior to occupancy.
   e. All existing driveway approaches which no longer provide access to approved vehicle parking areas shall be removed unless otherwise approved by the City Engineer. Such areas shall be reconstructed with curb, gutter, and sidewalk to match existing adjacent street improvements. This work shall be completed and accepted before a Permit of Occupancy is issued or

the building is occupied per FMC 13-211.

f. Provide and maintain a 4' minimum path of travel along the public sidewalk directly in front of property, to meet current accessibility regulations. A pedestrian easement may be required if requirements are not met.
g. Contact the Public Works Department, Traffic Engineering at 559-621-8800, 10 working days prior to any offsite concrete construction.
h. All existing sidewalks in excess of 2% maximum cross slope must be brought into compliance prior to acceptance by Public Works.
i. All development shall take place in accordance with all city, county, state, federal, railroad laws and regulations.

B. OFFSITE INFORMATION:

1. **Public Street Improvements:**
    a. **Drive approaches**
    b. **Curb ramps**
    c. **Sidewalk drains**

C. ONSITE INFORMATION:

1. **State standard "STOP":** Identify and install a **30"** state standard "STOP" sign at the location shown. A "right turn only" sign is also required; install a **30" x 36"** state standard sign immediately below the stop sign on the same post. Signs shall be mounted on a **2"** galvanized post with the bottom of the lowest sign **7'** above ground, located behind curb and immediately behind a major street sidewalk.

PUBLIC IMPROVEMENT REQUIREMENTS

The following requirements are based on city records and the accuracy of the existing and proposed on-site and off-site conditions depicted on the exhibits submitted. Requirements not addressed due to omission or misrepresentation of information, on which this review process is dependent, will be imposed whenever such conditions are disclosed. Construct additional offsite improvements, including but not limited to, concrete curb, gutter, sidewalk, approaches, ramps, pavement, utility relocations, etc. in accordance with *City of Fresno's Public Works Standards, Specifications,* and the approved street plans.

Repair all damaged and/or off grade off-site concrete street improvements as determined by the City of Fresno Public Works Department, Construction Management Division, (559) 621-5600. Pedestrian paths of travel must also meet current accessibility regulations.

All existing sidewalks and trails in excess of 2% maximum cross slope must be brought into compliance **prior** to acceptance by Public Works.

The construction of any overhead, surface or sub-surface structures and appurtenances in the public right of way is prohibited unless an **Encroachment Covenant** is approved by the City of Fresno Public Works Department, Traffic and Engineering Services Division, (559) 621-8693. **Encroachment Covenant** must be approved **prior** to issuance of building permits.

Palm Avenue: 4-Lane Arterial
(Provide the following as notes on the site plan.)

1. Construction Requirements:
   a. Modify the northern drive approach as noted on **Exhibit "A"**, and install sidewalk, curb, gutter and paving per City of Fresno *Public Works Standards* **P-5 and P-48** to match existing or proposed street improvement line and grade per Fresno Municipal Code (FMC) 13-211.
   b. Construct a driveway approach to *Public Works Standards* **P-2** and **P-6,** as approved on the site plan. Construct permanent paving as needed per *Public Works Standard* **P-48.** Construct a concrete pedestrian walkway behind all driveway approaches as identified on **Exhibit "A"**.
   c. Planting of street trees shall conform to the minimum spacing guidelines as stated in the Standard Specification, Section 26-2.11(C).
   d. Modify or replace the existing ramp to meet current Public Works Standards, as determined by the Construction Management engineer prior to occupancy.
   e. Provide a **12**' visibility triangle at all driveways, per Fresno Municipal Code (FMC) 15-2018B.

The performance of any work within the public right of way and/or easements (including street, bike, pedestrian, landscape, and utility easements) requires a **Street Work Permit prior** to commencement of work. Contact Public Works Department at (559) 621-8800, 10 working days prior to construction of any improvements in the public right-of-way and/or easements. All improvements shall be constructed in accordance with the City of Fresno, *Public Works Department Standard Drawings and Specifications*. Traffic Control Plans shall be required to ensure the sidewalk, or an approved accessible path remains open during construction. Contact Melessa Avakian at (559) 621-8812 or at Melessa.Avakian@fresno.gov and submit Traffic Control Plans to the Traffic Operations and Planning Division. All work shall be reviewed, approved, completed, and accepted **prior** to obtaining a certificate of occupancy.

Two working days before commencing excavation operations within the street right of way and/or utility easements, all existing underground facilities shall have been located by Underground Services Alert (USA) Call 811.

Any survey monuments within the area of construction shall be preserved or reset by a person licensed to practice Land Surveying in the State of California.

PRIVATE IMPROVEMENT REQUIREMENTS

Off-Street Parking Facilities and Geometrics:

Contact the Planning and Development Department for review and approval of onsite parking. The parking lot is required to meet the *City of Fresno's Parking Manual, Public Works Standards (P-21, P-22, and P-23) and Specifications*. Parking must also comply with the *California Building Code's* accessibility requirements and the Fire and Solid Waste Department's minimum turning templates.

Provide corrections as noted on **Exhibit "A".**

Traffic Signal Mitigation Impact (TSMI) Fee: This project shall pay all applicable TSMI Fees **at the time of building permit.** Contact the Public Works Department, Frank Saburit at (559)621-8797. The fees are based on the Master fee schedule.

Fresno Major Street Impact (FMSI) Fees: This entitlement is in the **New Growth Area**; therefore pay all applicable growth area fees and citywide regional street impact fees. Contact the Public Works Department, Frank Saburit at (559) 621-8797.

Regional Transportation Mitigation Fee (RTMF): Pay all applicable **RTMF** fees to the Joint Powers Agency located at 2035 Tulare Street, Suite 201, Fresno, CA 93721; (559) 233-4148 ext. 200; www.fresnocog.org. Provide proof of payment or exemption **prior** to issuance of certificate of occupancy.

In order to obtain street or building permit approval from the Public Works Department, an approval stamp with a signature from Traffic Planning is required on the site plan and inserted in the building sets.

Questions relative to these conditions may be directed to Andreina Aguilar (559) 621-8674 Andreina.Aguilar@fresno.gov in the Public Works Department, Traffic Planning Section.

City of Fresno General Notes

City of Fresno Notes and Requirements for Entitlement Applications

GENERAL

1) Approval of this special permit may become null and void in the event that development is not completed in accordance with all the conditions and requirements imposed on this special permit, the Citywide Development Code, and all Public Works Standards and Specifications. This special permit is granted, and the conditions imposed, based upon the Operational Statement provided by the applicant. The Operational Statement is material to the issuance of this special permit. Unless the conditions of approval specifically require operation inconsistent with the Operational Statement, a new or revised special permit is required if the operation of this establishment changes or becomes inconsistent with the Operational Statement. Failure to operate in accordance with the conditions and requirements imposed may result in revocation of the special permit or any other enforcement remedy available under the law. The Planning and Development Department shall not assume responsibility for any deletions or omissions resulting from the special permit review process or for additions or alterations to construction plans not specifically submitted and reviewed and approved pursuant to this special permit or subsequent amendments or revisions.

2) Approval of this special permit shall be considered null and void in the event of failure by the applicant and/or the authorized representative, architect, engineer, or designer to disclose and delineate all facts and information relating to the subject property and the proposed development including, but not limited to, the following:

a) All existing and proposed improvements including but not limited to buildings and structures, signs and their uses, trees, walls, driveways, outdoor storage, and open land use areas on the subject property and all of the preceding which are located on adjoining property and may encroach on the subject property.

b) All public and private easements, rights-of-way and any actual or potential prescriptive easements or uses of the subject property; and,

c) Existing and proposed grade differentials between the subject property and adjoining property zoned or planned for residential use.

3) No land shall be used, and no structure shall be constructed, occupied, enlarged, altered, demolished, or moved in any zoning district, except in accordance with the provisions of this Code, Specific uses of land, buildings, and structures listed as prohibited in any zoning district are hereby declared to be detrimental to the public health, safety, and welfare.

4) Development shall take place in accordance with the Standards, Specifications, and Standard Drawings of the City of Fresno Public Works Department; https://www.fresno.gov/publicworks/wpcontent/uploads/sites/17/2016/09/CityofFresnoStandardSpecifications2016January.pdf

5) Development shall take place in accordance with all city, county, state and federal laws and regulations.

6) Owners and persons having ownership interest in businesses operating in the City of Fresno are required by the Fresno Municipal Code to obtain a Business Tax Certificate. Contact the City of Fresno Finance Department's Business Tax Division at (559) 621-6880 for more information. Information and an application form are available at the following website: http://www.fresno.gov/Government/DepartmentDirectory/Finance/BusinessLicenseandTax/businesstaxapplicaiton.htm

7) All proposed building(s) or structure(s) constructed on the property must comply with the prevailing California Building Code Standards.

8) Any building modifications and/or additions not included with this application are not approved with this special permit and would be subject to a new special permit.

9) A permit granted under the Fresno Municipal Code shall automatically expire if it is not exercised or extended within three years of its issuance. Refer to Section 15-5013, Expiration of Planning Entitlements, for more information about the exercise of rights.

FENCES/WALLS, LANDSCAPING, PARKING

10) Nothing in this Development Code shall be deemed to prohibit the erection of temporary fencing around construction sites in compliance with the Building Code and other applicable provisions of the Fresno Municipal Code.

11) Future fences shall be reviewed and approved by the Planning and Development Department prior to installation.

12) Fences, hedges, and walls shall be maintained in good repair, including painting, if required, and shall be kept free of litter or advertising. Where hedges are used as screening, trimming or pruning shall be employed as necessary to maintain the maximum allowed height. Fences shall be maintained and shall stand upright and shall not lean.

13) All planting and other landscape elements shall be permanently maintained in good growing condition. Such maintenance shall include, where appropriate, pruning, mowing, weeding, cleaning, fertilizing, and regular watering. Wherever necessary, plantings shall be replaced with other plant materials to insure continued compliance with applicable landscaping requirements. Yards shall be maintained free of refuse, debris, rubbish, or other accumulated matter and/or materials, and shall be maintained clean. Grass shall not exceed six inches in height.

14) New landscaping shall have an automatic irrigation system designed to provide adequate and efficient coverage of all plant material. Irrigation systems shall comply with the requirements of the California Green Building Standards Code and/or the California Model Water Efficient Landscape Ordinance and/or the California Plumbing Code as may be amended.

15) Trees shall be maintained by property owners to be free from physical damage or injuring arising from lack of water, chemical damage, accidents, vandalism, insects, and disease. Any tree showing such damage shall be replaced with another tree.

16) No tree for which a Tree Removal Permit is required shall be removed until all conditions of the permit have been satisfied and the decision has become final. In addition, tree(s) approved for removal in conjunction with a development application shall not be removed before the issuance of a Building Permit or unless all of the conditions of approval of the development applications are satisfied.

17) The review authority shall issue a Tree Removal Permit if any of the following general criteria is met:

a) The tree(s) is irreparably diseased or presents a danger of falling that cannot be controlled or remedied through reasonable preservation and/or preventative procedures and practices so that the public health or safety requires its removal.

b) The tree(s) can potentially cause substantial damage to existing or proposed main structure(s) (e.g, dwellings, other main structures, or public infrastructure) or interfere with utility services and cannot be controlled or remedied through reasonable relocation or modification of the structure or utility services. c) The retention of the tree(s) restricts the economic enjoyment of the property or creates an unusual hardship for the property owner by severely limiting the use of the property in a manner not typically experienced by owners of similarly zoned and situated properties, and the applicant has demonstrated to the satisfaction of the Review Authority that there are no reasonable alternatives to preserve the tree(s).

18) Landscaping must be in place before issuance of the certificate of occupancy. A Hold on Occupancy shall be placed on the proposed development until such time that landscaping has been approved and verified for proper installation by the Current Planning Division.

19) Future tenant improvements shall be reviewed and approved by the Planning and Development Department to ensure that adequate off-street parking is provided,

20) Trees required for parking lots are in addition to trees required elsewhere on the site as prescribed in other sections of the Fresno Municipal Code.

21) Parking lots, including landscaped areas, driveways, and loading areas, shall be maintained free of refuse, debris, or other accumulated matter and shall be kept in good repair at all times.

22) A minimum number of accessible parking stalls are required for the proposed project per State of California Building Code.

APPL. NO. P21-05568 EXHIBIT A-1 DATE 03/23/2022

PLANNING REVI

TRAFFIC ENG.

APPROVED BY

MAKE CORRECTIONS PER TRAFFIC ENGR.
REVIEW: #1
REVIEWED BY: AA
DATE: 04 / 15 / 2022

CITY OF FRESNO DARM DEPT

City of Fresno General Notes (cont'd)

23) All accessible stalls shall be marked with the international symbol of spaces and a warning that vehicles in violation of Section 10-1017 of the Fresno Municipal Code shall be towed away. The international symbol and tow-away warning shall be posted conspicuously on seven-foot poles.

24) Applicants are encouraged to provide shared vehicle and pedestrian access between adjacent properties for convenience, safety, and efficient circulation. A joint access covenant shall be required.

25) All general standards of Section 15-2015 of the Fresno Municipal Code shall apply when lighting is provided to illuminate parking, sales or display areas. Depict all proposed lights on the site plan.

26) Bicycle parking spaces shall be supplied according to Table 15-2429-D: Required OnSite Bicycle Parking Spaces of the Fresno Municipal Code. Each bicycle parking space shall be a minimum of 30 inches in width and eight feet in length and shall be accessible without moving another bicycle. At least 30 inches of clearance shall be provided between bicycle parking spaces and adjacent walls, poles, landscaping, street furniture, drive aisles, and pedestrian ways and at least five feet from vehicle parking spaces to allow for the maneuvering of bikes. Overhead clearance shall be a minimum of seven feet. A minimum five foot aisle between each row of bicycle parking shall be provided for bicycle maneuvering beside or between each row, when multiple rows are proposed. Bicycle parking spaces shall not encroach into pedestrian ways, landscaped areas, or other required open spaces, and shall be located proximal to structures.

27) All general provisions of Section 15-2403 of the Fresno Municipal Code shall apply to all parking areas.

28)The parking lot is required to meet the City of Fresno's Parking Manual, Public Works Standards (P-21, P-22, and P-23) and Specifications (https://www.fresno.gov/publicworks/wp-content/uploads/sites/17/2016/09/ParkingManual.pdf). Parking must also comply with the California Building Code's accessibility requirements and the Fire and Solid Waste Department's minimum turning templates. Contact the Planning and Development Department for Parking Manual questions.

SIGNAGE

29) All future signs shall be architecturally compatible with the proposed building(s). Provide a set of drawings, with descriptive information, including, materials, design and colors to allow for a preliminary assessment of the future signage. It is recommended that you provide a copy of the signage early in the project process to allow for staff comment.

30) Signs, other than directional signs, if applicable, are not approved for installation as part of this special permit.

31) All proposed signs shall conform to the current sign ordinance. The submittal checklist for signs is available online at https://www.fresno.gov/darm/planningdevelopment/applications-forms-fees/#tab-14

32) Window signs limited to the hours of operation, address, occupancy, and emergency information, subject to the following standards:

a) Operational windows signs shall not be mounted or placed on windows higher than the second story.

b) The maximum area of exempt window signage shall not exceed three square feet in area.

33) Banners, streamers, moving signs, and inflatables (including air dancers, balloons, and similar objects) are allowed subject to Temporary Use Permit approval for establishments within Non-Residential Districts. Signs of this type do not count toward total maximum sign area. No sign per this section shall be displayed for more than 30 days, and a period of 30 days must lapse before displaying another sign. Signs shall not be displayed for more than 60 total days during a calendar year.

34) Every sign displayed within the city, including exempt signs, shall be maintained in good physical condition and shall comply with adopted regulations. All defective or broken parts shall be replaced. Exposed surfaces shall be kept clean, in good repair, and painted where paint is required.

MISCELLANEOUS

35) Noise levels shall not exceed the decibel levels described in Section 15-2506 of the FMC at anytime, measured at the nearest subject property line.

36) No vibration shall be produced that is transmitted through the ground and is discernible without the aid of instruments by a reasonable person at the lot lines of the site. Vibrations from temporary construction, demolition, and vehicles that enter and leave the subject parcel (e.g., construction equipment, trains, trucks, etc.) are exempt from this standard.

37) Lights shall be placed to deflect light away from adjacent properties and public streets, and to prevent adverse interference with the normal operation or enjoyment of surrounding properties. Direct or sky-reflected glare from floodlights shall not be directed into any other property or street. Except for public street lights and stadium lights, no light, combination of lights, or activity shall cast light onto a residentially zoned property, or any property containing residential uses, exceeding one-half footcandle.

38) No use shall be operated such that significant, direct glare, incidental to the operation of the use is visible beyond the boundaries of the lot where the use is located. Windows shall not cause glare that may disrupt adjoining properties, traffic on adjacent streets, etc. Glare or heat reflected from building materials shall be mitigated so as to not disrupt surrounding properties.

39) The address listed in the conditions of approval is the 'Official Address' given to the building. If you would like separate suite or unit numbers for a building, provide a floor plan and contact the City of Fresno Planning and Development Department for 'Official Addresses'. Only those addresses assigned by the City of Fresno will be recognized as 'Official Addresses'. The United States Post Office will only recognize addresses assigned by the City of Fresno. If a non-official address is given to a building and or/separate suites, the City of Fresno has the authority to charge a fee and have those addresses corrected. In addition, the United States Post Office will cease mail delivery to those addresses that are not 'Official Addresses'.

40) All projects, including projects that involve less than one acre of property, are required to comply with the City of Fresno's Urban Storm Water Quality Management and Discharge Control Ordinance, Fresno Municipal Code (FMC) Chapter 6, Article 7 (FMC Sections 6-701 et seq.) When a project involves one acre or more of construction activity (including, but not limited to, grading) the developer is required to obtain a stormwater discharge permit for construction, with a Notice of Intent (NOI) filed prior to commencement of any grading construction activity. Contact the Fresno office of the California Regional Water Quality Control Board at (559) 445-6281 regarding the required NOI and stormwater discharge permit. Additional information on California's construction stormwater regulation may be obtained from the Water Board via the internet: www.waterboards.ca.gov/water_issues/programs/stormwater/construction.shtml. Helpful information for preparing and implementing stormwater pollution prevention plans may also be obtained from the California Stormwater Quality Association via its website, www.casqa.org. When a project involves specified nonresidential activities (certain commercial and industrial activities), an ongoing industrial stormwater discharge permit is also required. Contact the Fresno office of the California Regional Water Quality Control Board at (559) 445-6281 to find out whether your project/business requires an industrial stormwater discharge permit, and to obtain details on securing this permit. Additional information on industrial stormwater regulations may be obtained from the following website: www.waterboards.ca.gov/water_issues/programs/stormwater/industrial.shtml, The California Stormwater Quality Association has additional information on preparing stormwater pollution prevention plans for industrial activities (www.casqa.org).

41) Screen all roof-mounted equipment from the view of public rights-of-way. Depict all mechanical equipment on site plan and elevations.

42) If archaeological and/or animal fossil material is encountered during project surveying, grading, excavating, or construction, work shall stop immediately.

43) If there are suspected human remains, the Fresno County Coroner shall be immediately contacted. If the remains or other archaeological material is possibly Native American in origin, the Native American Heritage Commission (Phone: (916) 653-4082) shall be immediately contacted, and the California Archaeological Inventory/Southern San Joaquin Valley Information Center (Phone: (805) 644-2289) shall be contacted to obtain a referral list of recognized archaeologists. An archeological assessment shall be conducted for the project, the site shall be formally recorded, and recommendations made to the City as to any further site investigation or site avoidance/preservation.

City of Fresno General Notes (cont'd)

44) If animal fossils are uncovered, the Museum of Paleontology, U.C. Berkeley shall be contacted to obtain a referral list of recognized paleontologists. An assessment shall be conducted by a paleontologist and, if the paleontologist determines the material to be significant, it shall be preserved.

45) Connection to a municipal water system is required unless approved measures are included in the project conditions of approval for an alternative water supply.

46) Connection to a municipal City of Fresno sewer system is required unless approved measures are included in the project conditions for alternative wastewater treatment facilities.

47) City of Fresno water and sewer connection charge obligations applicable to this project will be computed during the building construction plan check process and shall be payable at time of issuance of building permit unless other arrangements have been approved to defer such payments to a later date. For information relating to water and sewer service requirements and connection charges, contact Frank Saburit at (559) 621-8797.

48) Open street cuts are not permitted; all utility connections must be bored.

49) CROSS-CONNECTION CONTROL. A backflow prevention device may be required on the water service. Contact the Department of Public Utilities, Water Division (559) 621-5300 for requirements relating to approved devices, locations, testing and acceptance. This requirement must be satisfied prior to final occupancy.

50) This project was reviewed by the Fire Department only for requirements related to water supply, fire hydrants, and fire apparatus access to the building(s) on site. Review for compliance with fire and life safety requirements for the building interior and its intended use are reviewed by both the Fire Department and the Building and Safety Section of the Planning and Development Department when a submittal for building plan review is made as required by the California Building Code by the architect or engineer of record for the building.

51) Open storage (outside an enclosed building) shall be limited to vehicles, boats, recreational vehicles, and trailers. Outdoor storages areas shall be screened from public view by building façades or solid fences. At the discretion of the Review Authority, the treatment of the ground surface of the open storage area may be gravel or other materials as prescribed by the San Joaquin Valley Air Pollution Control District, the Public Works Department, the Fire Department, and the Fresno Metropolitan Flood Control District. All open storage must be depicted on the site plan and described in operation. If it is not, it is not allowed on the site.

52) If video surveillance cameras are required or installed, provide signs under the surveillance cameras which notify the public that the subject property is monitored by video surveillance.

FEES

53) NOTICE TO PROJECT APPLICANT: In accordance with the provisions of Government Code Section 66020(d)(1), the imposition of fees, dedication, reservations or exactions for this project are subject to protest by the project applicant at the time of approval or conditional approval of the development or within 90 days after the date of imposition of fees, dedications, reservation, or exactions imposed on the development project. This notice does not apply to those fees, dedications, reservations, or exactions which were previously imposed and duly noticed; or, where no notice was previously required under the provisions of Government Code Section 66020(d)(1) in effect before January 1, 1997.

54) CITYWIDE DEVELOPMENT IMPACT FEES

a) Traffic Signal Charge (FMC Section 12-4.1101 to 12-4.1103) This project shall pay its Traffic Signal Mitigation Impact Fee at the time of building permit based on the trip generation rate(s) as set forth in the latest edition of the Master Fee Schedule. Refer to the adopted Master Fee Schedule for fee rate. This fee shall be paid at time of building permit.

b) Fire Facilities Fee (FMC Section 12-4.901 to 12-4.906) (based on building square footage, or residential units)

c) Police Facilities Fee (FMC Section 12-4.801 to 12-4.806) (based on building square footage, or residential units)

d) Parks Facilities Fee (FMC Section 12-4.701 to 12-4.706) (based on the number of residential units)

55) CITYWIDE REGIONAL AND NEW GROWTH MAJOR STREET IMPACT FEES (FMC Section 12-4.1006)

a) Street Impact Fees shall be due and payable at the time of building permit issuance unless otherwise required by State law.

b) Street Impact Fees will be a condition on all development entitlements granted.

56) FRESNO COUNTY FACILITY IMPACT FEE -- Fresno County adopted a Facilities Impact Fee, but the requirement to pay this fee was subsequently suspended by Fresno County. If the fee has been reinstated at the time of issuance of building permits for this project, or an alternative fee system has been adopted by Fresno County, proof of payment or payment of this fee will be required for issuance of building permits.

57) REGIONAL TRANSPORTATION MITIGATION FEE (RTMF) -- Pay the RTMF fee to the Joint Powers Agency located at 2035 Tulare Street, Suite 201, Fresno, CA 93721; (559) 233-4148, ext. 200; www.fresnocog.org. The RTMF form shall be signed by a Building and Safety Services staff member prior to issuance of building permits. Proof of payment shall be provided prior to issuance of occupancy.

58) SCHOOL FEES -- School fees must be paid, if required, prior to the issuance of building permits. Contact the applicable school district to obtain fee amount. Provide proof of payment (or no fee required) prior to the issuance of building permits.

59) FRESNO METROPOLITAN FLOOD CONTROL DISTRICT (FMFCD) FEES

a) A FMFCD Development Fee is required for review of proposed development projects, including applications for plan amendments, rezones, special permits, subdivisions, and grading plans. This fee is based on project acreage and must be paid directly to FMFCD in order for that agency to review projects and provide a Notice of Requirements. For more information, contact the FMFCD at (559) 456-3292.

b) FMFCD drainage fees are due, if required, prior to issuance of building permits and are payable at the rate in place at the time of building permit issuance. Unpaid drainage fee obligations that were unpaid for a prior project at the site of a new project must be satisfied by the developer of the new project. Drainage fees may be paid at the Planning and Development Department prior to, or at the time of building permit issuance. They may also be paid directly to FMFCD, and proof of payment provided to the City, in order to obtain construction permits.

60) SEWER CONNECTION CHARGES (FMC Section 6-304(a)). The following sewer connection charges may be required and will be payable at the fee rate listed in the Master Fee Schedule at the time payment is due. New sewer connection charges adopted by the Council prior to the issuance of building permits may also be applied.

a) Lateral Sewer Charge (based on property frontage to a depth of 100')

b) Oversize Sewer Charge (based on property frontage to a depth of 100')

c) Wastewater Facilities Charge

d) Trunk Sewer Charge

Effective January 9, 1999, Ordinance No. 98-97 also amended certain sewer connection charges. Fresno Municipal Code Article 15, Section 12 provides property owners the incentives and deletes certain sewer connection charges pursuant to the Simple Tiered Equity Program (STEP) and the Employment Development Program (EDP). For additional information on the STEP and EDP, contact the Department of Public Utilities, Wastewater Division - Environmental Services Section at (559) 621-5153.

61) WATER CONNECTION CHARGES: (FMC Sections 6-501 to 6-507). The following water connection charges may be required and will be payable at the fee rate listed in the Master Fee Schedule at the time payment is due. New water connection charges adopted by the Council prior to issuance of building permits may also be applied.

a) Frontage Charge (based on property frontage)

b) Service Charges (based on service size required by applicant)

c) Meter Charges (based on service need)

d) Water Capacity fee (based on size of meter)

City of Fresno General Notes (cont'd)

62. Deferment of the payment of Citywide development impact fees for Fire, Police, Parks, Streets, and Traffic Signals is available for projects located within the Downtown Priority Areas in accordance with the provisions of City of Fresno Resolutions Nos. 2009-265 and 2010-19.

PUBLIC WORKS DEPARTMENT GENERAL NOTES

63) Any survey monuments within the area of construction shall be preserved or reset by a person licensed to practice land surveying in the State of California.

64) Repair all damaged and/or off-grade concrete street improvements as determined by the Construction Management Engineer, prior to occupancy.

65) Two working days before commencing excavation operations within the street right-ofway and/or utility easements, all existing under-ground facilities shall have been located by underground services.

66) The performance of any work within the public street right-of-way requires a street work permit prior to commencement of work. All required street improvements must be completed and accepted by the City prior to occupancy.

67) Contact the Public Works Department, Traffic Engineering at (559) 621-8800, 10 working days prior to any offsite concrete construction.

68) For Standard Drawings visit https://www.fresno.gov/publicworks/wpcontent/uploads/sites/17/2016/09/CityofFresnoStandardDrawings2016Feb.pdf

69) For Traffic Planning's website with useful links, additional notes, sample of legend, Parking Manual and Traffic Study Checklist visit https://www.fresno.gov/publicworks/traffic-engineering/#tab-2

70) Traffic Planning Checklist link: https://www.fresno.gov/publicworks/wpcontent/uploads/sites/17/2019/04/Traffic-Planning-Checklist-04-19.pdf

71) For Traffic Study questions please contact Jill Gormley at (559) 621-8792 or via email at Jill.Gormley@fresno.gov.

ADD ANY MISSING NOTES LISTED IN THE CONDITIONS OF APPROVAL

Parking Summary

Parking [per FMC 15-2409]

See Proposed Site Plan on A3 for locations

Use		Required	Provided
Residential	Residents	6 stalls	12 stalls
	Guests	4 stalls	4 stalls
Commercial		0 stalls [see FMC 15-2412-A]	6 stalls (1 per 200 sf)

ADA Parking [per CBC Table 11B-208.2]

See Site Plan on A3 for locations.

For calculating required number of accessible stalls, electric vehicle charging stalls do not count. [11B-208.1]

For 1-25 standard stalls, 1 accessible stall required. [Table 11B-208.2]

For residential facilities, where at least one stall is provided per unit, at least one accessible stall shall be provided for each dwelling unit required to provide mobility features. Where less than one stall is provided per unit, comply with Table 208.2.

12 stalls provided, 2 of which is designated as current or future EV charging = 10 standard stalls provided.

One in every six accessible stalls, but not less than one shall be van accessible. [11B-208.2.4]

Use	Required	Provided
Residential	1 stall	1 stall
Commercial	1 stall	1 stall

Electric Vehicle Charging Spaces [per CalGreen 4.106.4.2]

See Site Plan on A3 for locations.

10% of total number of parking spaces shall be future EV charging.

Use	Required	Provided
Residential	1.2 stalls	2 stalls
Commercial	1 stall	1 stall

Bicycle Parking [per FMC Table 15-2429-D and CalGreen 5.106.4.1]

See Site Plan on A3 for locations

Residential Uses:

Required	Provided
Short term stalls not required if less than 15 dwelling units provided	0 stalls provided, OK
Long term stalls not required if less than 15 dwelling units provided	0 stalls provided, OK

Commercial Uses:

Required	Provided
Provide 5% of total new parking spaces as short term bicycle parking, or (1) 2-capacity rack min.	2 stalls provided, OK
Long term stalls not required if less than 10 tenant-occupants, (+/- 4 employees proposed)	0 stalls provided, OK

PAUL HALAJIAN
ARCHITECTS
389 Clovis Ave, Suite 100
Clovis, CA 93612-1185
T: 559.297.7900 F: 559.297.7950
www.halajianarch.com

LICENSED ARCHITECT
NOT FOR CONSTRUCTION
STATE OF CALIFORNIA

PAUL HALAJIAN ARCHITECTS expressly reserves its common law copyright and other property rights specifically related to the contents of these plans. This document and the ideas and designs incorporated herein, as an instrument of professional service rendered by PAUL HALAJIAN ARCHITECTS, is not to be used in whole or in part for any other project without prior written authorization from PAUL HALAJIAN ARCHITECTS.

PROJECT:
Reza Assemi
Site Development
6545 North Palm Avenue, Fresno, CA 93704

SHEET: General Notes

DRAWING SET INFORMATION:

12.02.2021	DP Submittal

REVISIONS:

PROJECT NUMBER:
2017-34

SHEET NUMBER:
A1

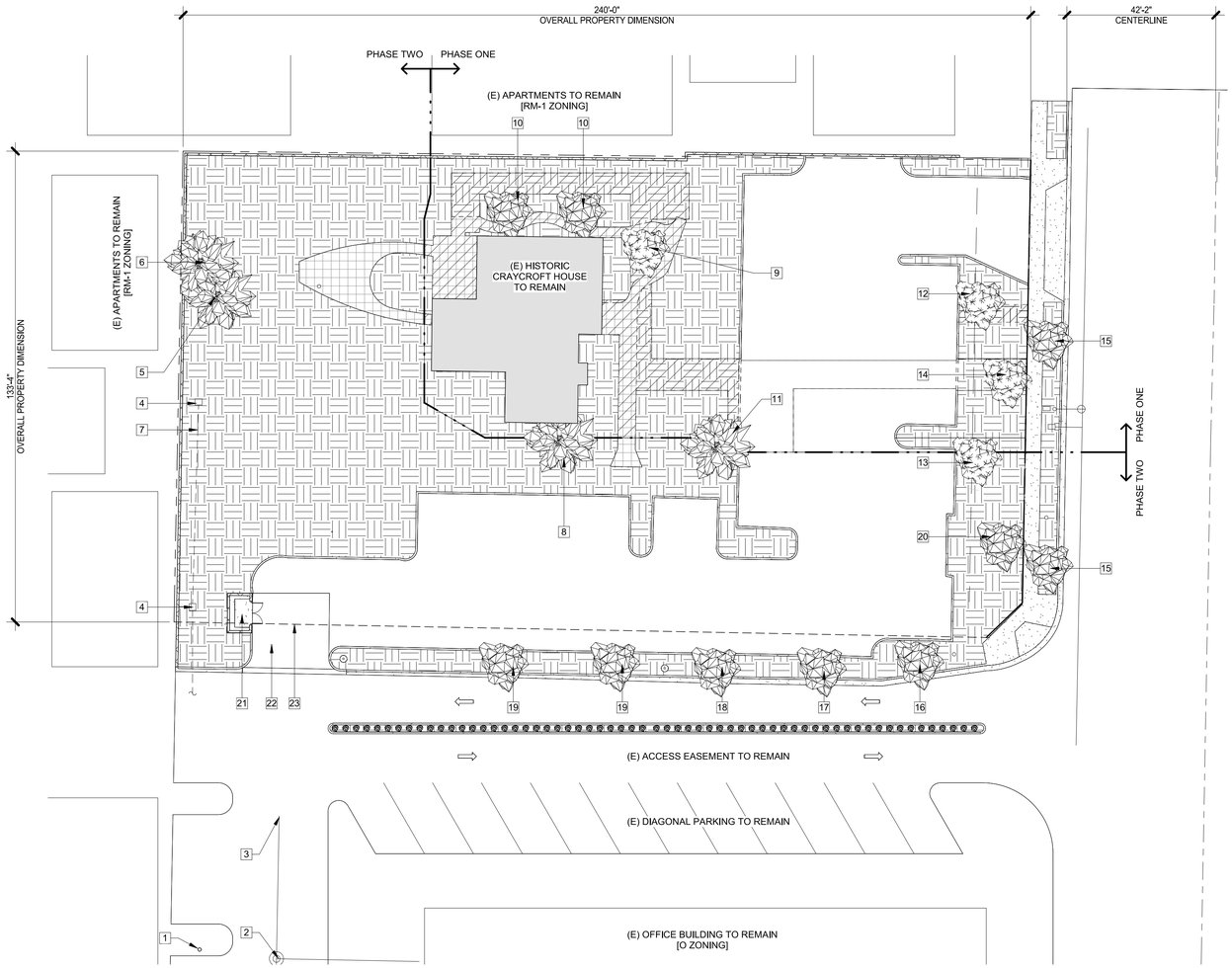

1 Demo Site Plan
1" = 20'-0"

General Notes

1) Keynotes apply to this sheet only.

2) Items shown but not noted are to be considered existing to remain, typ. u.n.o.

3) Field verify all (E) conditions prior to commencing demolition work.

4) Protect all (E) underground utilities, unless noted as a part of the scope of work.

5) Two (2) working days before commencing excavation operations within the street right-of-way and/or utility easements, all existing underground facilities shall be located by Underground Services Alert (USA). Call (800) 642-2444.

Keynotes

1 (E) private fire hydrant 140' south in commercial parking lot
2 (E) manhole to remain
3 (E) sewer line to remain, assumed to feed subject property.
4 (E) drain inlet to remain, see forthcoming Civil drawings for proposed grading plan
5 Remove (E) 26" palm tree, salvage for Owner.
6 Remove (E) 24" palm tree, salvage for Owner.
7 Thin dashed line indicates assumed storm drain line underground, V.I.F.
8 Remove (E) 18" palm tree, salvage for Owner.
9 Remove (E) 6" laurel tree
10 (E) 11" orange tree to remain
11 (E) 42" palm tree to remain
12 Remove (E) 25" poplar tree
13 Remove (E) 18" poplar tree
14 (E) 18" poplar tree to remain
15 (E) 8" gingko bilboa tree to remain
16 (E) 19" poplar tree to remain
17 (E) 12" poplar tree to remain
18 (E) 14" poplar tree to remain
19 (E) 13" poplar tree to remain
20 (E) 16" poplar tree to remain
21 (E) CMU block trash enclosure to remain
22 (E) asphalt drive aisle to remain to provide access to (E) trash enclosure
23 (E) property line to be adjusted through LLA (lot line adjustment), in progress. See proposed plan for new location.

APPL. NO. P21-05568 EXHIBIT A-2 DATE 03/23/2022
PLANNING REVIEW BY _____ DATE _____
TRAFFIC ENG. _____ DATE _____
APPROVED BY _____ DATE _____
CITY OF FRESNO DARM DEPT

PAUL HALAJIAN
ARCHITECTS
389 Clovis Ave, Suite 100
Clovis, CA 93612-1185
T: 559.297.7900 F: 559.297.7950
www.halajianarch.com

LICENSED ARCHITECT
NOT FOR CONSTRUCTION
STATE OF CALIFORNIA

PAUL HALAJIAN ARCHITECTS expressly reserves its common law copyright and other property rights specifically related to the contents of these plans. This document and the ideas and designs incorporated herein, as an instrument of professional service rendered by PAUL HALAJIAN ARCHITECTS, is not to be used in whole or in part for any other project without prior written authorization from PAUL HALAJIAN ARCHITECTS.

PROJECT:
Reza Assemi Site Development
6545 North Palm Avenue, Fresno, CA 93704

SHEET: Demo Site Plan

DRAWING SET INFORMATION:

12.02.2021	DP Submittal

REVISIONS:

PROJECT NUMBER:
2017-34

SHEET NUMBER:
A2

Vicinity Map

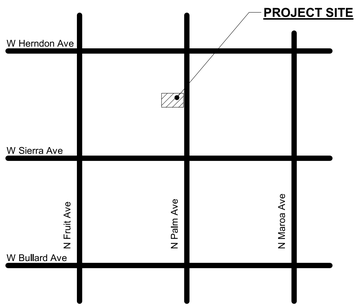

Project Information

OWNER/BUILDER:
Reza Assemi

559-260-6006

rezaassemi@hotmail.com

ARCHITECT:
Paul Halajian Architects
389 Clovis Avenue, Suite 100
Clovis, CA 93612

Contact: Stephanie Say
559-297-7900

stephanies@halajianarch.com

Project Description

Project includes phased site development for the rehabilitation of a historic building and addition of new construction apartment units.

Phase one includes rehabilitation of the historic Craycroft home and immediate site improvements to include upgraded path of travel, new parking, and trash enclosure. The occupancy will be changed from assumed R-3 to B, to facilitate a future tenant improvement for a restaurant/speakeasy within the historic house. Structural upgrades will be included as required.

Phase two includes full buildout of the site, including the addition of (6) new apartment units, additional parking stalls, and fenced courtyard area.

Site Information

APN: 407-762-12

General Plan Designation O - Office

Zoning Designation O - Office

	Existing	Proposed
Project Site Area (Net)	30,226 sf (0.69 acres)	33,082 sf (0.76 acres)
Project Site Area (Gross)	32,207 sf (0.74 acres)	35,079 sf (0.81 acres)
Existing Building Area	1,864 sf footprint	1,864 sf footprint
Proposed Building Area	-	6,233 sf footprint
Building Coverage	6%	23%
Paved Area	12,755 sf	14,719 sf
Landscaped Area	16,167 sf	12,263 sf

(LLA in progress)

APPL. NO. P21-05568 EXHIBIT A-3 DATE 03/23/2022

PLANNING R

TRAFFIC ENG

APPROVED B

MAKE CORRECTIONS PER TRAFFIC ENGR. REVIEW: #1
REVIEWED BY: AA
DATE: 04 / 15 / 2022

CITY OF FRESNO DARM DEPT

General Notes

1) Keynotes apply to this sheet only.

2) Items shown but not noted are to be considered existing to remain, typ. u.n.o.

3) All proposed exterior lighting shall be shielded to reduce or eliminate light pollution in compliance with applicable codes.

4) Pedestrian path of travel must meet current ADA requirements.

5) Any survey monuments within the area of construction shall be preserved or reset surveying in the State of California.

6) All improvements shall be constructed in accordance with the City of Fresno Standard Drawings and Specifications.

Keynotes

1 New trash enclosure, shared by commercial and residential tenants, per City of Fresno Standards P-33A, B, C. See 15, 16, 17/A17.
2 Dashed line indicates 3' bumper overhang over continuous curb per City of Fresno Parking Manual, typ.
3 New parking stall striping per City of Fresno Parking Manual, typ.
4 Dashed lines indicate turning radius for trash and fire access, typ.
5 Colored/stamped concrete in hatched area, typ.
6 Dashed line indicates 15' parking setback from curb/property line
7 Pedestrian access to trash enclosure
8 (E) tree to remain, protect from damage during construction, typ.
9 New drought tolerant shrub, typ.
10 New privacy hedge in raised planter
11 15' landscape transition buffer, exception requested due to proposed residential use permitted per letter from Dan Zack
12 (E) 6' CMU block wall to remain, typ.
13 Pavers in residential courtyard area, typ.
14 8' steel no-climb fence for residential security, typ. See 11, 19/A17 and 1, 2/A18.
15 Pedestrian access to residential portion of site, 4' wide metal gate per FFD requirements, typ. See 11, 19/A17 and 1, 2/A18.
16 Future EV charging stall, typ.
17 ADA van-accessible parking stall and loading area with concrete finish. Use ISA per detail 1/A17, typ. See also 2/A17 for striping pattern.
18 New straight-type curb ramp, see 5/A17, typ.
19 Striped crosswalk for ADA accessible path of travel
20 Planted area at grade, typ.
21 (E) metal pole light with concrete base to remain
22 (E) 6" concrete curb and gutter to remain
23 (E) median to remain
24 (E) sidewalk to remain
25 (E) planted area to remain
26 (E) curb ramp to remain
27 Sculpture by Owner
28 Connection to (E) bus stop along Palm Avenue, see 8/A17
29 Phase line, typ.
30 (E) property line to remain, typ.
31 (E) driveway to remain
32 Painted directional arrow, typ. See 12/A17.
33 New transformer, clearances and bollards as required by PG&E, see 13/A17.
34 Asphalt finish in residential parking area, per City of Fresno Standards P-41, 42 and 43, typ.
35 Truncated domes at bottom of ramp, typ. See 14/A17.
36 Freestanding mailbox unit
37 New ribbon-style bicycle rack with (2) bicycle capacity, min. See 18/A17.
38 Paint curb with "FIRE LANE NO PARKING"
39 Grey area of curb painted red "BUS ZONE" to remain
40 (E) pole-mounted bus stop signage to remain
41 (E) metal streetlight to remain
42 (E) wood power pole to remain
43 (E) public fire hydrant 75' north along Palm Ave.
44 (E) private fire hydrant 140' south in commercial parking lot
45 New 8' metal no-climb fence around residential parking area
46 New motorized sliding gate for vehicular access to residential parking area
47 New 6' wood fence for private yard, typ.
48 (E) manhole to remain
49 (E) sewer line to remain, assumed to feed subject property.
50 (E) 12" water line in Palm Avenue to remain
51 (E) water meter in underground box with 1" water service to remain
52 Area for backflow preventers and FDC/PIV
53 ADA parking sign, pole-mounted, see 3/A17
54 ADA parking sign, fence-mounted, sim to 3/A17
55 Entrance sign; see 4/A17
56 New concrete sidewalk, see 7/A17, typ.
57 Thick dashed line indicates 4' path of travel along (E) sidewalk
58 Pole light site fixture, shielded downward per CEC and FMC requirements, typ.
59 (E) CMU block trash enclosure to remain
60 (E) asphalt drive aisle to remain to provide access to (E) trash enclosure, this portion of site to remain on southern neighbor's property.
61 New location of property line to exclude (E) pole light fixtures from project area, to remain on southern neighbor's property, typ. of (2)
62 Property line to be adjusted to outside face of curb through LLA (lot line adjustment), in progress
63 Site furnishings by Owner, typ.
64. INSTALL A STATE STANDARD "STOP" SIGN.

PROVIDE RECORDED COPY PRIOR TO SITE PLAN SIGN-OFF

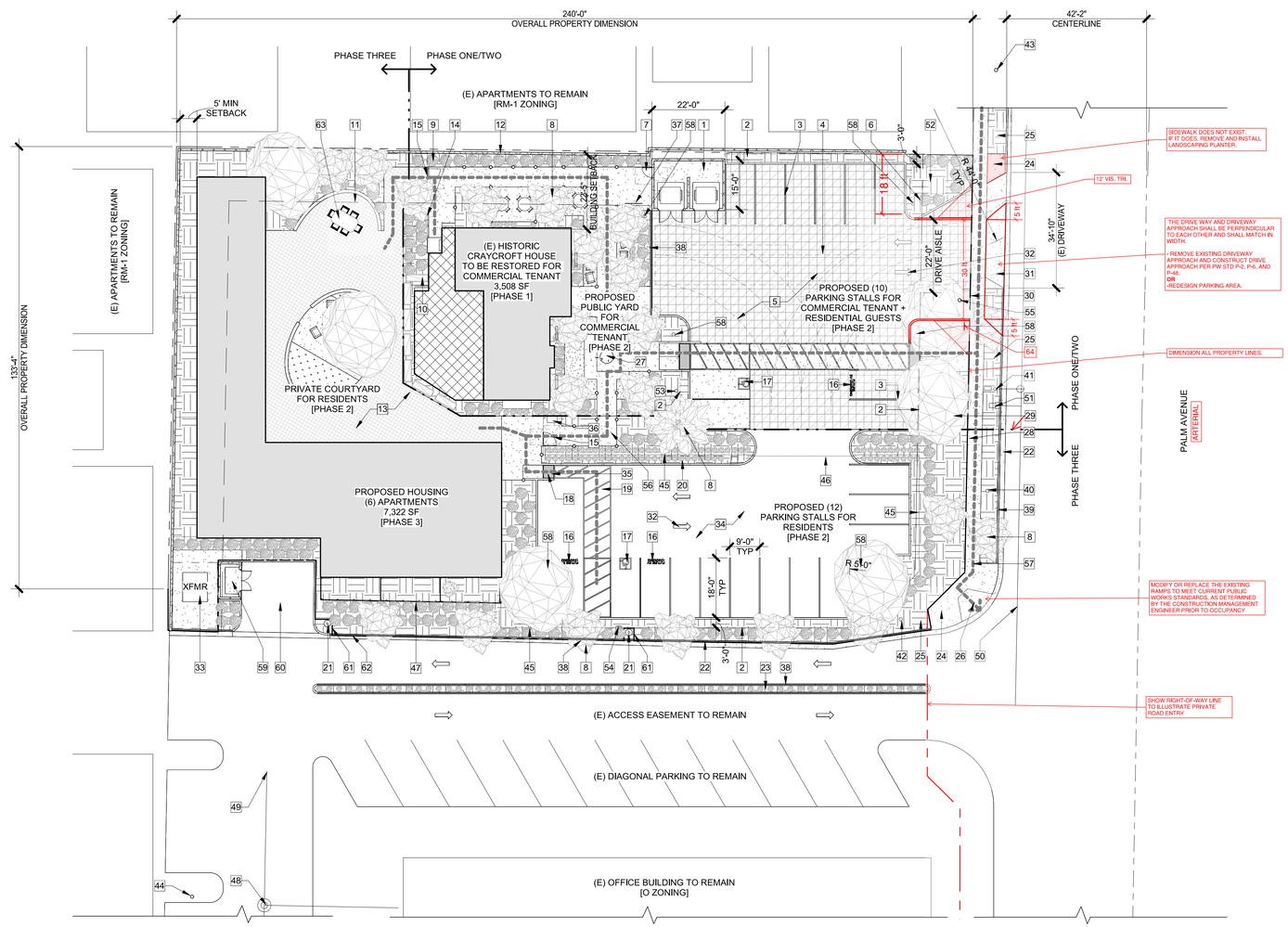

1 Site Plan
1" = 20'-0"

Legend

- Property Line
- Path of travel, 4' min. width
- Phase Line
- Centerline
- Dirt/planter
- Building
- Concrete finish
- Asphalt finish
- Truncated domes
- Paver finish
- Raised porch
- Colored concrete

PAUL HALAJIAN
ARCHITECTS
389 Clovis Ave, Suite 100
Clovis, CA 93612-1185
T: 559.297.7900 F: 559.297.7950
www.halajianarch.com

LICENSED ARCHITECT — NOT FOR CONSTRUCTION — STATE OF CALIFORNIA

PAUL HALAJIAN ARCHITECTS expressly reserves its common law copyright and other property rights specifically related to the contents of these plans. This document and the ideas and designs incorporated herein, as an instrument of professional service rendered by PAUL HALAJIAN ARCHITECTS, is not to be used in whole or in part for any other project without prior written authorization from PAUL HALAJIAN ARCHITECTS.

PROJECT:
Reza Assemi Site Development
6545 North Palm Avenue, Fresno, CA 93704

SHEET: Proposed Site Plan

DRAWING SET INFORMATION:

12.02.2021	DP Submittal

REVISIONS:

PROJECT NUMBER:
2017-34

SHEET NUMBER:
A3